FR 206 ECD | Regular Extension Drawer Slide

ECD

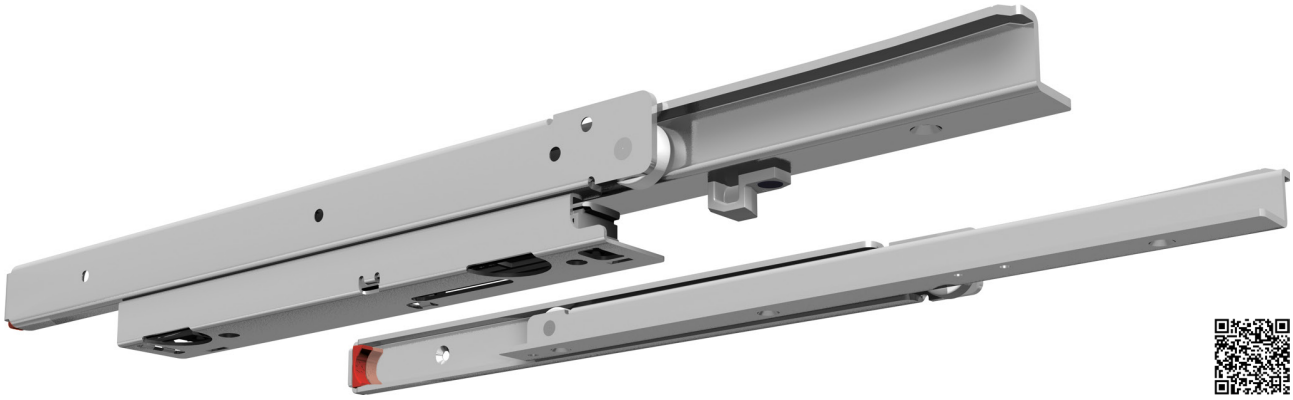

Specifications

- bottom mount
- 16.0 mm / 0.63 in.
- dynamic up to 100 kg / 220 lbs.
- steel ball bearings
- steel, zinc plated

Characteristics

- stay-closed feature
- out stop detent
- cabinet profile with synthetic stop

Dimensions

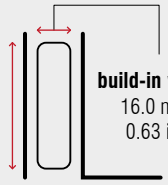

Length		Extension		Weight		Item No.
				per set		zinc plated
mm	**inch**	mm	inch	kg	lbs.	
400	**15.75**	294	11.57	2.25	4.96	▸ **1003521003**
450	**17.72**	344	13.54	2.48	5.47	▸ **1003571003**
500	**19.69**	394	15.51	2.71	5.97	▸ **1003641003**
550	**21.65**	444	17.48	2.93	6.45	▸ **1003741003**
600	**23.62**	494	19.45	3.15	6.94	▸ **1003781003**
650	**25.59**	544	21.42	3.38	7.44	**1003851003**
700	**27.56**	564	22.20	3.63	7.99	▸ **1003901003**
750	**29.53**	614	24.17	*	*	*
800	**31.50**	654	25.75	4.08	8.98	▸ **1004021003**
850	**33.46**	704	27.72	*	*	*
900	**35.43**	744	29.29	4.53	9.98	▸ **1004081003**
950	**37.40**	794	31.26	*	*	*
1,000	**39.37**	834	32.83	5.08	11.21	▸ **1004171003**

Packing Unit – Sets per Box, all Lengths: 2

▸ in stock | * on request