opk EUROPE

opk Perfect Slim 2023

1. Sliding Fittings

1.1 Single Door Fittings, 80 kg

Ordering No. :
04-000-101-001

SLIDING DOOR SYSTEM EXPERTS

1. Sliding Fittings

1.2 Middle Door Fittings (3 doors)

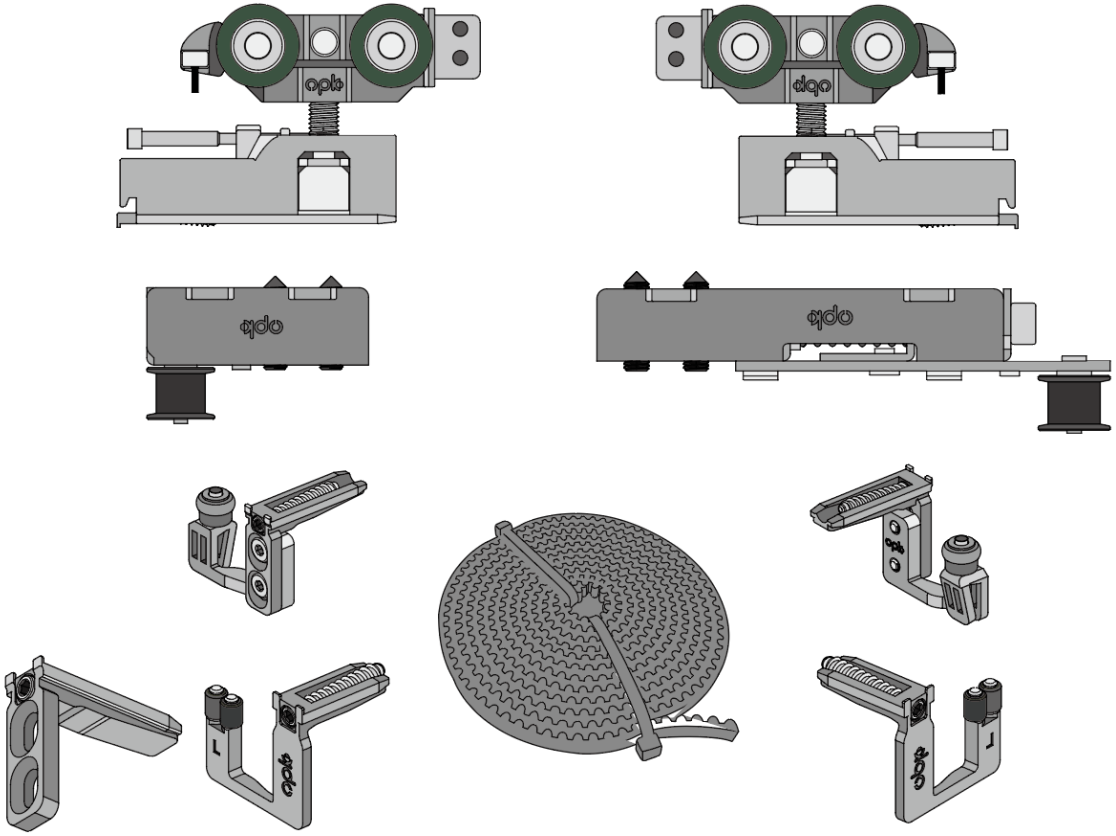

Ordering No. :
04-000-101-002

SLIDING DOOR SYSTEM EXPERTS

1. Sliding Fittings

1.3 Multiple Door Fittings (for ≥ 4 doors)

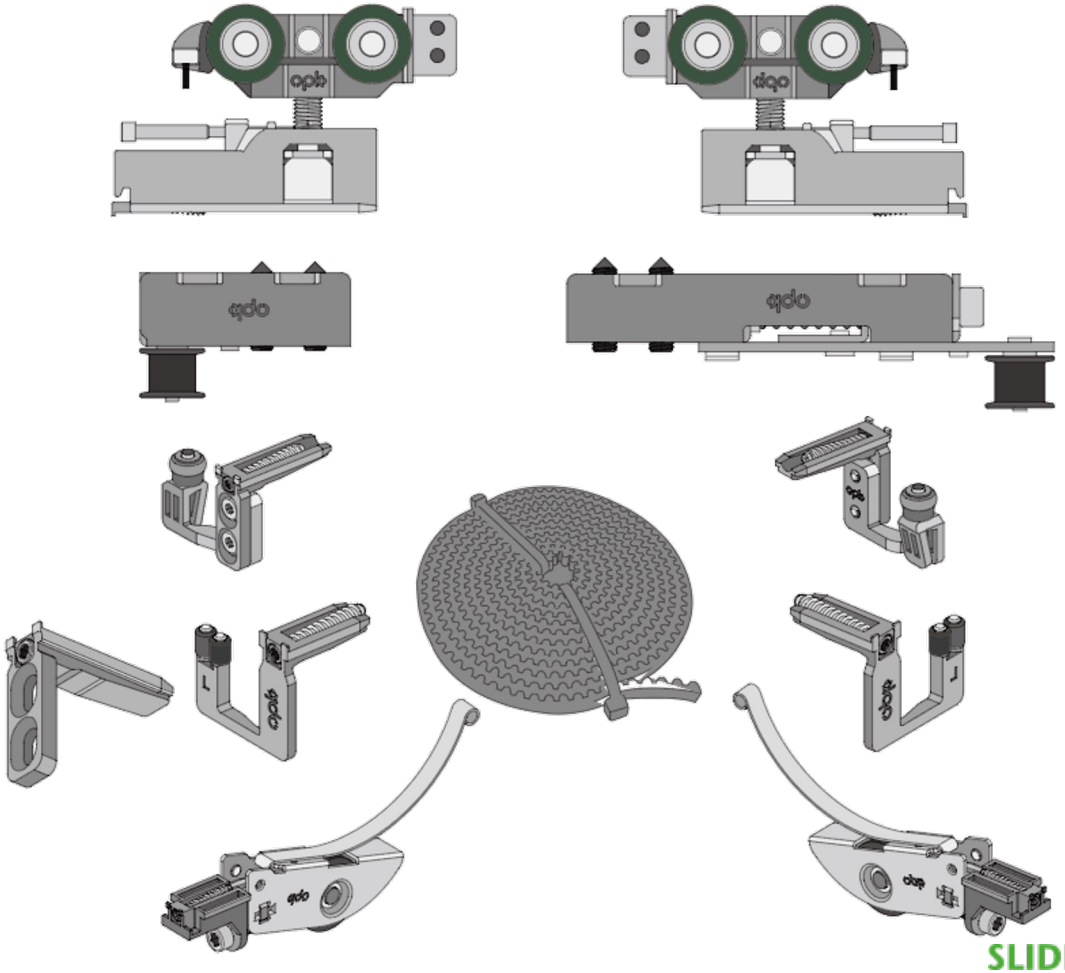

Ordering No. :
04-000-101-003

SLIDING DOOR SYSTEM EXPERTS

2. Track Systems

2.1 Single Running Track with Covers

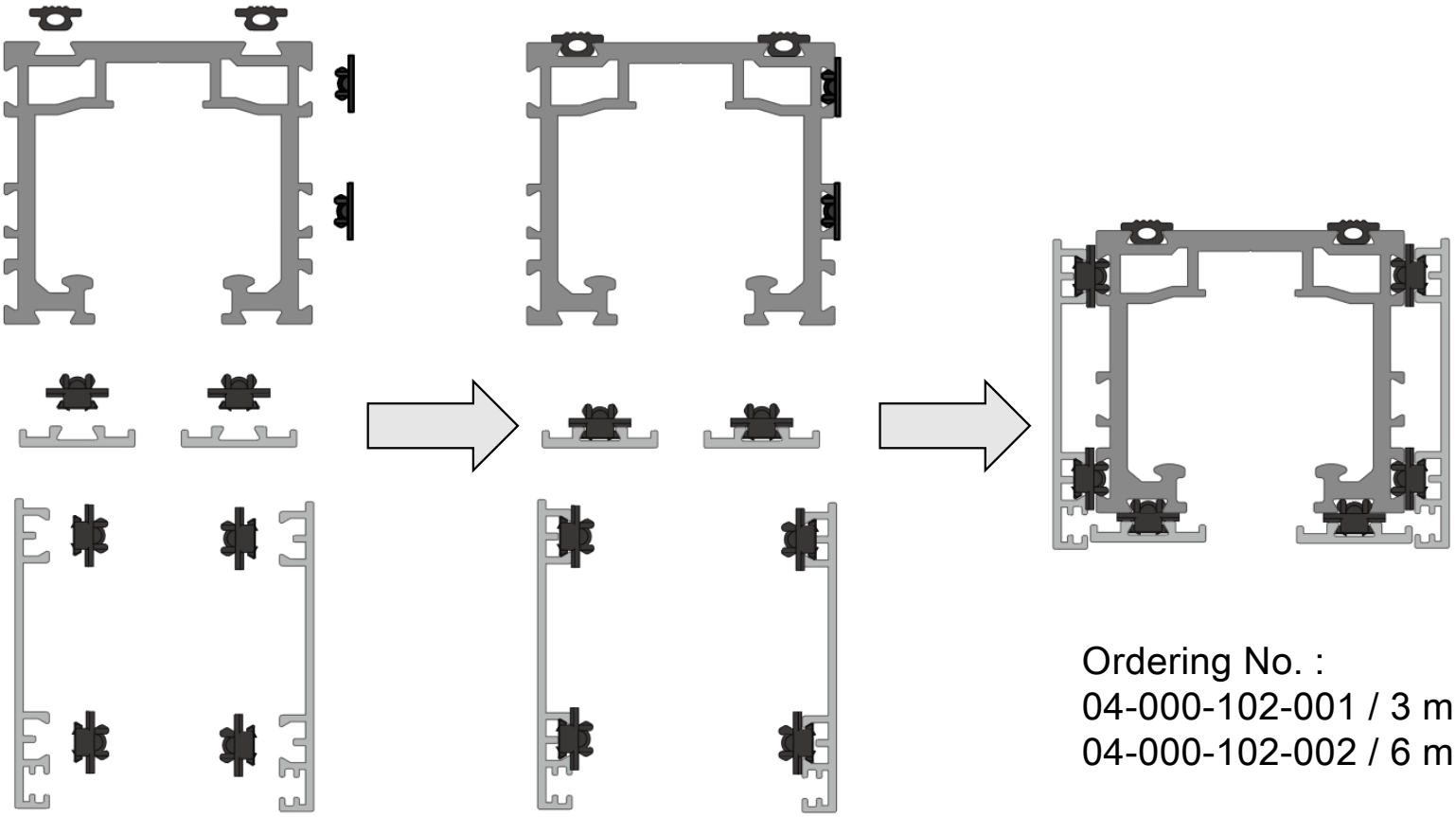

Ordering No. :
04-000-102-001 / 3 m
04-000-102-002 / 6 m

2. Track Systems

2.2 Single Running Track with Bottom Middle Cover （for ≥ 2 doors）

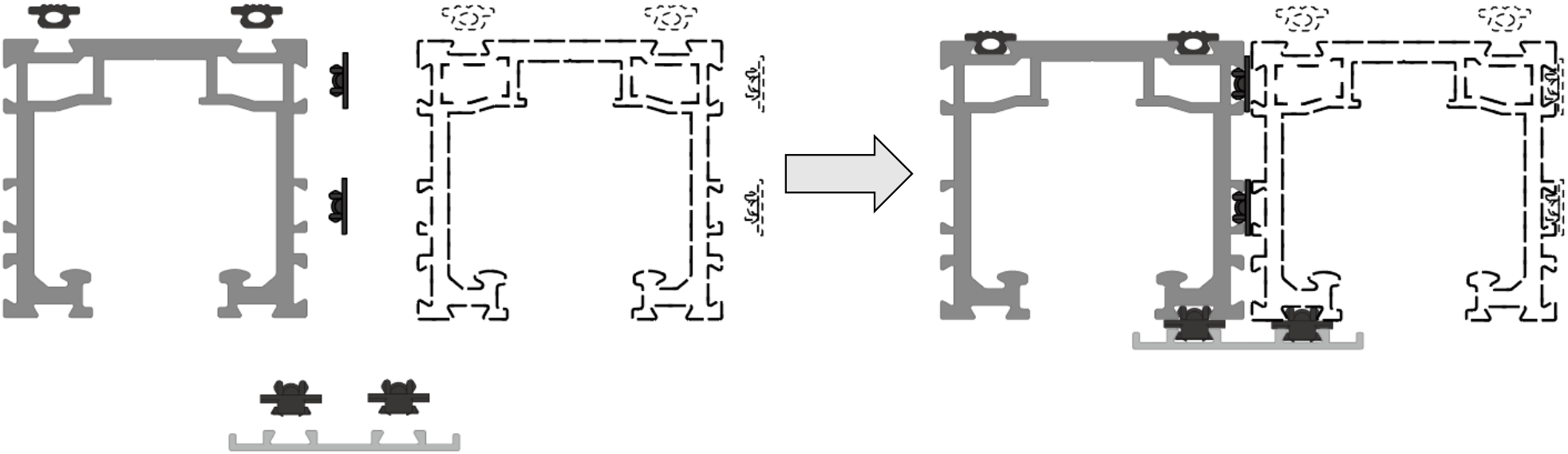

Ordering No. :
04-000-102-003 / 3 m
04-000-102-004 / 6 m

2. Track Systems

2.3 Wall Mounting 2,5 m

Ordering No. :
04-000-102-005

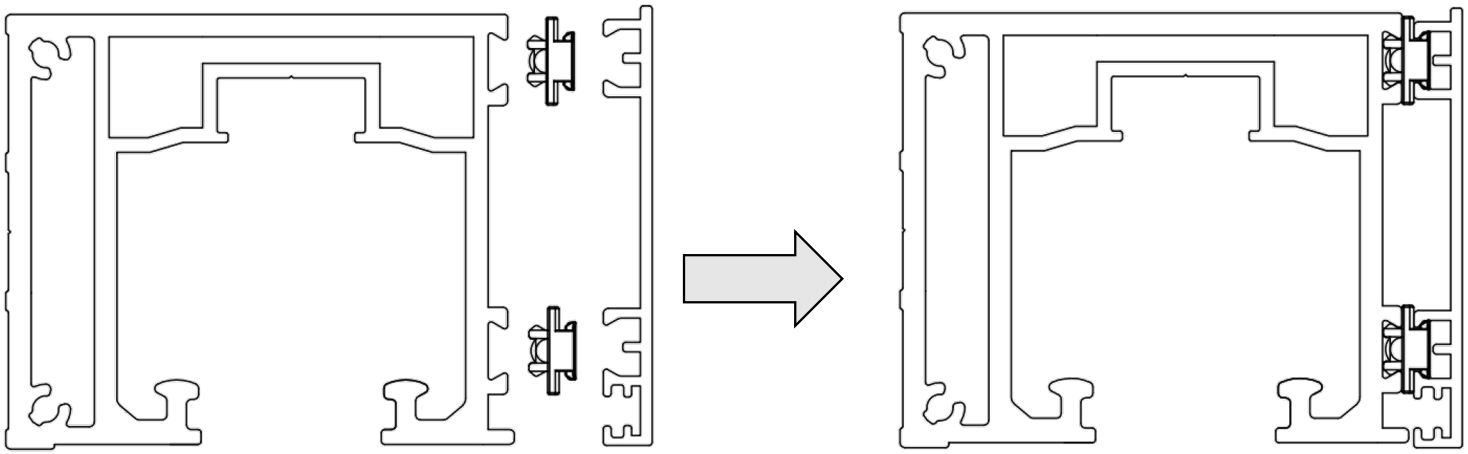

Ordering No. :
04-000-103-004

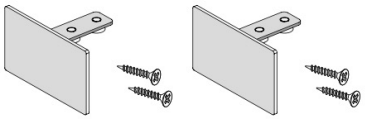

3. Door Frame Systems

3.1 Single Door System 3 m

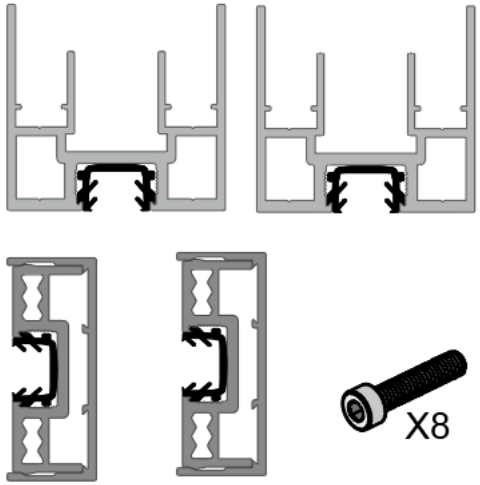

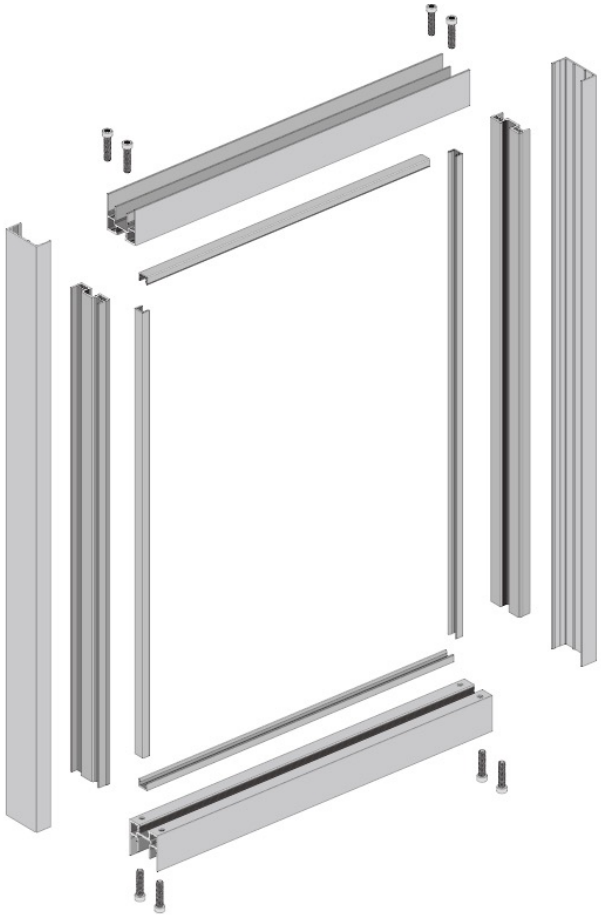

Ordering No. :
04-000-102-006

SLIDING DOOR SYSTEM EXPERTS

3. Door Frame Systems

3.2 Side Door of Stacking 3 m

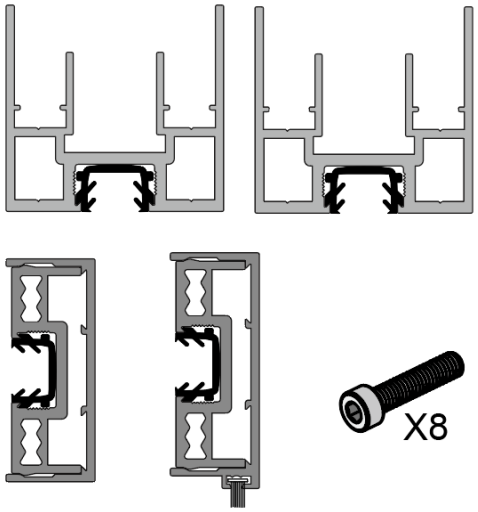

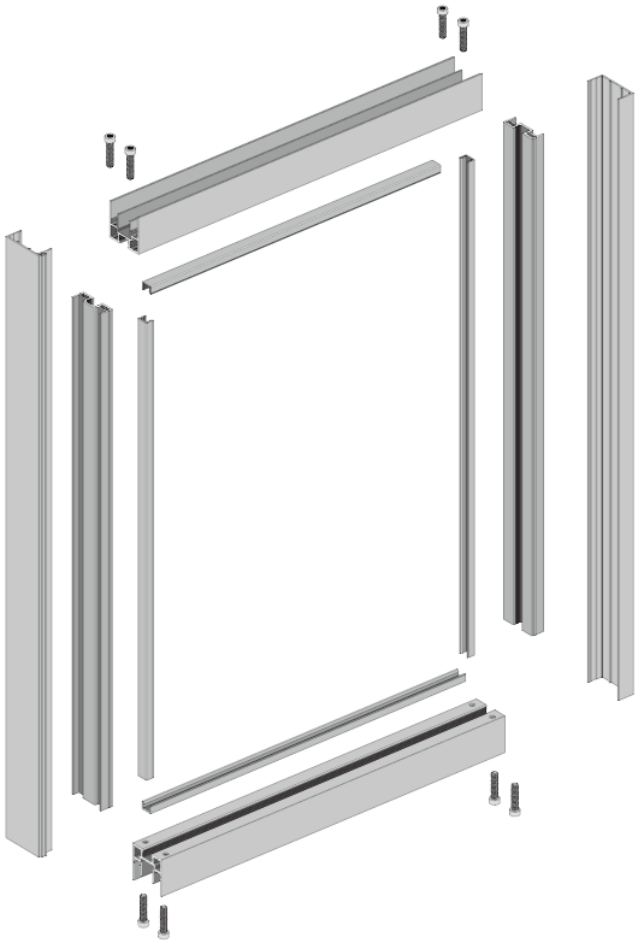

Ordering No. :
04-000-102-007

SLIDING DOOR SYSTEM EXPERTS

3. Door Frame Systems

3.2 Middle Door of Stacking 3 m

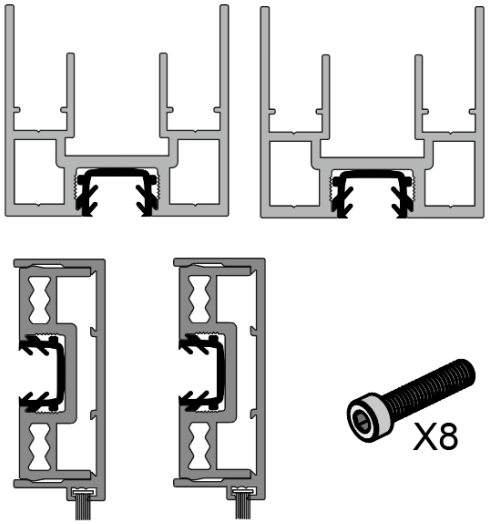

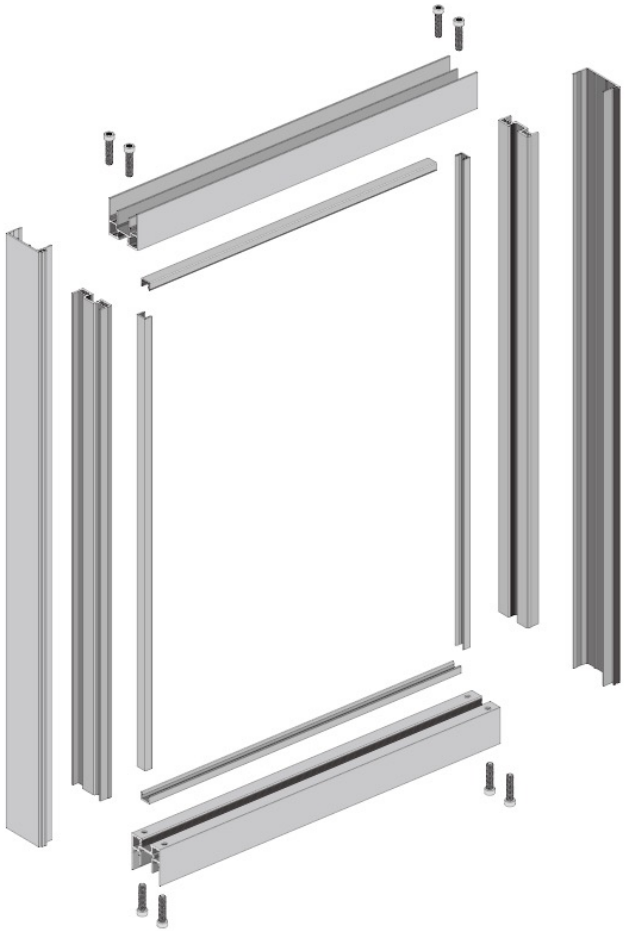

Ordering No. :
04-000-102-008

SLIDING DOOR SYSTEM EXPERTS

4. Perfect Whole Door Configuration

4.1 One Door Configuration

Whole Door Configuration

= Sliding Fittings+Track Systems+Door Frame Systems

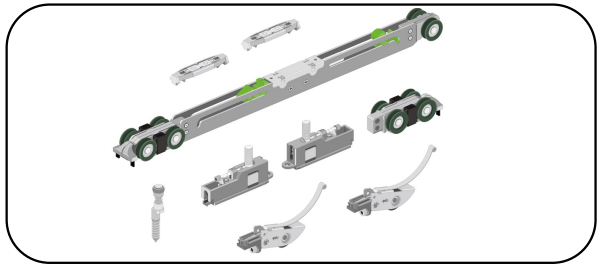

1 x

Ordering No. :
04-000-101-001

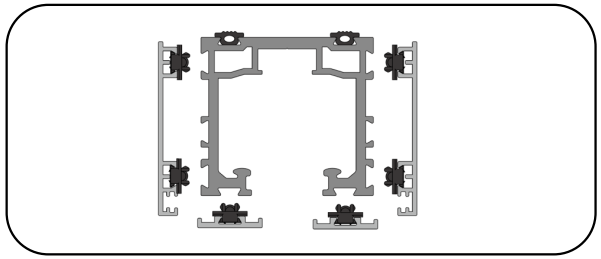

1 x

Ordering No. :
04-000-102-001 / 3 m
04-000-102-002 / 6 m

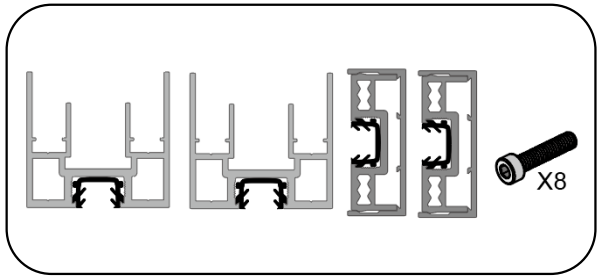

1 x

Ordering No. :
04-000-102-006

4. Perfect Whole Door Configuration

4.2 Two Doors Configuration

Whole Door Configuration

= Sliding Fittings+Track Systems+Door Frame Systems

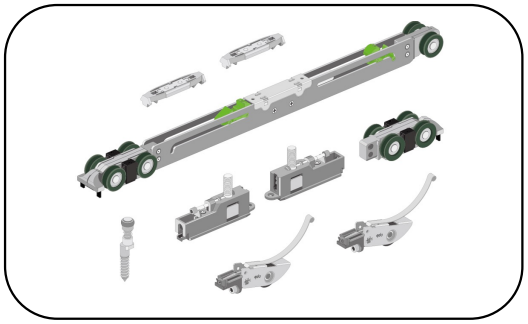

2 x Ordering No. :
04-000-101-001

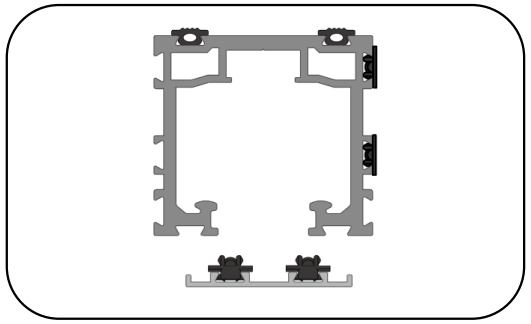

1 x Ordering No. :
04-000-102-003 / 3 m
04-000-102-004 / 6 m

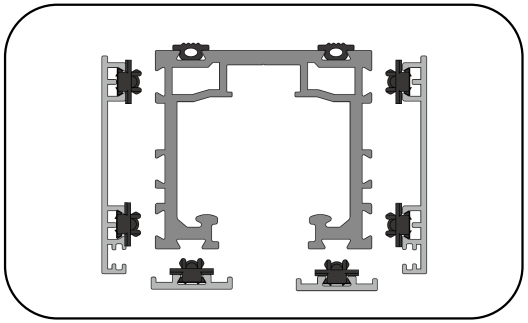

1 x Ordering No. :
04-000-102-001 / 3 m
04-000-102-002 / 6 m

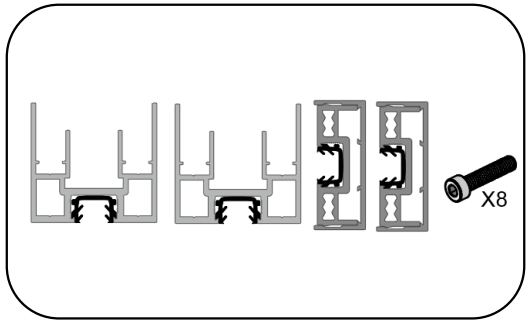

2 x Ordering No. :
04-000-102-006

4. Perfect Whole Door Configuration

4.3 Three Doors Configuration

Whole Door Configuration

= Sliding Fittings+Track Systems+Door Frame Systems

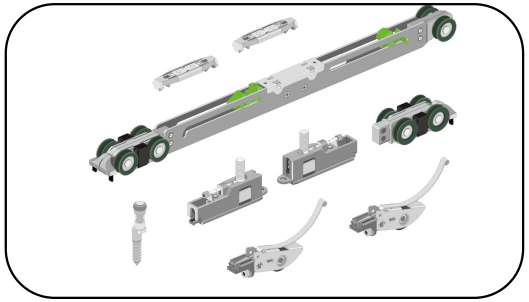

2 x Ordering No. :
04-000-101-001

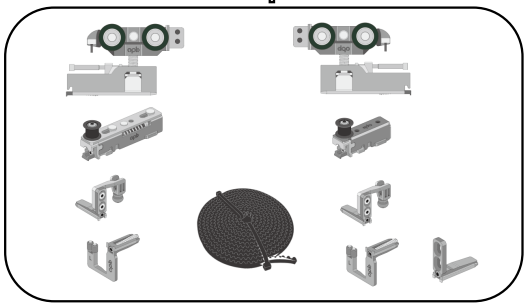

1 x Ordering No. :
04-000-101-002

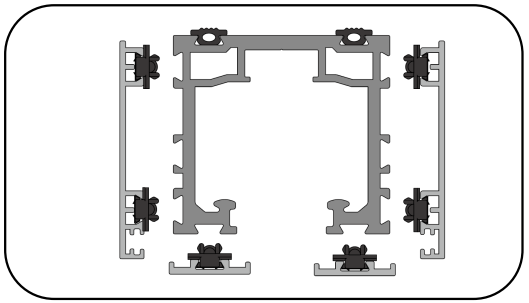

1 x Ordering No. :
04-000-102-001 / 3 m
04-000-102-002 / 6 m

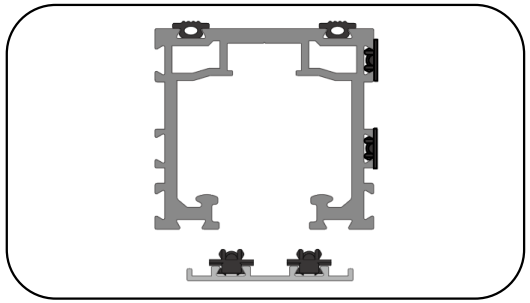

2 x Ordering No. :
04-000-102-003 / 3 m
04-000-102-004 / 6 m

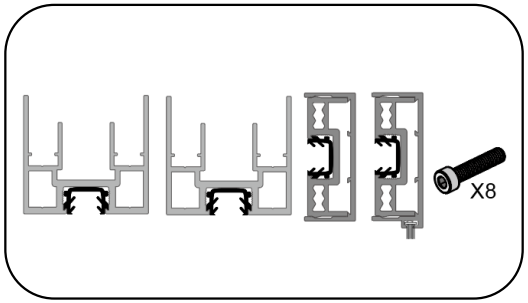

2 x Ordering No. :
04-000-102-007

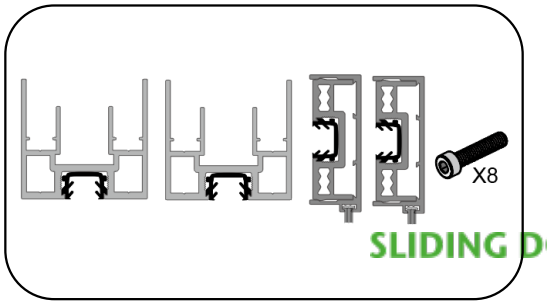

1 x Ordering No. :
04-000-102-008

SLIDING DOOR SYSTEM EXPERTS

4. Perfect Whole Door Configuration

4.4 Four Doors Configuration

Whole Door Configuration

= Sliding Fittings+Track Systems+Door Frame Systems

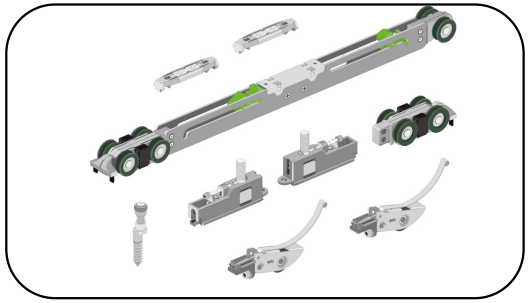

2 x Ordering No. :
04-000-101-001

+

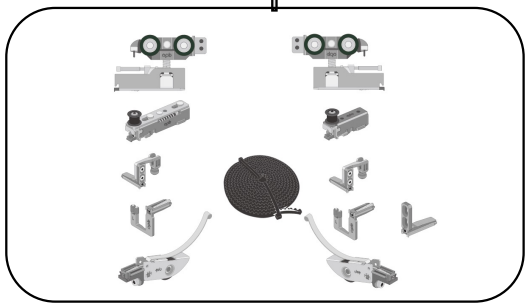

2 x Ordering No. :
04-000-101-003

+

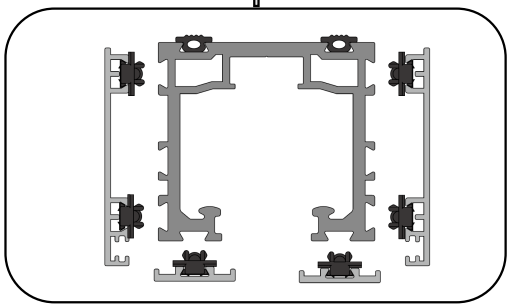

1 x Ordering No. :
04-000-102-001 / 3 m
04-000-102-002 / 6 m

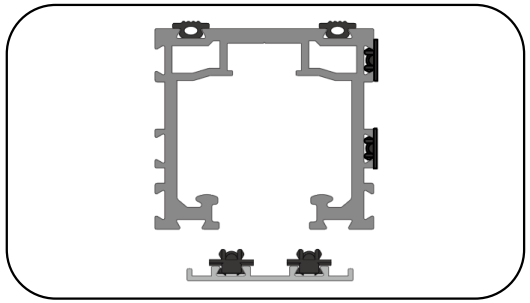

3 x Ordering No. :
04-000-102-003 / 3 m
04-000-102-004 / 6 m

+

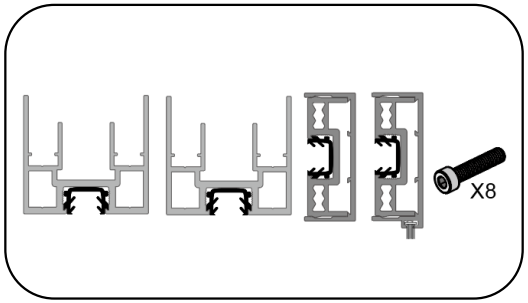

2 x Ordering No. :
04-000-102-007

+

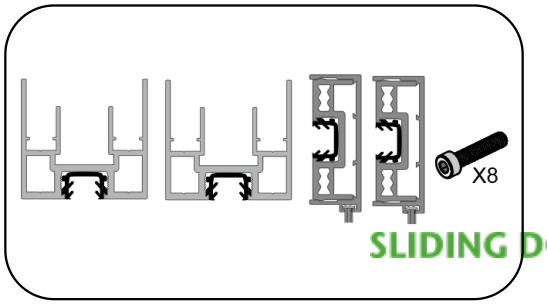

2 x Ordering No. :
04-000-102-008

SLIDING DOOR SYSTEM EXPERTS

4. Perfect Whole Door Configuration

4.5 Five Doors Configuration

Whole Door Configuration

= Sliding Fittings+Track Systems+Door Frame Systems

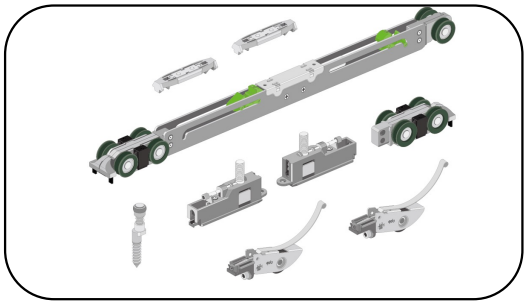

2 x Ordering No. :
04-000-101-001

+

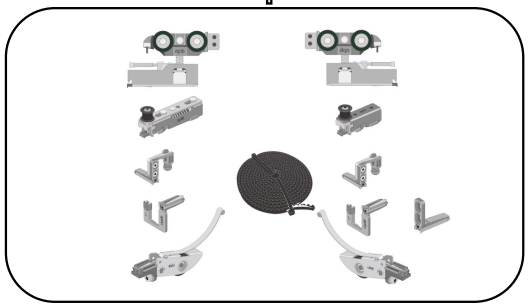

3 x Ordering No. :
04-000-101-003

+

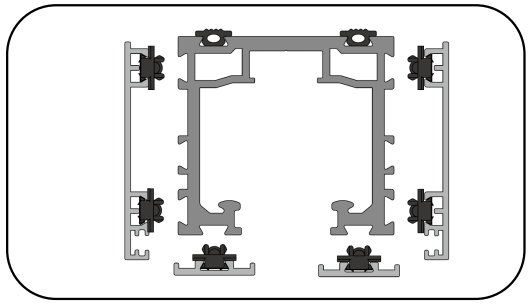

1 x Ordering No. :
04-000-102-001 / 3 m
04-000-102-002 / 6 m

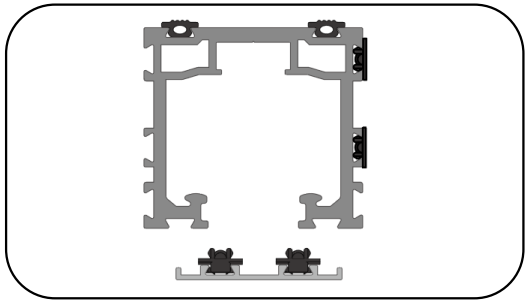

4 x Ordering No. :
04-000-102-003 / 3 m
04-000-102-004 / 6 m

+

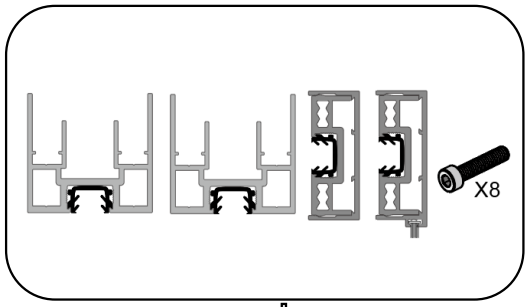

2 x Ordering No. :
04-000-102-007

+

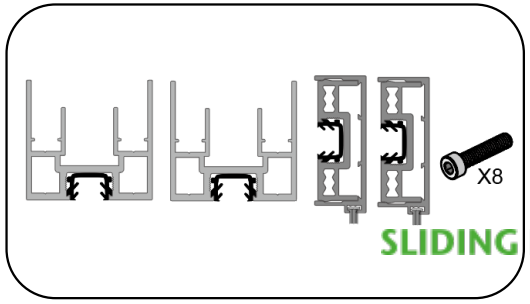

3 x Ordering No. :
04-000-102-008

SLIDING DOOR SYSTEM EXPERTS

4. Perfect Whole Door Configuration

4.6 Wall Mounting Single Door Configuration

Whole Door Configuration

= Sliding Fittings+Track Systems+Door Frame Systems

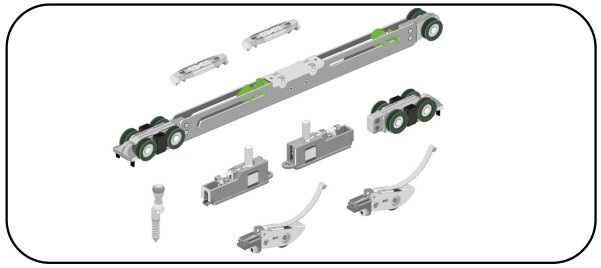

1 x Ordering No. :
04-000-101-001

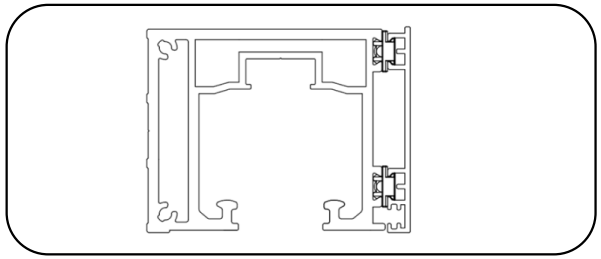

1 x Ordering No. :
04-000-102-005

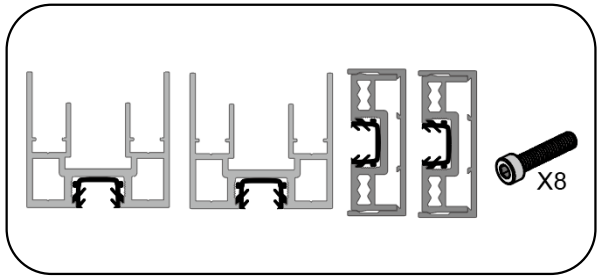

1 x Ordering No. :
04-000-102-006

5. Stacking fittings_ Three Doors up to 10 Doors

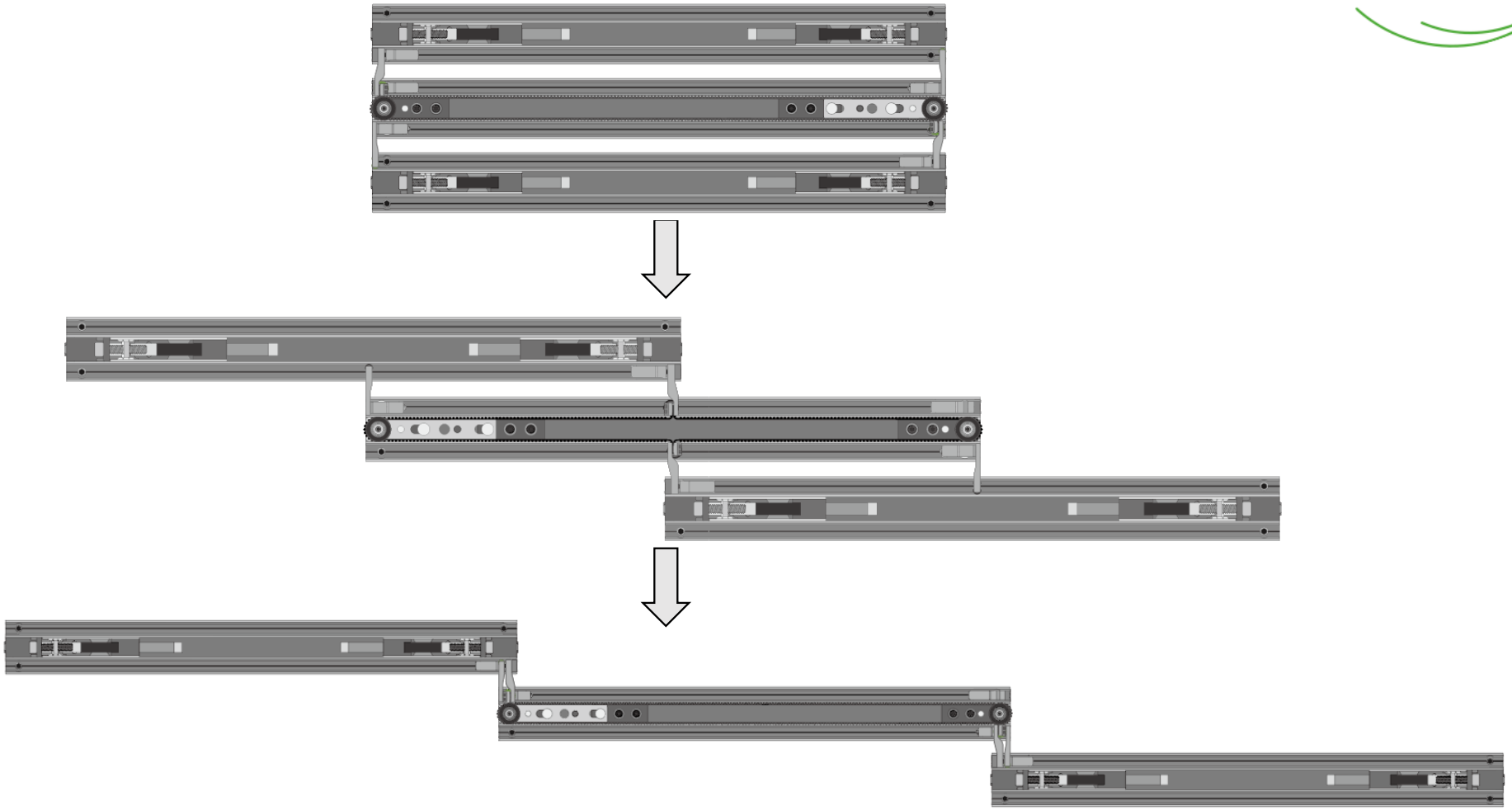

SLIDING DOOR SYSTEM EXPERTS

6. Tools – Starterset 119 € Netto

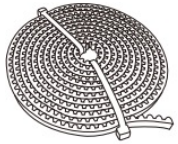
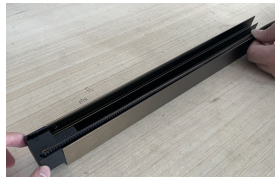

Ordering No. :
04-099-000-001

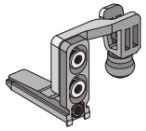

Ordering No. :
04-099-000-002

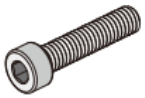

Ordering No. :
04-099-000-004

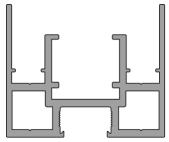
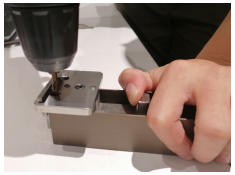

Ordering No. :
04-099-000-003

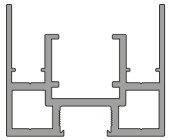

Ordering No. :
04-099-000-005

SLIDING DOOR SYSTEM EXPERTS

Thank you for your attention!

SLIDING DOOR SYSTEM EXPERTS

OPK EUROPE GmbH
Junghansstr. 16
72160 Horb a. N. Germany
www.opk-europe.com