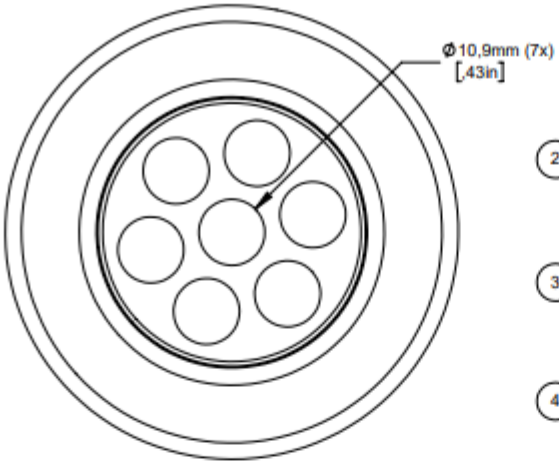

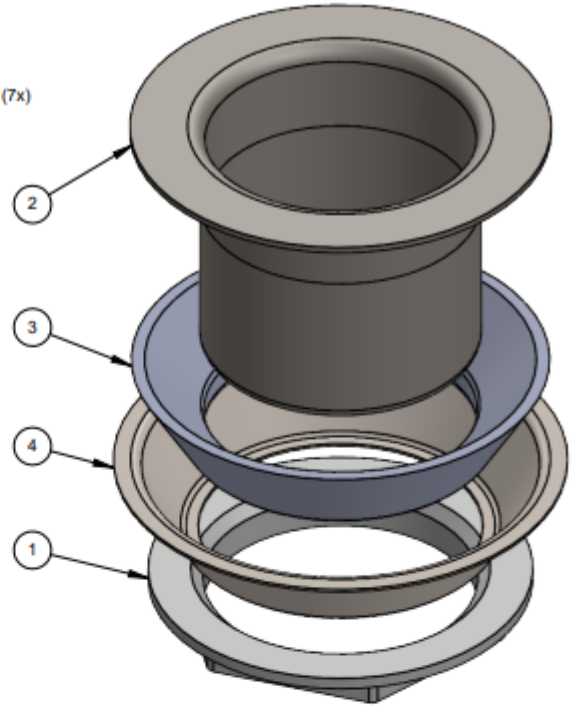

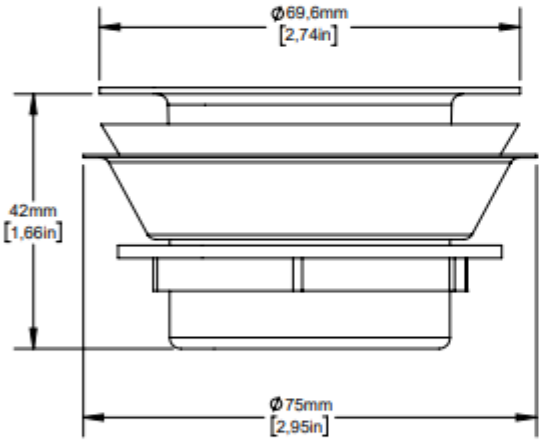

ITEM NO.	DESCRIPTION	QTY.
1	Flange Nut E18-1500 1 1/2-11 BSP	1
2	SELF-SEAL MINI-DUO s/s DRAIN BODY E18 1 1/2"-11BSP	1
3	Seal for Self-Seal 1 1/2" Mini-Duo Drain	1
4	Seal Ring	1

PROPRIETARY AND CONFIDENTIAL

THE INFORMATION CONTAINED IN THIS DRAWING IS THE SOLE PROPERTY OF COMPONENT HARDWARE GROUP. ANY REPRODUCTION IN PART OR AS A WHOLE WITHOUT THE WRITTEN PERMISSION OF COMPONENT HARDWARE GROUP IS PROHIBITED.

MODEL #: E18-1500-4 _cust

REV.

MATERIAL: Drain body: AISI 430

PART #: E18-1500-4_cust

FINISH:

WEIGHT: 147 grams

	NAME	DATE
DRAWN	MdR	11-5-2018

SALES DRAWING

TITLE: Self-Seal Mini-Duo Drain S/S 1 1/2"BSP

THIRD ANGLE PROJECTION

A4 SIZE

CLASS:

SCALE: 1:1

SHEET 1 OF 1