PRE RINSE SPRAY UNITS
WATER TAPS
SENSOR TAPS
BAR COUNTER TAPS
INFLOW TAPS
SAFETY HINGES FOR LIDS
DRAIN VALVES
SAFETY VALVES
HOSE REEL SYSTEMS

echtermann®
for professionals

Comfort Clean

- Stainless steel 316L
- Small Dimensions
- Free stand, no wall bracket
- High class, matt design
- E.g. for front of the house – show cooking – bar area – fish/meat prep - high standard private homes
- 15 years warranty on stainless steel body

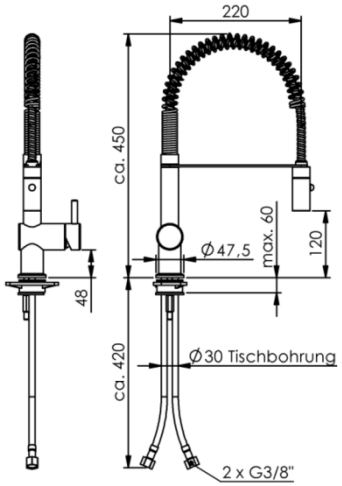

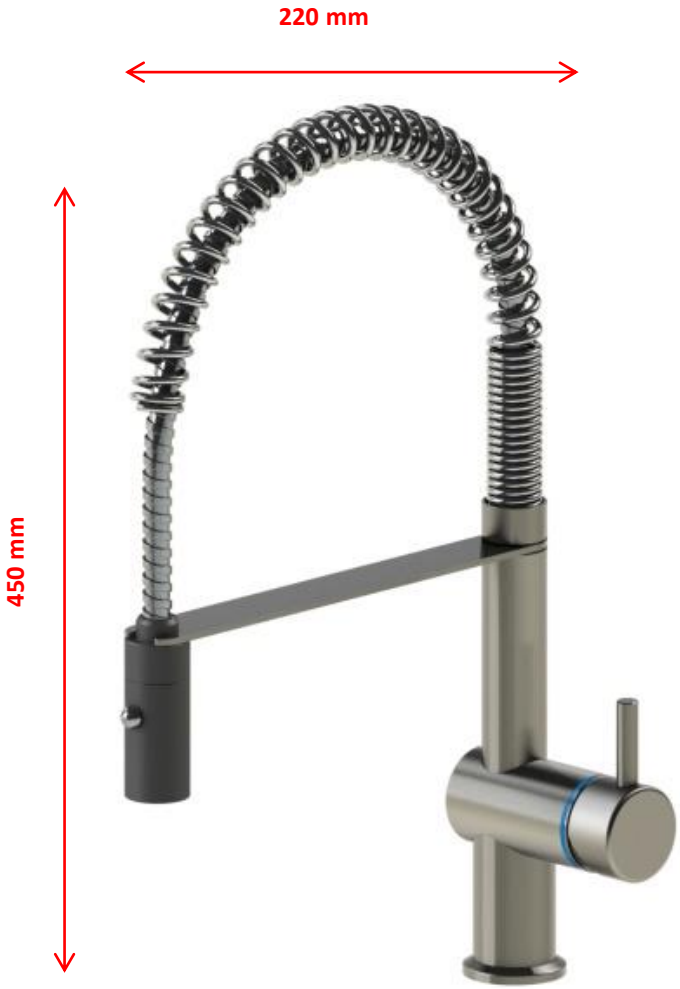

echtermann®
for professionals

Comfort Clean

- Professional components:
- Spring-steel
- Hose - Stainless Aggraf-Winding
- TOP CLEAN single-lever mixer tap
- Eco cartridge with 50 % water consumption

echtermann®
for professionals

Comfort Clean

- Robust metal spray head
- Heat isolated and adjustable
- Normal water jet + shower/spray function
- Black „soft touch coating“
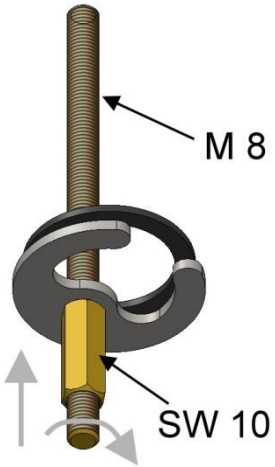
- Quick and easy to install