GOODS **STOCKED.**
2017

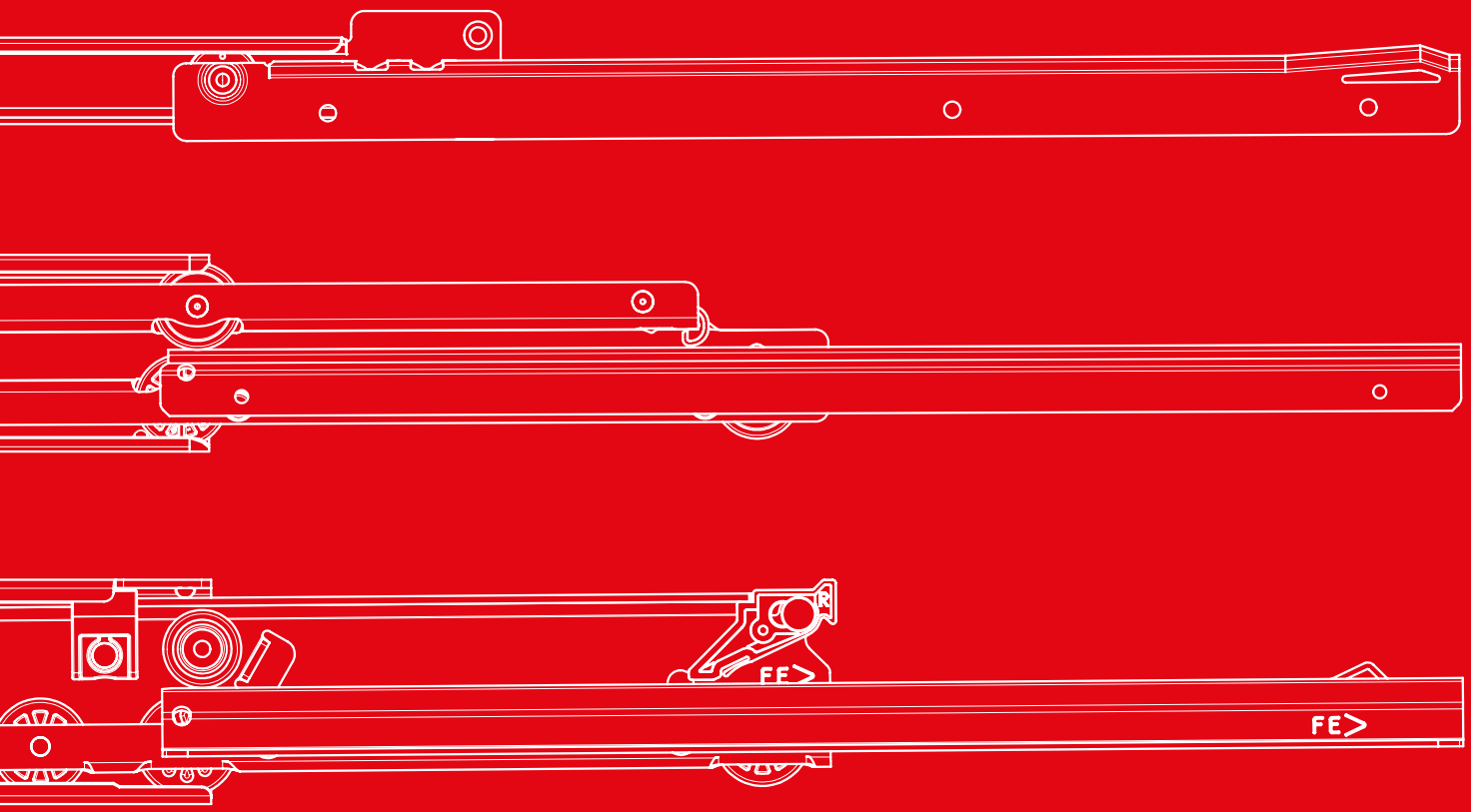

Fulterer®
DRAWER SLIDE SYSTEMS

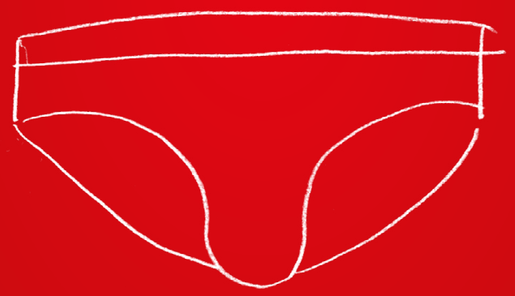

How it all started.

On trout and underpants.

The good old fifties. Austria joins the Council of Europe, Grace Kelly flickers in black and white across TV screens and Bing Crosby crackles over the short-wave radio. People were called either Karl, Oskar, Sonja or Gertrud, and were proudly shaking away the cobwebs in the advancing reconstruction period, while they sat in their cocktail chairs and chatted about the „miracle of Bern“, the 3-2 victory over Hungary in the 1954 World Cup.

It is about halfway through this fine decade when one such Karl (an underwear manufacturer by trade, from Lustenau) sits fishing with his friend Oscar (a steel industrialist) in the forest near Bregenz. And as it is with fishing, they have plenty of time to chat. And as it is in Vorarlberg, they enjoy talking a lot about business. Then Consul Oscar Merz-Meyer suggests to his friend Dr. Karl Fulterer that he should quit his business, namely the „knickers business“ and devote himself to the (far more lucrative) steel industry.

Dr. Karl, who has a nose for business, immediately picks up the scent and, in addition to the three magnificent trout that he catches that day, he gets the feeling that he has landed a much juicier fish when in that same year he establishes his new company, and from then on produces drawer slides.

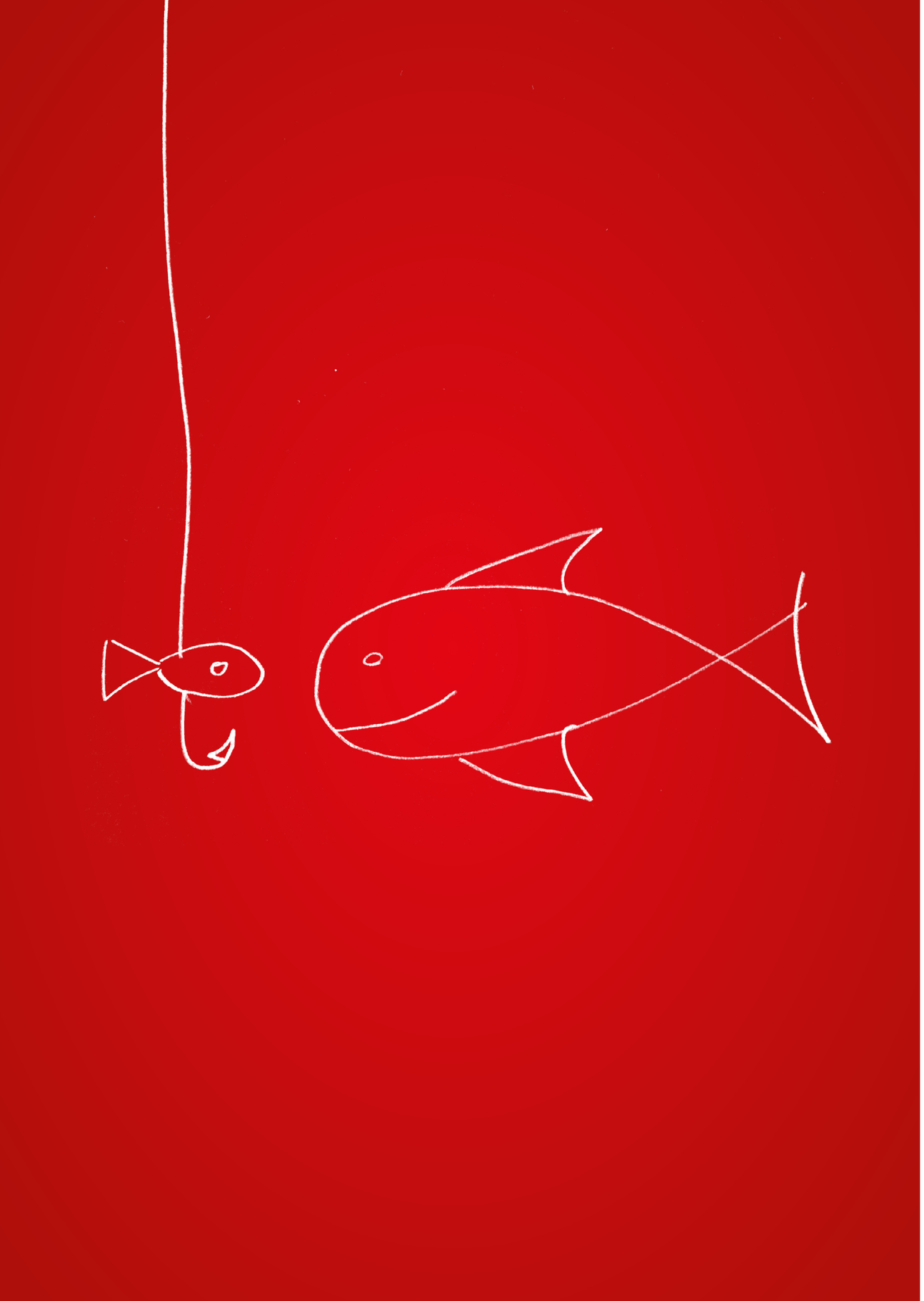

Innovations.

Good products are created as a result of proximity to the market.

We develop our products in close and intensive conversation with users. Our primary aim is to produce solutions that offer added value when applied, and we are continually registering new patents for exclusive products with additional benefits.

We invest continuously in our production plants and tool technology, enabling us to guarantee high quality at equally economical prices.

Flexibility and innovation – that means the optimum product is developed in conjunction with, and for, our clients. If they cannot find the right drawer slide system in the standard range, they can turn to our in-house engineering department. That's where special products are developed to meet the client's particular requirements. Prototypes are thoroughly trialled using simulation programmes and in test laboratories before the green light is given for production.

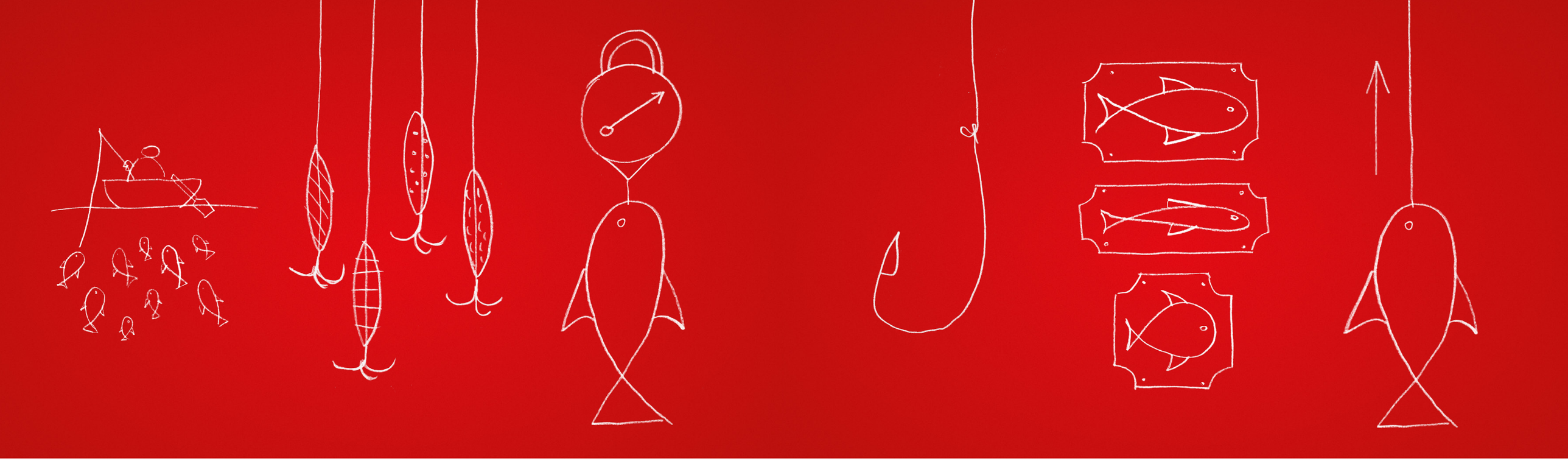

Sales.

In the right place at the right time.

Wherever you are, we're there too. We supply all our products direct to industry and through the trade to smaller fabricators and installers. Our field staff will provide you with authoritative advice about our products and their uses.

In addition to the standard range of goods and services, our service also includes the production of client-specific special solutions in drawer technology.

Technical Overview.

It's all down to the equipment.

Our drawer systems are categorised into the following groups, depending on their construction:

- **Drawer Slides with rollers:**
  The „runner element" is formed in this case by nylon rollers, steel ball bearings or delrin* encased steel ball bearings.
- **Ball Bearing Drawer Slides:**
  The runner element is made up of steel balls running in a ball cage.
- **Pantry Pull Out Slides**

Load-carrying capacity.

How much you can expect of us.

Generally, the load capacity is indicated by the values for the highest permissible dynamic load. It is defined as the weight which a guide pair can hold when being pulled out or pushed in. But: These values only apply with the use of suitable fasteners at all intended fastening positions.

For the following dimensions, the specified load capacity values of each pull-out system with the highest permissible dynamic load are:

- **Drawer slides with roller guide** for **600 mm pull-out length** and **450 mm drawer width.**
- **Drawer slides with ball guide** for **450 mm pull-out length** and **450 mm drawer width.**
- In case of **longer pull-outs (up to 1000 mm),** the load capacity is **reduced by approx. 20%.**

Important: For optimal results, the drawer should not be wider than the nominal length of the guide of each pull-out. If the drawer is extra-wide and pushed in on the end sides (not centrally!), it might get jammed.
We recommend to test the entire system with the intended application.

Attachments.

We won't let you down.

There are standard solutions for the attachment of drawer runners, as well as special solutions on request:

- **Holes:** round, elongated or key-hole. Always in the centre of the rail, so that the screw heads do not foul the rollers.
- **Bayonet fitting:** rapid assembly method for fitting to metal furniture. In various models, which can be fitted as required
- **Hook-in claws:** rapid assembly method for fitting rails in cupboards**.**
- **Assembly brackets:** used for system drawers. Various options for fitting to wood or metal
- **Angle bracket:** used for attaching rails below work surfaces, such as in the case of suspended drawers or suspended shelves.

Installation.

How to mount.

On the carcass: The drawer systems are (for the most part) screwed to the side panel of the unit carcass, usually in the 32 mm hole row.

On the drawer: There are two options for fitting to the drawer:

- **On top:** The drawer sits on top of the rail. This version is available for drawer slides with rollers and ball bearing drawer slides.
- **On the side:** The rail is attached to the side of the drawer. This version is available for drawer slides with rollers and ball bearing drawer slides.

Self-closing.

Almost of their own accord.

Many of our products are equipped with **self-closing** or **self-retracting features (spring mechanism).** The effect of both versions is that the drawer closes of its own accord in the last part of the closing process, and does not bounce back. Details can be found in each case in the „Specifications" section.

ECD retraction damping system: It's the small things that make life easier. With a retraction damping system drawers close gently and quietly of their own accord, whether full or empty. Fulterer drawer slide systems can also be retrofitted with an Easy Close Device at any time.

Available for the following temperature ranges:

ECD	+5°C	to	+40°C (standard)
ECD	-10°C	to	+10°C
ECD	-25°C	to	-5°C

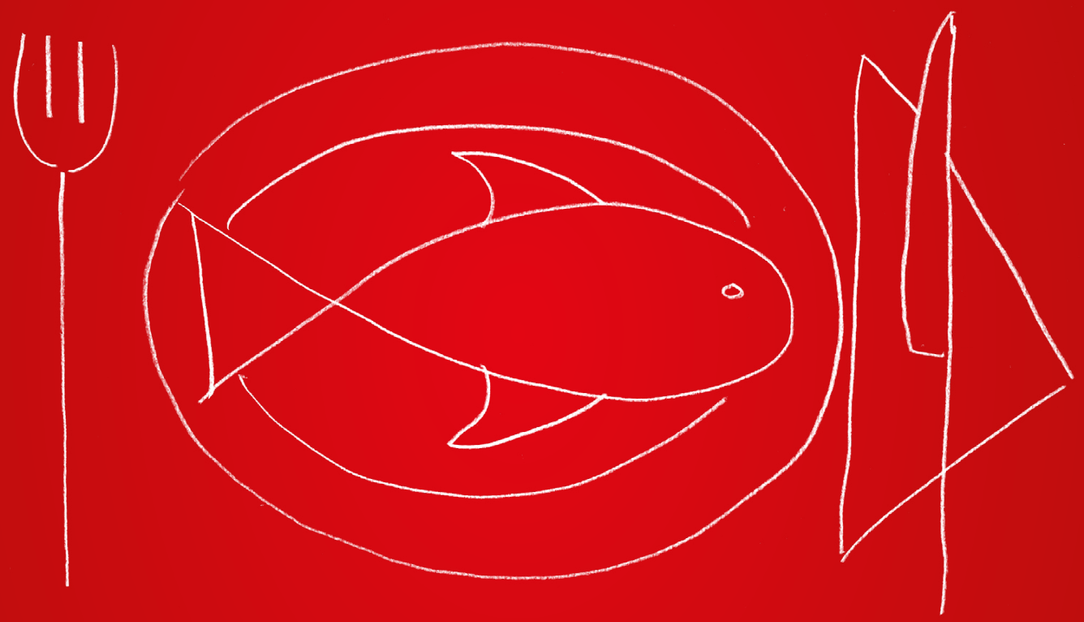

Applications.

Our drawer slide systems have a wide range of areas of application. They are suitable for the home as well as – in the chrome steel versions – for applications where hygiene is a critical factor, such as in kitchens, pharmacies or doctors‘ surgeries, as well as for filing cabinets and vertical cupboards for office furnishings.

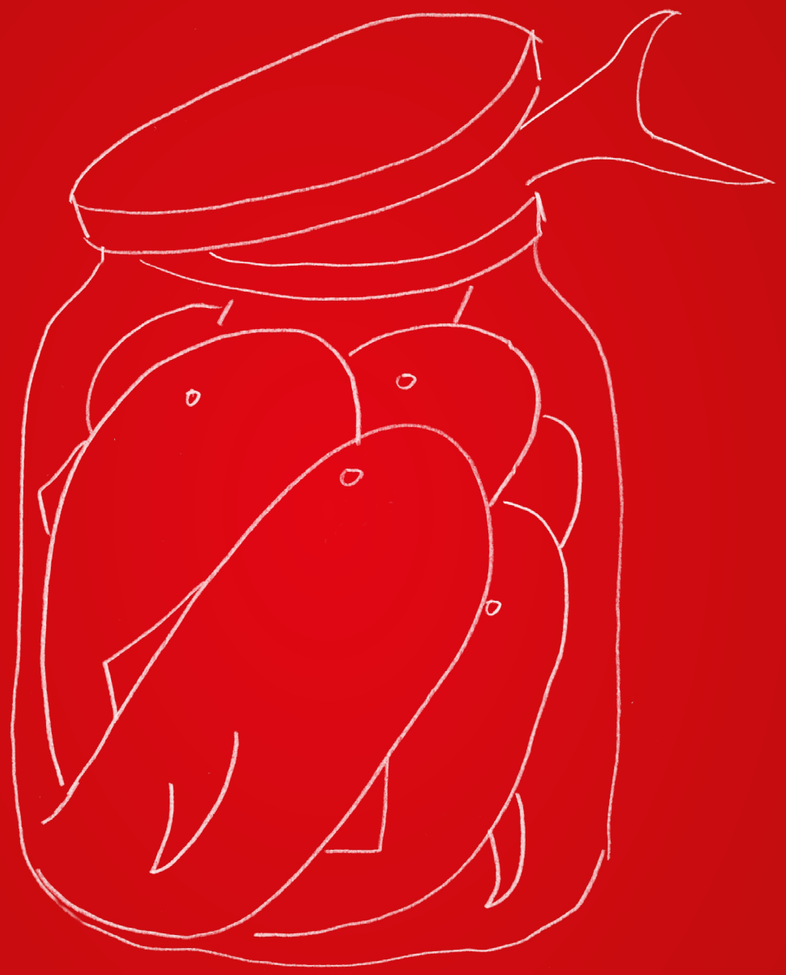

Contents.
And now let‘s get down to the nitty-gritty.

TYPE	MODEL	MOUNT	WIDTH	CAPACITY	PAGE
	REGULAR-EXTENSION DRAWER SLIDES				**10**
Regular-Extension	**FR 2021**	Bottom Mount	12 mm	35 kg	**12**
	FR 2022	Bottom Mount	12 mm	30 kg	**13**
	FR 2026	Bottom Mount	12 mm	40 kg	**14**
	FR 2071	Bottom Mount	15 mm	70 kg	**15**
	FR 206	Bottom Mount	16 mm	100 kg	**16**
	FR 206 ECD	Bottom Mount	16 mm	100 kg	**17**
	FR 311	Top Mount	14 mm	30 kg	**18**
	FR 6000-T	Side Mount	15 mm	30 kg	**19**
Mounting Jig	**Fulfix**				**20**
Sliding absorption system	**FR 8001 ECD**	Side Mount	12,5 –15 mm	30 kg	**21**
Sliding absorption system	**FR 8003 ECD**	Side Mount	12,5 –15 mm	70 kg	**22**
	FULL-EXTENSION DRAWER SLIDES				**24**
Telescopic-Action	**FR 6500**	Bottom Mount	12 mm	50 kg	**26**
	FR 6010	Side Mount	15 mm	50 kg	**27**
Progressive-Action	**FR 786 ECD**	Bottom Mount	18 mm	55 kg/40 kg	**28**
	FR 791	Bottom Mount	18 mm	60 kg/45 kg	**29**
	FR 7180	Bottom Mount	24 mm	200 kg	**30**
Telescopic-Action	**FR 5000**	Side Mount	12,7 mm	45 kg	**31**
Side Mount Bracket f. FR 5000	**FR 5000 ASW**	Side Mount	14 mm		**32**
Telescopic-Action	**FR 5001 ECD**	Side Mount	12,7 mm	40 kg	**33**
	FR 5002 CNS	Side Mount	12,7 mm	45 kg	**34**
	FR 5036	Side Mount	12,7 mm	30 kg	**35**
	FR 5052	Side Mount	12,9 mm	90 kg	**36**
	FR 5400	Side Mount	19,1 mm	250 kg	**37**
	FR 5400 L	Side Mount	19,1 mm	250 kg	**38**
	SPECIAL SOLUTIONS				**40**
Reg.-Ext. Door Display Slide	**FR 505-T**	Top Mount	73 mm	80 kg	**42**
Full-Ext. Progr.-Action pull out	**FR 775-A**	Bottom Mount	88,5 mm	75 kg	**43**
Full-Ext. Progr.-Action pull out	**FR 771**	Bottom Mount	108 mm	120 kg	**44**
Sliding absorption system	**FR 771 ECD**				**46**
Full-Ext. Progr.-Action pull out	**FR 777**	Bottom Mount	124 mm	200 kg	**47**
Sliding absorption system	**FR 777 ECD**				**50**
Modular Aluminium system	**FR 9000**	Bottom and Side Mount	56 mm	200 kg	**51**
	STAINLESS STEEL DRAWER SLIDES				**54**
Regular-Extension	**FR 1051 SCC**	Side Mount	15 mm	40 kg	**56**
	FR 1052 SCC	Side Mount	18 mm	50 kg	**57**
	FR 1052 SCC-SC	Side Mount	18 mm	50 kg	**58**
	FR 2051 SCC	Bottom Mount	15 mm	40/50 kg	**59**
	FR 505 SCC	Bottom Mount	15 mm	100 kg	**60**
Full-Ext. Telescopic-Action	**FR 6010 SCC**	Side Mount	15 mm	50 kg	**61**
Full-Ext. Progressive-Action	**FR 785 SCC**	Side Mount	18 mm	60/48 kg	**62**
	FR 785 SCC-SC	Side Mount	18 mm	60/48 kg	**63**
	FR 786 SCC ECD	Bottom Mount	18 mm	60/48 kg	**64**
	FR 790 SCC	Side Mount	18 mm	68/53 kg	**65**
	FR 790 SCC-SC	Side Mount	18 mm	68/53 kg	**66**
	FR 791 SCC	Bottom Mount	18 mm	68/53 kg	**67**
	FR 7100 SCC	Bottom Mount	24 mm	120/105 kg	**68**
	FR 7101 SCC	Side Mount	24 mm	120/105 kg	**69**
	FR 7180 SCC-F	Side & Surface Mount	445 / 525 mm	150 kg	**70**
Locking system	**FR 712 CNS**				**72**
	TERMS AND CONDITIONS OF SALE AND DELIVERY				**73**

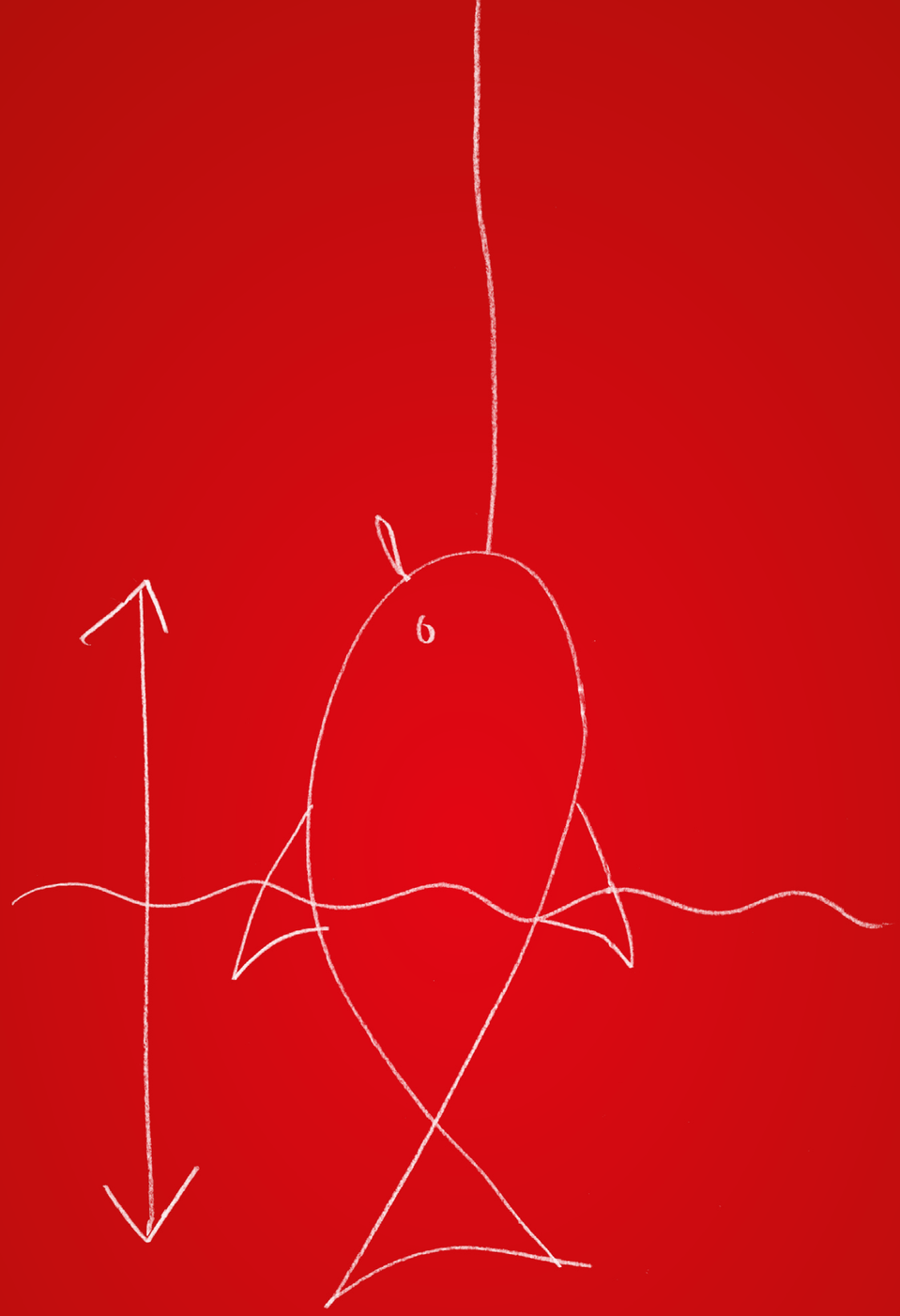

Partially extending drawer slides.

In this case the drawer **cannot be completely extended;** part of it remains in the carcass. Partially extending drawer runners are a **low-cost, economical solution.**

We also offer these simple or partially extending drawer slides as a made-to-measure option, giving you a lead over the competition thanks to high productivity.

Product features:

- Dynamic load capacity range from 30 – 100 kg
- Lengths ranging from 300 – 1,500 mm
- Powder coated or galvanised surface

We can produce partially extending drawer runners with various methods of fitting and attachment, to meet your particular requirements.

TYPE	MODEL	MOUNT	WIDTH	CAPACITY	PAGE
	REGULAR-EXTENSION DRAWER SLIDES				**10**
Regular-Extension	**FR 2021**	Bottom Mount	12 mm	35 kg	**12**
	FR 2022	Bottom Mount	12 mm	30 kg	**13**
	FR 2026	Bottom Mount	12 mm	40 kg	**14**
	FR 2071	Bottom Mount	15 mm	70 kg	**15**
	FR 206	Bottom Mount	16 mm	100 kg	**16**
	FR 206 ECD	Bottom Mount	16 mm	100 kg	**17**
	FR 311	Top Mount	14 mm	30 kg	**18**
	FR 6000-T	Side Mount	15 mm	30 kg	**19**
Mounting Jig	**Fulfix**				**20**
Sliding absorption system	**FR 8001 ECD**	Side Mount	12,5 –15 mm	30 kg	**21**
Sliding absorption system	**FR 8003 ECD**	Side Mount	12,5 –15 mm	70 kg	**22**

FR 2021

SLIDE TYPE:	**Regular-Extension Drawer Slide**
MOUNTING:	Bottom Mount

WIDTH:	**12 mm**
LOAD CAPACITY:	dynamic up to **35 kg**

MATERIAL:	steel, white powder coated
FEATURES:	solid delrin* rollers

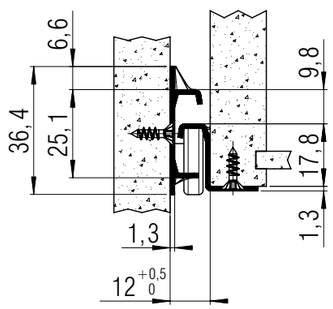

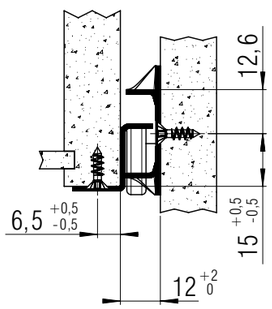

SPECIFICATIONS & NOTES:

- lateral stability provided by specially shaped profiles
- integrated side adjustment - clearance adjustable up to 2 mm
- double hole system on cabinet profile for offset attachment to thin inside walls
- added strength of cabinet profile provided by special front flange
- oblong holes in the cabinet profile permit easy height adjustments
- dual detent in the drawer profile holds the drawer in place when extended
- single-sided captive profile (left)
- self-closing

ⓘ compatible with full-extension drawer slide FR 6500 in the 32 mm system

*DuPont (TM) Delrin®

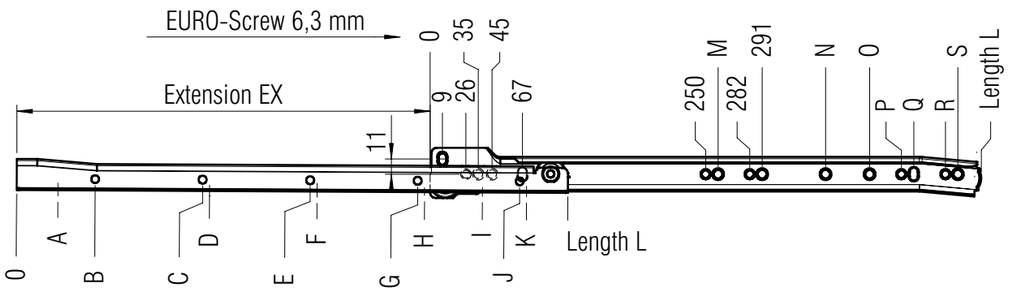

screw holes for 3,5 mm spax screws / 6,3 mm EURO screws

L mm	EX mm	A mm	B mm	C mm	D mm	E mm	F mm	G mm	H mm	I mm	J mm	K mm	M mm	N mm	O mm	P mm	Q mm	R mm	S mm	Weight per pair (kg)	Order No. white
300	215	46	73	137	142					238	265	270					259			0,55	▸ **7065**
350	265	32	91	187	192					288	315	320		323			259			0,63	▸ **7066**
400	300	18	77	173		237	242			338	365	370	259	355		378	387			0,71	▸ **7067**
450	350	36	95	159		287	292			388	415	420	259	387		410	419	442		0,79	▸ **7068**
500	400	22	81	113	118	337	342			438	465	470	259	387	419	442	451	474	483	0,87	▸ **7069**
550	430	40	99	163	168	387	392			488	515	520	259	483		506	515	538		0,96	▸ **7070**
600	480	26	85	213	218	437	442			538	565	570	259			506	515	538	547	1,04	▸ **7071**
650	530	44	71	135		263	268	487	492	588	615	620	259			506	515	538	547	1,13	▸ **7072**
700	560	30	89	185	190	313	318	537	542	638	665	670	259			506	515	538	547	1,21	▸ **7082**

Packing Unit: **20 sets per box** ▸ **prompt delivery**

FR 2022

SLIDE TYPE:	**Regular-Extension Drawer Slide**
MOUNTING:	Bottom Mount

WIDTH:	**12 mm**
LOAD CAPACITY:	dynamic up to **30 kg**

MATERIAL:	steel, white powder coated
FEATURES:	silent rollers

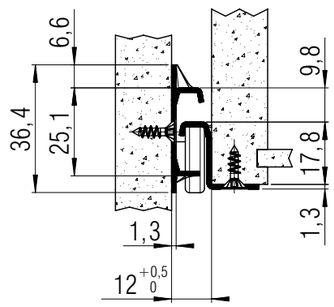

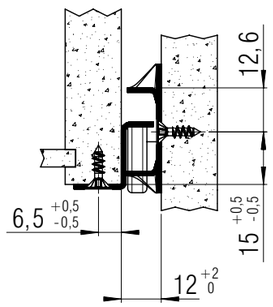

SPECIFICATIONS & NOTES:

- lateral stability provided by specially shaped profiles
- double hole system on cabinet profile for offset attachment to thin inside walls
- added strength of cabinet profile provided by special front flange
- oblong holes in the cabinet profile permit easy height adjustments
- dual detent in the drawer profile holds the drawer in place when extended
- single-sided captive profile (left)
- self-closing

ⓘ compatible with full-extension drawer slide FR 6500 in the 32 mm system

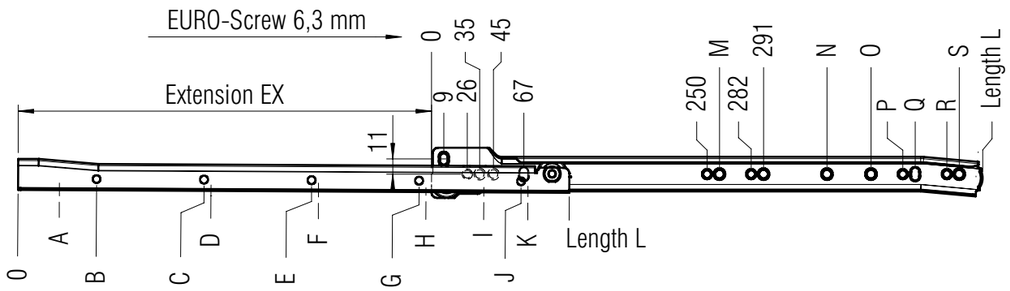

screw holes for 3,5 mm spax screws / 6,3 mm EURO screws

L mm	EX mm	A mm	B mm	C mm	D mm	E mm	F mm	G mm	H mm	I mm	J mm	K mm	M mm	N mm	O mm	P mm	Q mm	R mm	S mm	Weight per pair (kg)	Order No. white
300	215	46	73	137	142					238	265	270					259			0,55	▸ **7085**
350	265	32	91	187	192					288	315	320		323			259			0,63	▸ **7086**
400	300	18	77	173		237	242			338	365	370	259	355		378	387			0,71	▸ **7087**
450	350	36	95	159		287	292			388	415	420	259	387		410	419	442		0,79	▸ **7088**
500	400	22	81	113	118	337	342			438	465	470	259	387	419	442	451	474	483	0,87	▸ **7089**
550	430	40	99	163	168	387	392			488	515	520	259	483		506	515	538		0,96	▸ **7090**
600	480	26	85	213	218	437	442			538	565	570	259			506	515	538	547	1,04	▸ **7091**
650	530	44	71	135		263	268	487	492	588	615	620	259			506	515	538	547	1,13	▸ **7092**
700	560	30	89	185	190	313	318	537	542	638	665	670	259			506	515	538	547	1,21	▸ **7093**

Packing Unit: **20 sets per box** ▸ **prompt delivery**

FR 2026

SLIDE TYPE:	**Regular-Extension Drawer Slide**
MOUNTING:	Bottom Mount

WIDTH:	**12 mm**
LOAD CAPACITY:	dynamic up to **40 kg**

MATERIAL:	steel, white powder coated

FEATURES:	delrin* encased chrome steel ball bearings and solid delrin* rollers

SPECIFICATIONS & NOTES:

- lateral stability provided by specially shaped profiles
- integrated side adjustment - clearance adjustable up to 2 mm
- double hole system on cabinet profile for offset attachment to thin inside walls
- added strength of cabinet profile provided by special front flange
- oblong holes in the cabinet profile permit easy height adjustments
- dual detent in the drawer profile holds the drawer in place when extended
- single-sided captive profile (left)
- self-closing

ⓘ compatible with full-extension drawer slide FR 6500 in the 32 mm system

*DuPont (TM) Delrin®

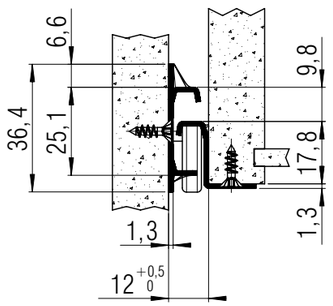

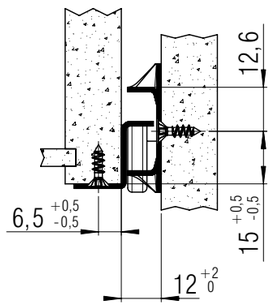

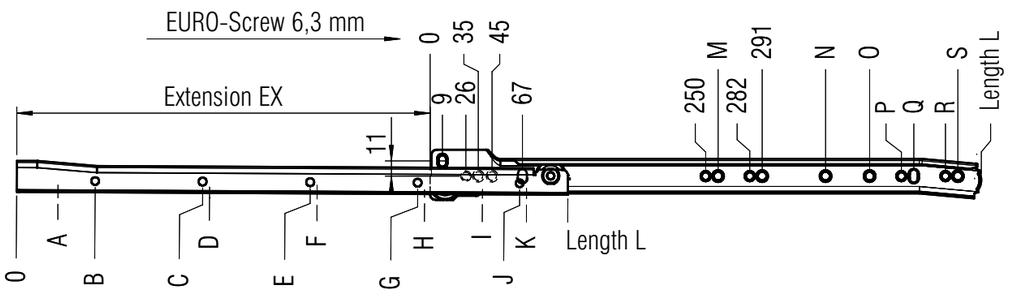

screw holes for 3,5 mm spax screws / 6,3 mm EURO screws

L mm	EX mm	A mm	B mm	C mm	D mm	E mm	F mm	G mm	H mm	I mm	J mm	K mm	M mm	N mm	O mm	P mm	Q mm	R mm	S mm	Weight per pair (kg)	Order No. white
300	215	46	73	137	142					238	265	270					259			0,55	▸ **2101**
350	265	32	91	187	192					288	315	320		323			259			0,63	▸ **2102**
400	300	18	77	173		237	242			338	365	370	259	355		378	387			0,71	▸ **2103**
450	350	36	95	159		287	292			388	415	420	259	387		410	419	442		0,79	▸ **2104**
500	400	22	81	113	118	337	342			438	465	470	259	387	419	442	451	474	483	0,87	▸ **2105**
550	430	40	99	163	168	387	392			488	515	520	259	483		506	515	538		0,96	▸ **2106**
600	480	26	85	213	218	437	442			538	565	570	259			506	515	538	547	1,04	▸ **2107**
650	530	44	71	135		263	268	487	492	588	615	620	259			506	515	538	547	1,13	▸ **2108**
700	560	30	89	185	190	313	318	537	542	638	665	670	259			506	515	538	547	1,21	▸ **2109**

Packing Unit: **20 sets per box** ▸ **prompt delivery**

FR 2071

SLIDE TYPE:	**Regular-Extension Drawer Slide**
MOUNTING:	Bottom Mount

WIDTH:	**15 mm**
LOAD CAPACITY:	dynamic up to **70 kg**

MATERIAL:	steel, white powder coated

FEATURES:	silent rollers

SPECIFICATIONS:

- lateral stability provided by specially shaped profiles (- length 1000 mm)
- cabinet profile with rubber stop
- dual detent in the drawer profile holds the drawer in place when extended
- the edge of a thick drawer bottom is covered by the tall drawer profile
- quiet running provided by precision silent rollers
- single-sided captive profile (right)
- self-closing

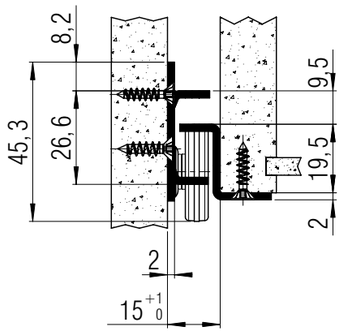

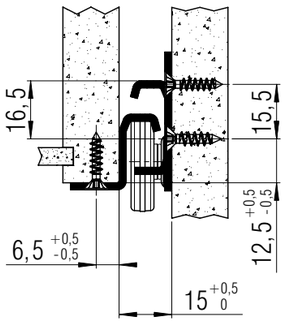

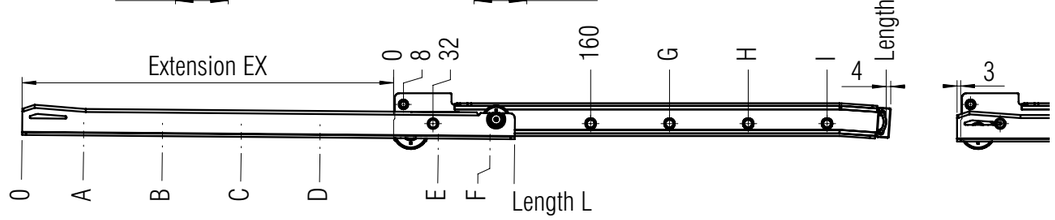

screw holes for 3,5 mm spax screws

L mm	EX mm	A mm	B mm	C mm	D mm	E mm	F mm	G mm	H mm	I mm	Weight per pair (kg)	Order No. white
300	212	46	142	238	270			256			0,90	▸ **1349**
350	262	32	192	288	320			288			1,04	▸ **1350**
400	302	18	242	338	370			288			1,18	▸ **1351**
450	352	36	292	388	420			288			1,32	▸ **1352**
500	402	22	182	342	438	470		288	448		1,46	▸ **1353**
550	432	40	168	392	488	520		288	480		1,60	▸ **1354**
600	482	26	218	442	538	570		288	544		1,74	▸ **1355**
650	532	44	268	492	588	620		288	544		1,88	▸ **1356**
700	582	30	190	318	542	638	670	288	544		2,02	▸ **1357**
750	612	16	176	368	592	688	720	288	544		2,17	▸ **1358**
800	662	34	226	418	642	738	770	288	544	736	2,33	▸ **1359**
850	712	20	276	468	692	788	820	288	544	768	2,47	▸ **1360**
900	742	38	230	518	742	838	870	288	544	768	2,61	▸ **1361**
950	792	24	280	568	792	888	920	288	544	768	2,76	▸ **1362**
1000	842	42	330	618	842	938	970	288	544	768	2,89	▸ **1363**

Packing Unit: **10 sets per box** ▸ **prompt delivery**

FR 206

SLIDE TYPE:	**Regular-Extension Drawer Slide**
MOUNTING:	Bottom Mount

WIDTH:	**16 mm**
LOAD CAPACITY:	dynamic up to **100 kg**

MATERIAL:	steel, galvanized or white powder coated

FEATURES:	steel ball bearings or solid delrin* rollers

SPECIFICATIONS:

- stay-closed feature holds the drawer in place when closed
- dual detent in the drawer profile holds the drawer in place when extended
- with holes for 4,5 mm screws
- steel rear backstop

galvanized - steel ball bearings
white powder coated - solid delrin* rollers

*DuPont (TM) Delrin®

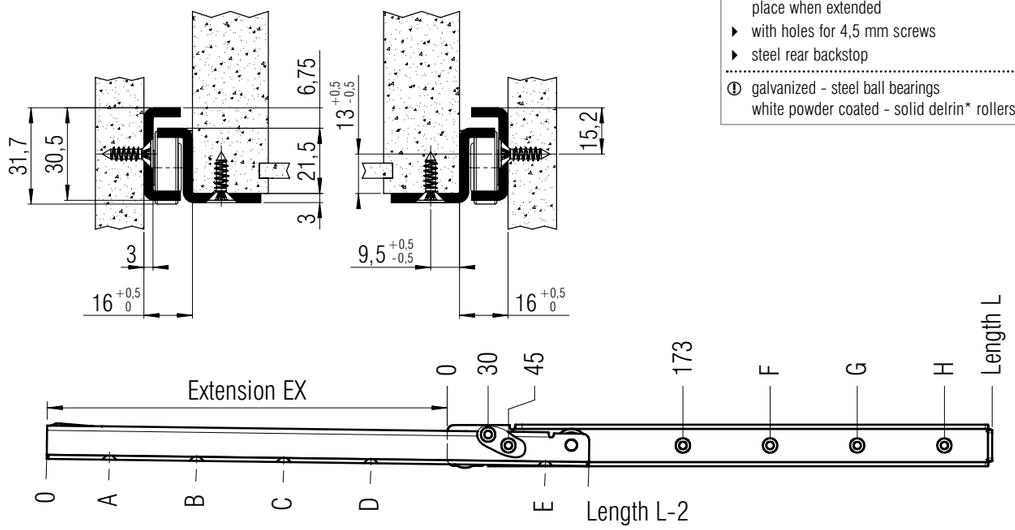

screw holes for 4,5 mm spax screws

L mm	EX mm	A mm	B mm	C mm	D mm	E mm	F mm	G mm	H mm	Weight per pair (kg)	Order No. galvanized	Order No. white
300	209	42	138	266			269			1,48	▸ **4064**	*
350	259	60	188	316			301			1,71	▸ **4065**	▸ **4079**
400	294	46	238	366			333			1,94	▸ **4066**	▸ **4080**
450	344	96	288	416			365			2,17	▸ **4067**	▸ **4081**
500	394	50	146	338	466		365	461		2,40	▸ **4068**	▸ **4082**
550	444	68	196	388	516		365	493		2,63	▸ **4069**	▸ **4083**
600	494	54	246	438	566		365	557		2,86	▸ **4070**	▸ **4084**
650	544	40	296	488	616		365	621		3,09	▸ **4071**	▸ **4085**
700	564	58	186	346	538	666	365	525	653	3,33	▸ **4072**	▸ **4086**
750	614	76	204	396	588	716	365	557	685	3,55	▸ **4073**	*
800	654	62	190	446	638	766	365	621	749	3,79	▸ **4074**	▸ **4087**
850	704	80	240	496	688	816	365	621	781	4,04	▸ **4075**	*
900	744	66	290	546	738	866	365	621	845	4,27	▸ **4076**	▸ **4088**
950	794	52	340	596	788	916	365	621	909	4,51	▸ **4077**	*
1000	834	70	390	646	838	966	365	621	941	4,74	▸ **4078**	▸ **4089**

Packing Unit: **300-550 mm 10 sets per box; 600-1000 mm: 7 sets per box** ▸ **prompt delivery** * **on request**

FR 206 ECD

SLIDE TYPE:	**Regular-Extension Drawer Slide**
MOUNTING:	Bottom Mount

WIDTH:	**16 mm**
LOAD CAPACITY:	dynamic up to **100 kg**

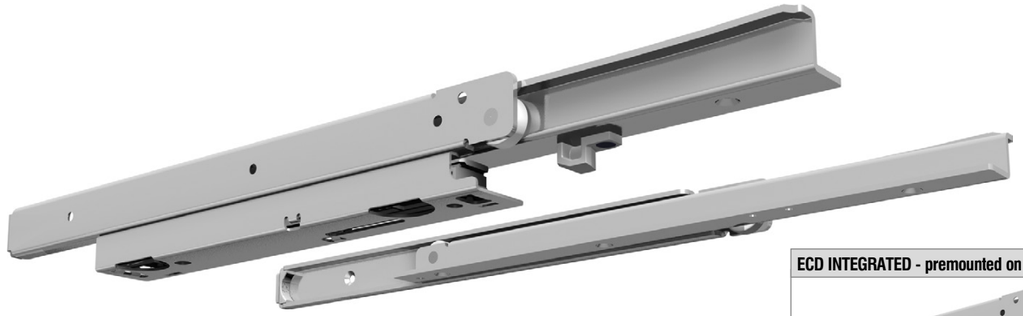

ECD INTEGRATED - premounted on one side (left)

MATERIAL:	steel, galvanized

FEATURES:	steel ball bearings (galvanized) or solid delrin* rollers (coated)

SPECIFICATIONS:

- cabinet and drawer profile with screw holes
- stay-closed feature holds the drawer in place when closed
- dual detent in the drawer profile holds the drawer in place when extended
- soft rubber back stop
- **Easy Close Device (ECD)** integrated

galvanized - steel ball bearings

*DuPont (TM) Delrin®

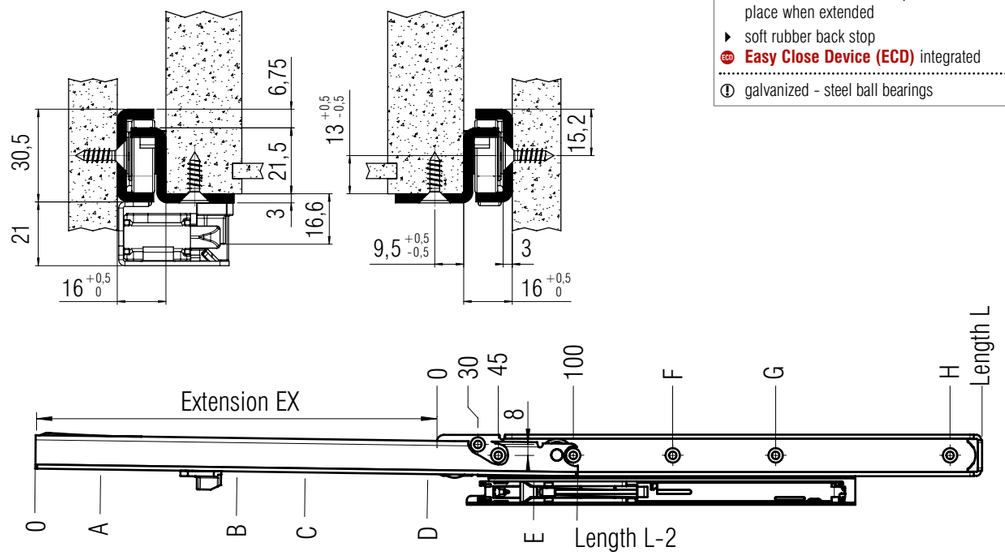

screw holes for 4,5 mm spax screws

L mm	EX mm	A mm	B mm	C mm	D mm	E mm	F mm	G mm	H mm	Weight per pair (kg)	Order No. galvanized
400	294	46	238	366			333			2,30	▸ **4303**
450	344	96	288	416			365			2,53	▸ **4304**
500	394	50	146	338	466		365	461		2,76	▸ **4305**
550	444	68	196	388	516		365	493		2,99	▸ **4306**
600	494	54	246	438	566		365	557		3,23	▸ **4307**
650	544	40	296	488	616		365	621		3,47	▸ **4308**
700	564	58	186	346	538	666	365	525	653	3,72	▸ **4309**
750	614	76	204	394	588	716	365	557	685	3,97	*
800	654	62	190	446	638	766	365	621	749	4,22	▸ **4311**
850	704	80	240	496	688	816	365	621	781	4,46	*
900	744	66	290	546	738	866	365	621	845	4,71	▸ **4313**
950	794	52	340	596	788	916	365	621	909	4,94	*
1000	834	70	390	646	838	966	365	621	941	5,16	▸ **4315**

Packing Unit: **2 sets per box** ▸ **prompt delivery** * **on request**

FR 311

SLIDE TYPE:	**Regular-Extension Drawer Slide for shelves and drawers**
MOUNTING:	Top Mount

WIDTH:	**14 mm**
LOAD CAPACITY:	dynamic up to **30 kg**

MATERIAL:	steel, white powder coated

FEATURES:	delrin* encased steel ball bearings and solid delrin* rollers

SPECIFICATIONS & NOTES:

- Attaches to the underside of a work surface
- the overrun clip in the cabinet profile prevents the drawer or shelf from accidentally disengaging
- stop in the cabinet profile

ⓘ the ideal drawer runner for adding drawers or shelves to an existing work surface

*DuPont (TM) Delrin®

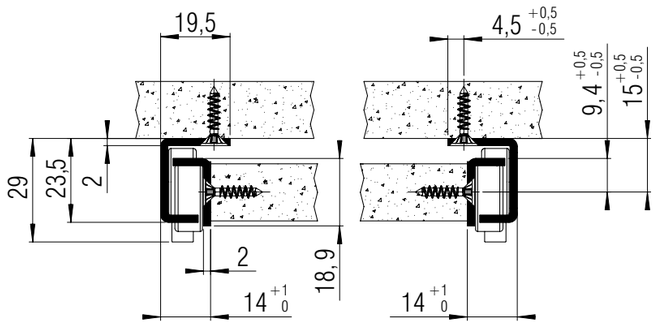

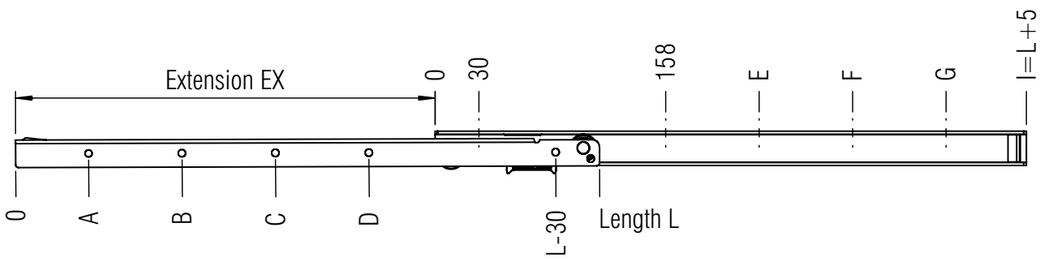

screw holes for 3,5 mm spax screws

L mm	EX mm	A mm	B mm	C mm	D mm	I mm	E mm	F mm	G mm	Weight per pair (kg)	Order No. white
300	192	46	142			305	254			0,76	▸ **3093**
350	242	32	192			355	286			0,87	▸ **3094**
400	287	50	242			405	350			0,97	▸ **3095**
450	337	36	292			455	350			1,10	▸ **3096**
500	387	22	150	342		505	350	446		1,22	▸ **3097**
550	437	40	200	392		555	350	478		1,34	▸ **3098**
600	487	26	250	442		605	350	542		1,45	▸ **3099**
650	537	76	300	492		655	350	542		*	*
700	577	30	158	350	542	705	350	542	670	*	*
750	627	16	176	400	592	755	350	542	702	*	*

Packing Unit: **20 sets per box** ▸ **prompt delivery** * **on request**

Fulterer

FR 6000-T

SLIDE TYPE:	**Regular-Extension Drawer Slide for pull-out shelves and keyboards**
MOUNTING:	Side Mount

WIDTH:	**15 mm**
LOAD CAPACITY:	dynamic up to **30 kg**

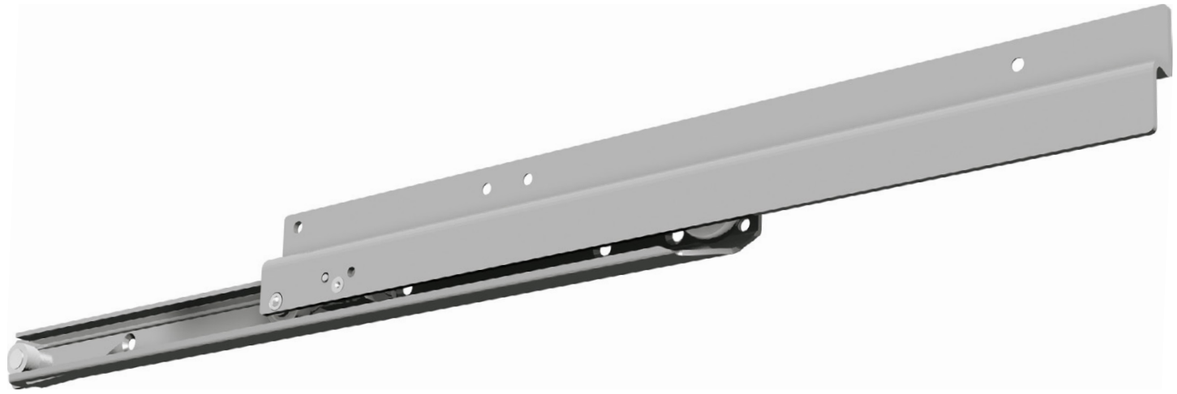

MATERIAL:	steel, grey powder coated

FEATURES:	solid delrin* rollers

SPECIFICATIONS:

- laterally stable Regular-Extension Drawer slide
- locked in extended position by overrun clip
- assembly to the side panel for screwing in the row of holes 32 mm
- assembly to the shelf for screwing, side mount

ⓘ observe the following sequence, as the shelf is not demountable once it is has been installed:

1. screw on the cabinet profile to the side
2. mount the shelf profile and pull out as far as the locking position
3. insert the shelf and screw on

ⓘ other lengths available on request

*DuPont (TM) Delrin®

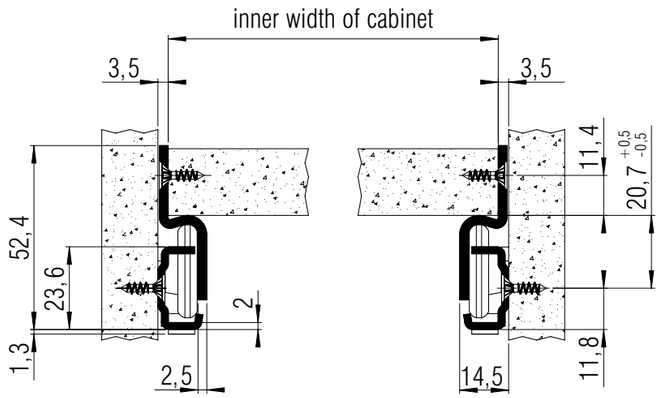

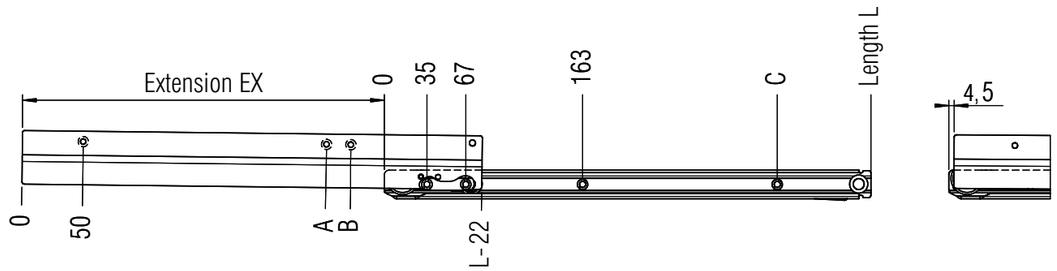

screw holes for 3,5 mm spax screws

L mm	EX mm	A mm	B mm	C mm	Weight per pair (kg)	Order No. light grey
350	247,5	200	220	291	1,21	▸ **7271**
400	297,5	250	270	323	1,38	▸ **7272**

Packing Unit: **10 sets per box** ▸ **prompt delivery, other lengths on request**

Fulterer

FULFIX II

MOUNTING JIG:	suited for drawer slides FR 2021, FR 2022, FR 2026 and FR 6500

MATERIAL:	grey plastic, steel

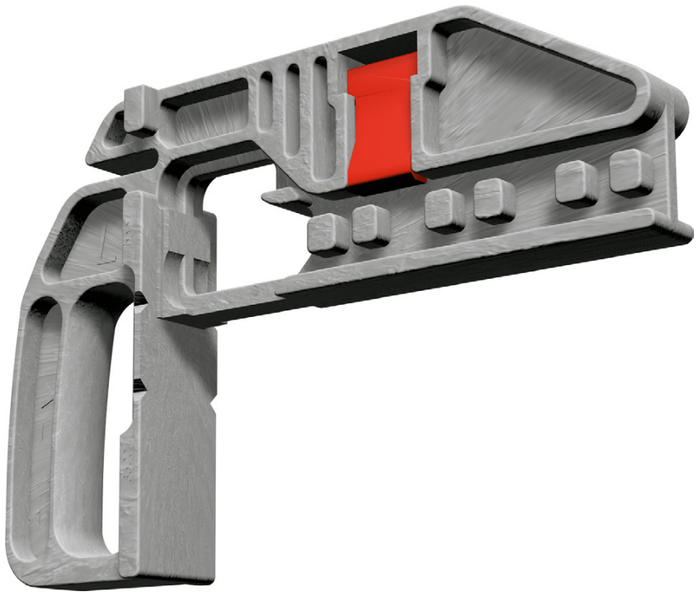

SPECIFICATIONS:

- suited for the cabinet profiles of FR 2021, FR 2022, FR 2026 and FR 6500
- clamping device assures a perpendicular and square fit onto the cabinet side
- for overlay or insert drawer fronts (19 mm setback)

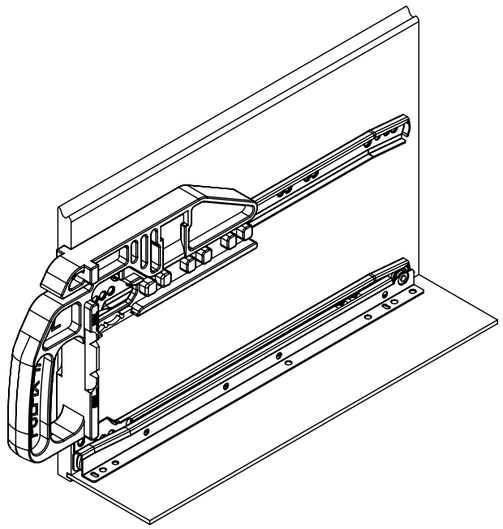

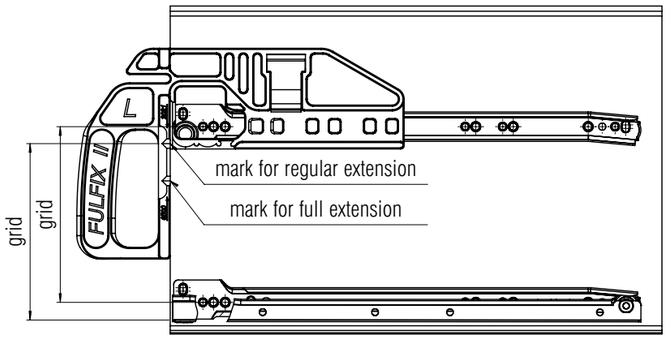

FULFIX II Colour	Weight	Order No.
grey	0,34	▸ 3000
Packing Unit: **1 piece**		▸ prompt delivery

Fulterer

FR 8001 ECD

PRODUCT TYPE:	Easy Close Device for Regular-Extension Drawer Slides
MOUNTING:	Side Mount

WIDTH:	min. 12.5 mm

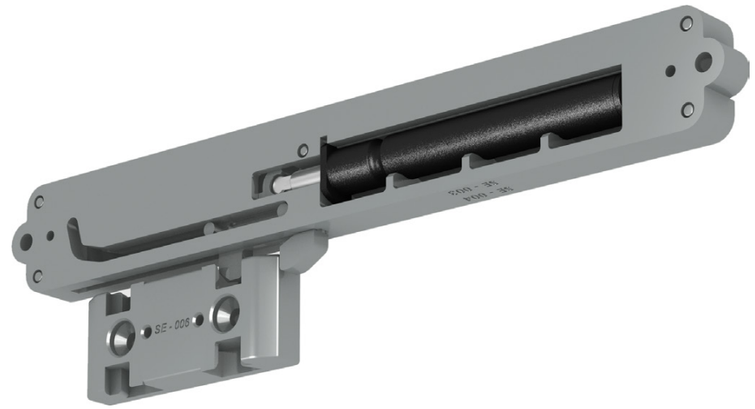

ECD

MATERIAL:	grey plastic, steel

SPECIFICATIONS:

- can be used in combination with any drawer slide with a minimum of 12.5 mm side clearance
- drawer is softly pulled shut from approx. 30 mm
- load capacity up to 30 kg
- temperature range from 10° up to 40° C

ⓘ delivery set:
– 2 pieces spring and dampening cylinder
– 2 pieces follower
– 1 piece mounting instructions
– 1 piece mounting set

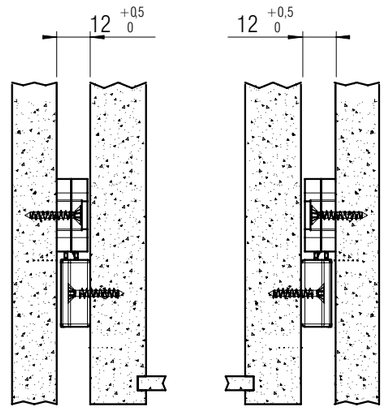

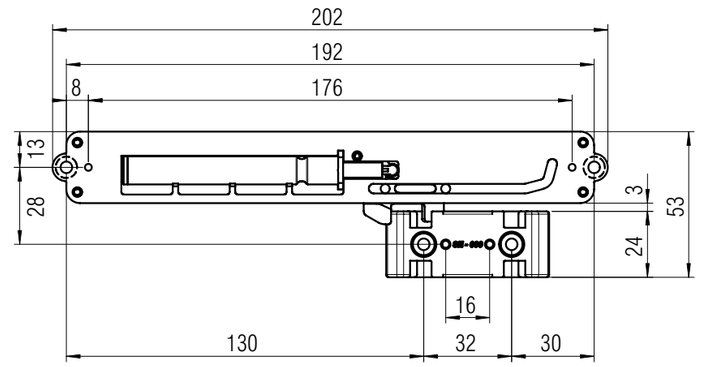

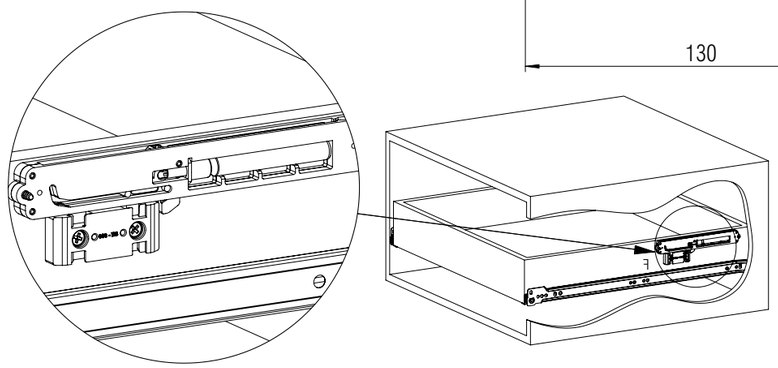

Mounting Diagram

Description	Order No. grey
FR 8001.ECD	▸ 8001
Packing Unit: **1 set per box**	▸ prompt delivery

Fulterer

FR 8003 ECD

PRODUCT TYPE:	**Easy Close Device for Regular-Extension Drawer Slides**
MOUNTING:	Side Mount

WIDTH:	**min. 12.5 mm**

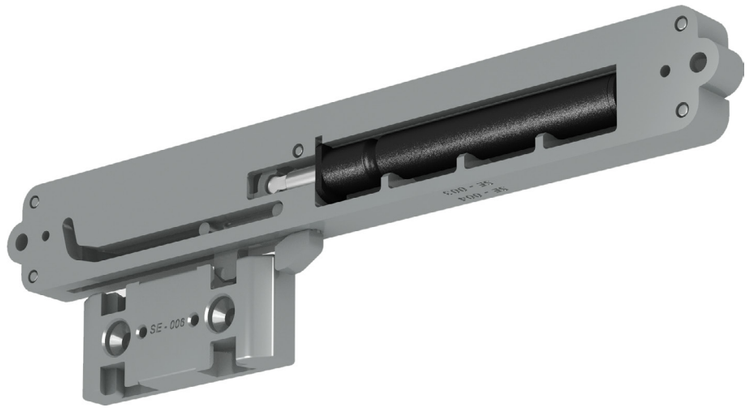

ECD

MATERIAL:	grey plastic, steel

SPECIFICATIONS:

- can be used in combination with any drawer slide with a minimum of 12.5 mm side clearance
- drawer is softly pulled shut from approx. 30 mm
- load capacity up to 70 kg
- temperature range from 5° up to 40° C

ⓘ delivery set:
– 2 pieces spring and dampening cylinder
– 2 pieces follower
– 1 piece mounting instructions
– 1 piece mounting set

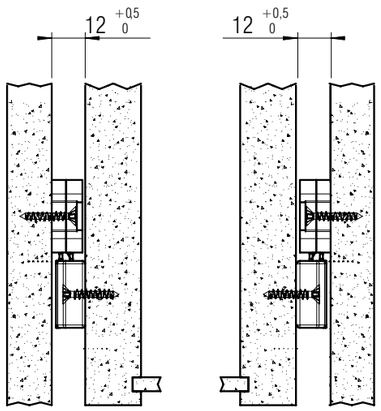

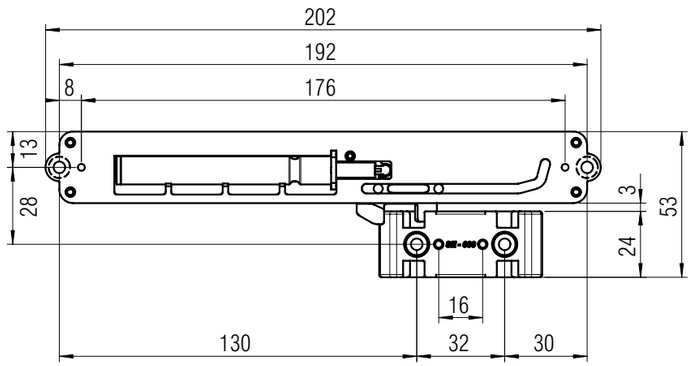

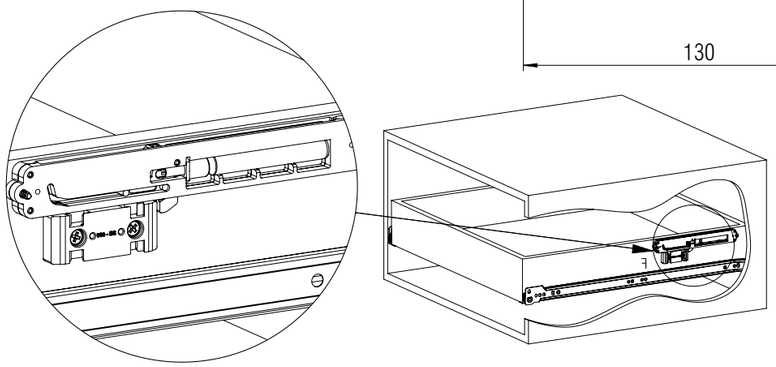

Mounting Diagram

Description	Order No. grey
FR 8003.ECD cold-resistant	▸ **8003**
Packing Unit: **1 set per box**	▸ **prompt delivery**

Fulterer

Notes.

Fulterer

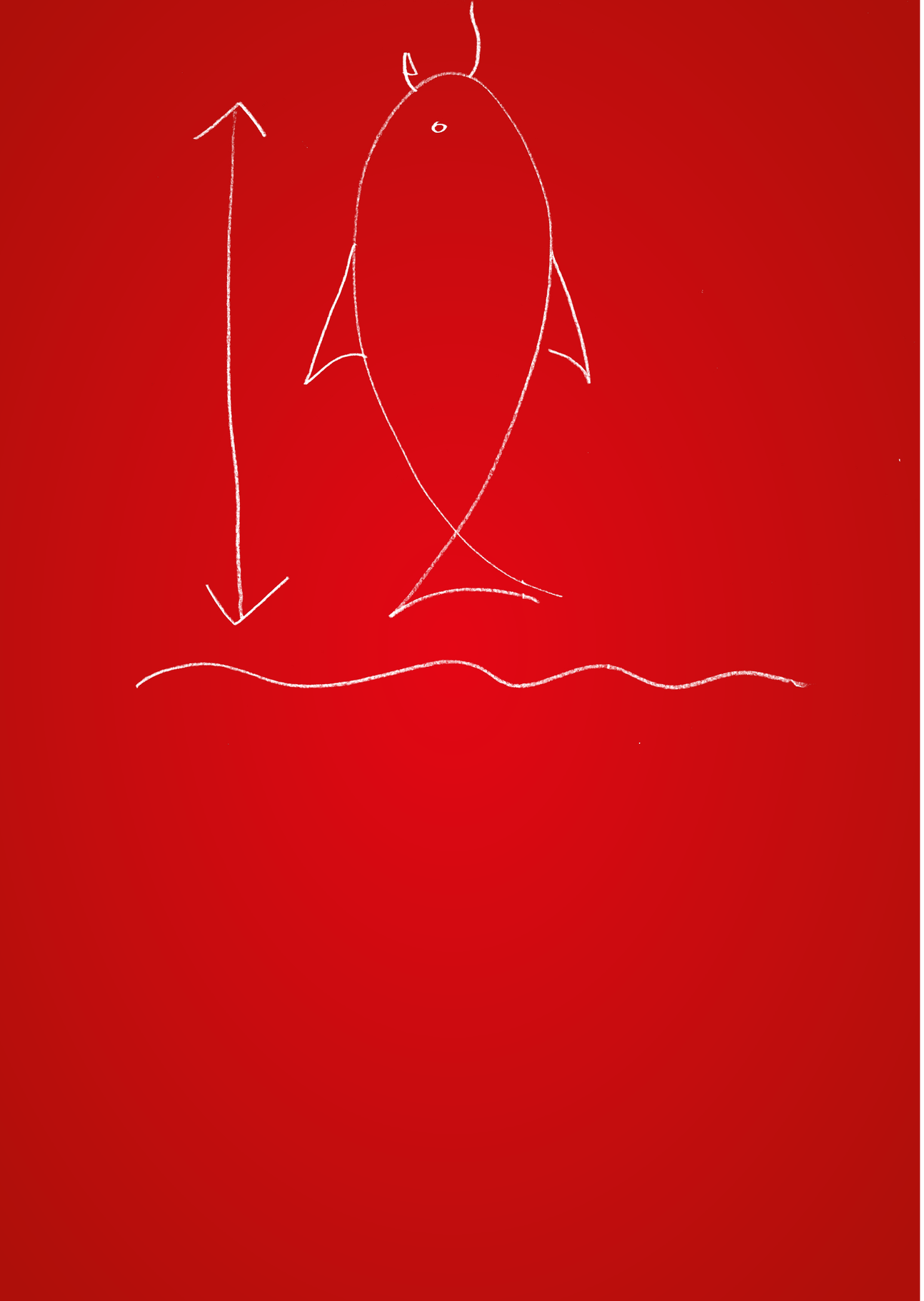

Fully extendible and differential drawer slides.

With this type of drawer slide the drawer **can be fully extended,** with **over-extension** even beyond the front edge of the carcass.

Differential drawer slides are the easiest running among the fully extendible drawer runners. When the drawer is opened these slides provide a supporting function, so that the maximum load capacity remains the same over the full length of the drawer extension.

Product features:

- High dynamic load capacity range from 30 – 200 kg
- Lengths ranging from 200 – 1,000 mm
- Powder coated or galvanised surface

To meet your needs we can produce drawer systems with various types of fitting and attachment, which are precisely tailored to suit your requirements.

TYPE	MODEL	MOUNT	WIDTH	CAPACITY	PAGE
	FULL-EXTENSION DRAWER SLIDES				**24**
Telescopic-Action	**FR 6500**	Bottom Mount	12 mm	50 kg	**26**
	FR 6010	Side Mount	15 mm	50 kg	**27**
Progressive-Action	**FR 786 ECD**	Bottom Mount	18 mm	55 kg/40 kg	**28**
	FR 791	Bottom Mount	18 mm	60 kg/45 kg	**29**
	FR 7180	Bottom Mount	24 mm	200 kg	**30**
Telescopic-Action	**FR 5000**	Side Mount	12,7 mm	45 kg	**31**
Side Mount Bracket f. FR 5000	**FR 5000 ASW**	Side Mount	14 mm		**32**
Telescopic-Action	**FR 5001 ECD**	Side Mount	12,7 mm	40 kg	**33**
	FR 5002 CNS	Side Mount	12,7 mm	45 kg	**34**
	FR 5036	Side Mount	12,7 mm	30 kg	**35**
	FR 5052	Side Mount	12,9 mm	90 kg	**36**
	FR 5400	Side Mount	19,1 mm	250 kg	**37**
	FR 5400 L	Side Mount	19,1 mm	250 kg	**38**

FR 6500

SLIDE TYPE:	**Full-Extension Drawer Slide - Telescopic-Action**
MOUNTING:	Bottom Mount

WIDTH:	**12 mm**
LOAD CAPACITY:	dynamic up to **50 kg**

MATERIAL:	steel or white powder coated
FEATURES:	solid delrin* rollers, silent rollers

SPECIFICATIONS & NOTES:

- lateral stability provided by specially shaped profiles
- with impact-absorbing stop and overrun safety clip already mounted in middle profile
- easy mounting and removal of middle profile
- special reinforcement of middle profile
- special geometry of backstops and self-closing features ensures quiet operation and precise guidance of middle profile
- with over-extension (standard)
- double-sided captive profile
- self-closing

ⓘ compatible with regular-extension drawer slides FR 2021, FR 2022 and the FR 2026 in the 32 mm system

*DuPont (TM) Delrin®

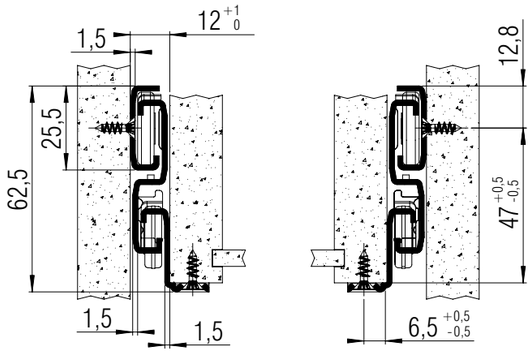

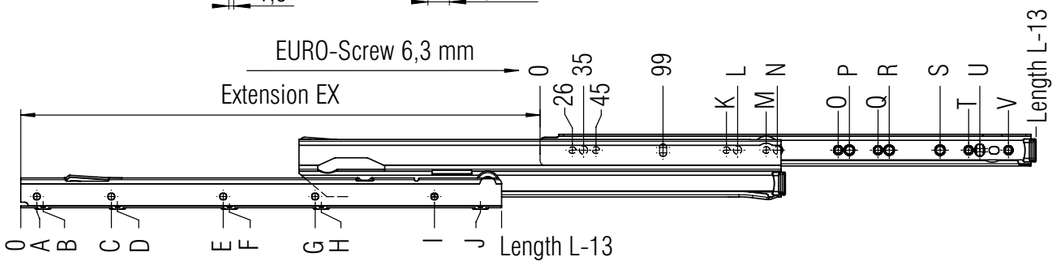

screw holes for 3,5 mm spax screws

L mm	EX mm	A mm	B mm	C mm	D mm	E mm	F mm	G mm	H mm	I mm	J mm	K mm	L mm	M mm	N mm	O mm	P mm	Q mm	R mm	S mm	T mm	U mm	V mm	Weight per pair kg	Order No. white
200	200		42								170	122	131	154	163									0,79	▸ **1200**
250	250		28								220	186	195	218	227									0,97	▸ **1201**
300	320		46		142						270	250		282			227					259		1,18	▸ **1202**
350	370	27	32	187	192					283	320	250		282	291		227					259		1,36	▸ **1203**
400	420	13	18	237	242					333	370	250		282	291		227					259		1,54	▸ **1204**
450	470	31	36	287	292					383	420	250	259	282	291		387	410				419		1,73	▸ **1205**
500	550	17	22	113	118	337	342			433	470	250	259	282	291	442	419	474	483			451		1,94	▸ **1206**
550	570	35	40	163	168	387	392			483	520	250	259	282	291	506	483	538				515		2,11	▸ **1207**
600	620	21	26	213	218	437	442			533	570	250	259	282	291	506	483	538	547			515		2,29	▸ **1208**
650	670	39	44	263	268	487	492			583	620	250	259	282	291	506	483	538	547			515		2,48	▸ **1260**
700	750	25	30	185	190	313	318	537	542	633	670	250	259	282	291	506	483	538	547			515		2,67	▸ **1261**
750	770	43	48	235	240	363	368	587	592	683	720	250	259	282	291	506	515	538	547	675	698	707	730	2,85	▸ **1262**
800	820	29	34	221	226	413	418	637	642	733	770	250	259	282	291	506	515	538	547	739	762	771		3,05	▸ **1263**

Packing Unit: **10 sets per box** ▸ **prompt delivery**

FR 6010

SLIDE TYPE:	**Full-Extension Drawer Slide - Telescopic-Action**
MOUNTING:	Side Mount

WIDTH:	**15 mm**
LOAD CAPACITY:	dynamic up to **50 kg**

MATERIAL:	steel, galvanized
FEATURES:	delrin* encased steel ball bearings

SPECIFICATIONS:

- excellent lateral stability provided by specially shaped profiles
- with over-extension of at least 30 mm (standard)
- holdout catch on middle profile for easy drawer insertion
- double holes at front of cabinet profile reinforce against heaviest loads
- double-sided captive profile
- soft stop

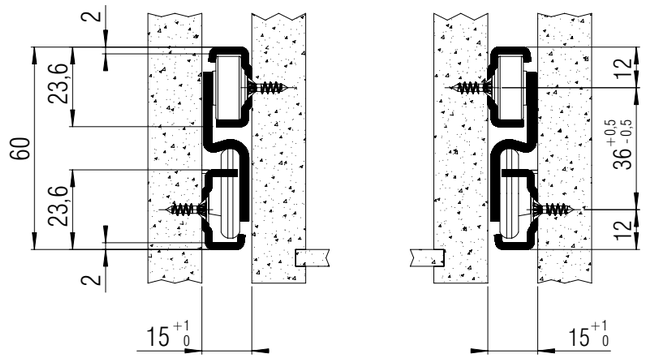

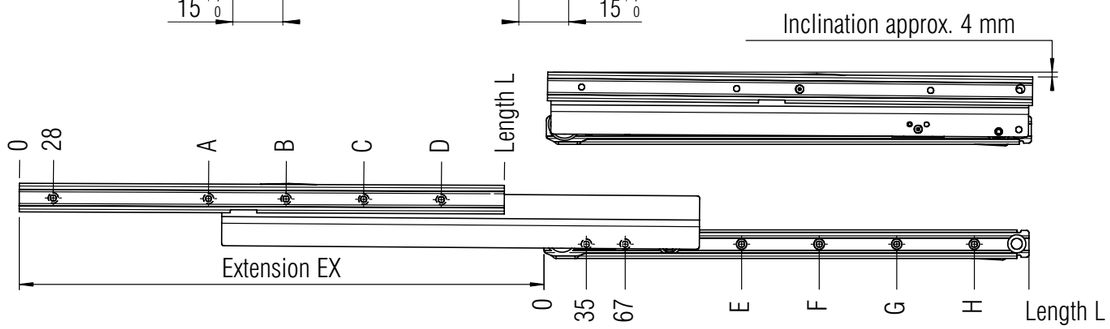

screw holes for 3,5 mm spax screws

L mm	EX mm	A mm	B mm	C mm	D mm	E mm	F mm	G mm	H mm	Weight per pair (kg)	Order No. galvanized
300	300	124	252			131	259			1,51	▸ **2500**
350	380	156	284			163	291			1,74	▸ **2501**
400	430	156	316			163	323			1,97	▸ **2502**
450	480	188	380			195	387			2,20	▸ **2503**
500	530	156	284	412		163	291	419		2,43	▸ **2504**
550	580	156	316	476		163	323	483		2,67	▸ **2505**
600	630	188	348	540		195	355	515		2,90	▸ **2506**
650	680	188	380	572		195	387	579		*	*
700	730	124	252	476	636	163	323	483	643	*	*
750	780	156	284	508	700	195	355	515	675	*	*
800	830	188	316	540	732	195	355	547	739	*	*

Packing Unit: **6 sets per box** ▸ **prompt delivery** * **on request**

FR 786 ECD

SLIDE TYPE:	**Full-Extension Drawer Slide - Progressive-Action**
MOUNTING:	Bottom Mount

WIDTH:	**18 mm**
LOAD CAPACITY:	dynamic up to **55 kg** (full-ext.) dynamic up to **40 kg** (over-ext.)

ECD

MATERIAL:	steel, white powder coated
FEATURES:	solid delrin* rollers

SPECIFICATIONS & NOTES:

- cabinet and drawer profile with screw holes
- high lateral stability through specially formed middle profile and guide rollers
- ideal running characteristic and smoothness of running through integrated progressive-action
- safety clip mounted in middle profile
- double-sided captive profile
- self-closing
- soft stop
- **Easy Close Device (ECD)** integrated

ⓘ on request compatible regular-extension drawer slide is available

ⓘ on request available with 60 mm over-extension

*DuPont (TM) Delrin®

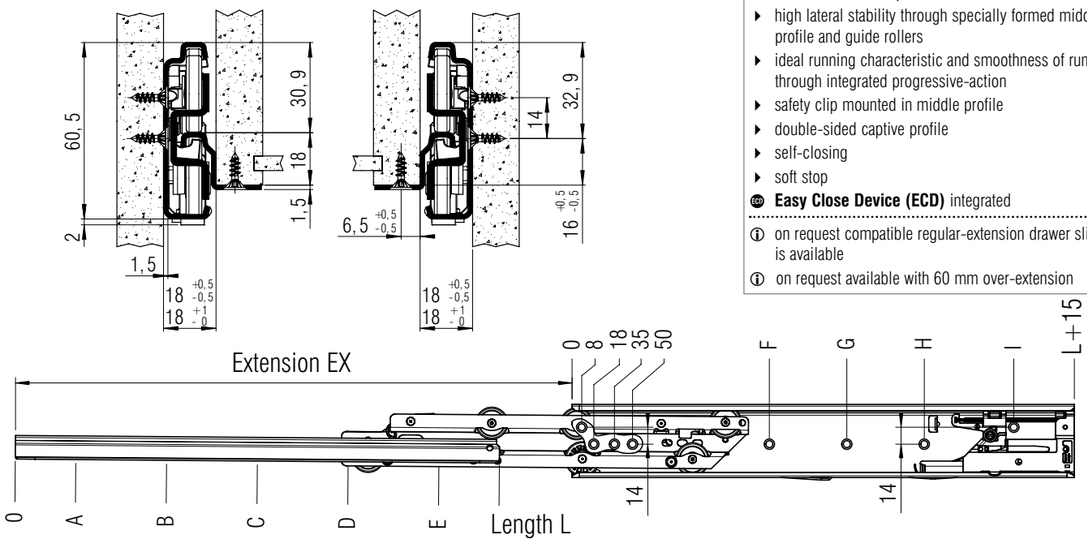

screw holes for 3,5 mm spax screws

L mm	EX full-ext.	EX over-ext.	A mm	B mm	C mm	D mm	E mm	F mm	G mm	H mm	I mm	Weight per pair (kg)	Order No. full-ext. white
335	320	395	28	156	316			163			315	1,68	*
350	335	410	28	156	316			163			315	1,76	▸ **8201**
385	370	445	28	156	348			163			365	1,94	*
400	385	460	28	156	380			163			365	2,02	▸ **8202**
435	420	495	28	156	316	412		163	355		415	2,19	*
450	435	510	28	156	316	412		163	355		415	2,27	▸ **8203**
485	470	545	28	156	348	444		163	355		465	2,45	*
500	485	560	28	156	348	476		163	355		465	2,53	▸ **8204**
535	520	595	28	156	348	508		163	355		515	2,70	*
550	535	610	28	156	348	508		163	355		515	2,78	▸ **8205**
585	570	645	28	156	348	540		195	355		565	2,96	*
600	585	660	28	156	348	572		195	355		565	3,04	▸ **8206**
635	620	695	28	156	348	604		163	355	547	615	3,21	*
650	635	710	28	156	348	604		163	355	547	615	3,29	*
685	670	745	28	156	348	540	668	163	355	547	665	3,47	*
700	685	760	28	156	348	540	668	163	355	547	665	3,55	*
735	720	795	28	156	348	572	700	163	355	547	715	3,72	*
750	735	810	28	156	348	572	732	163	355	547	715	3,80	*

Packing Unit: **5 sets per box** ▸ **prompt delivery** * **minimum order quantity and lead time on request!**

Fulterer

FR 791

SLIDE TYPE:	**Full-Extension Drawer Slide - Progressive-Action**
MOUNTING:	Bottom Mount

WIDTH:	**18 mm**
LOAD CAPACITY:	dynamic up to **60 kg** (full-ext.) dynamic up to **45 kg** (over-ext.)

MATERIAL:	steel, galvanized
FEATURES:	solid delrin* rollers

SPECIFICATIONS & NOTES:

- cabinet and drawer profile with screw holes
- high lateral stability through specially formed middle profile and guide rollers
- ideal running characteristic and smoothness of running through integrated progressive-action
- safety clip mounted in middle profile
- double-sided captive profile
- self-closing
- soft stop

ⓘ on request compatible regular-extension drawer slide is available

ⓘ on request available with 60 mm over-extension

*DuPont (TM) Delrin®

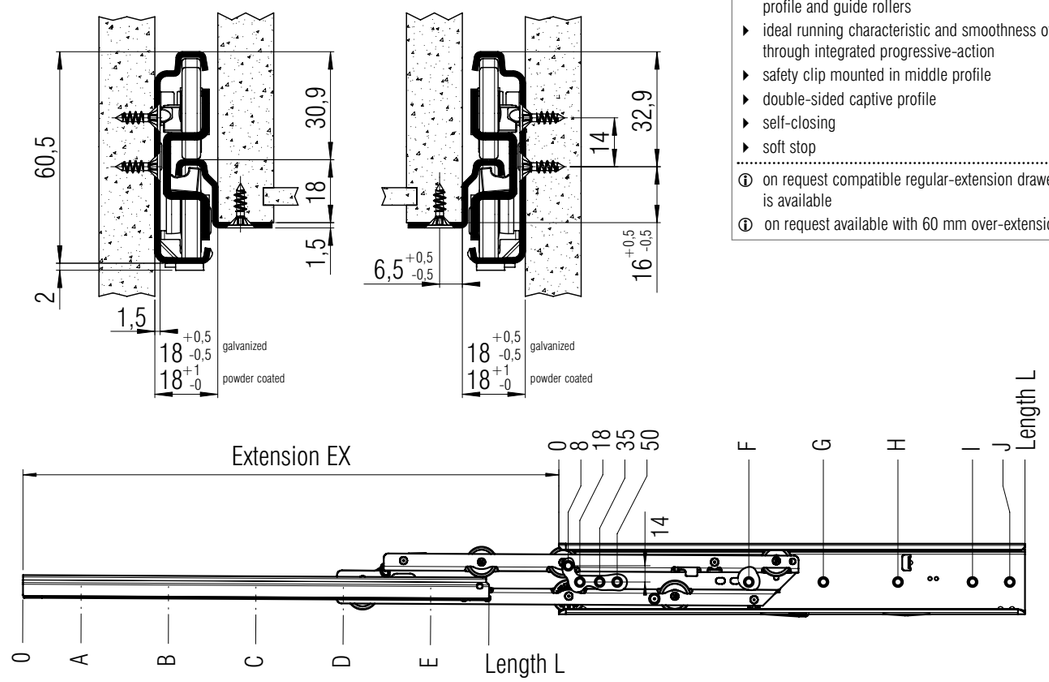

screw holes for 3,5 mm spax screws

L mm	EX full-ext.	EX over-ext.	A mm	B mm	C mm	D mm	E mm	F mm	G mm	H mm	I mm	J mm	Weight per pair (kg)	Order No. full-ext. galvanized
350	335	410	28	156	316			163	291	323			1,73	▸ **7800**
400	385	460	28	156	380			163	355	387			1,99	▸ **7801**
450	435	510	28	156	316	412		163	355	387			2,24	▸ **7802**
500	485	560	28	156	348	476		163	355	451	483		2,50	▸ **7803**
550	535	610	28	156	348	508		163	355	483	515		2,75	▸ **7804**
600	585	660	28	156	348	572		195	355	547	579		3,00	▸ **7805**
650	635	710	28	156	348	604		163	355	515	547		3,26	▸ **7806**
700	685	760	28	156	348	540	668	163	355	547	643	675	3,52	▸ **7807**
750	735	810	28	156	348	572	732	163	355	547	611	643	3,77	▸ **7808**

Packing Unit: **5 sets per box** ▸ **prompt delivery**

Fulterer

FR 7180

SLIDE TYPE:	**Full-Extension Drawer Slide - Progressive-Action**
MOUNTING:	Bottom Mount

WIDTH:	**24 mm**
LOAD CAPACITY:	dynamic up to **200 kg** (full-ext.)

MATERIAL:	steel, galvanized or lightgrey powdercoated

FEATURES:	solid delrin* rollers

SPECIFICATIONS & NOTES:

- cabinet and drawer profile with screw holes
- high lateral stability through specially formed middle profile and guide rollers
- ideal running characteristic and smoothness of running
- safety clip mounted in middle profile
- double-sided captive profile
- self-closing

*DuPont (TM) Delrin®

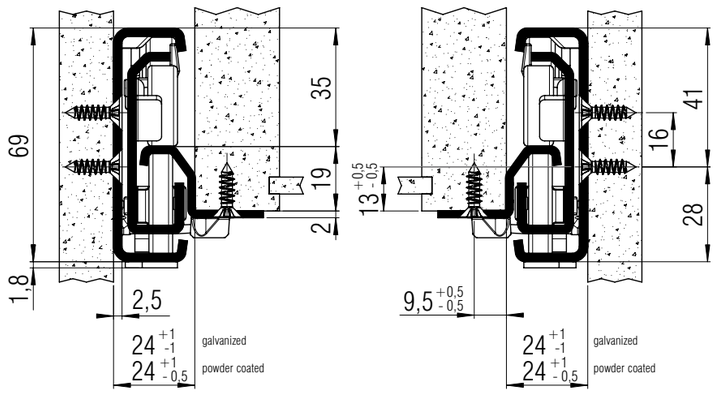

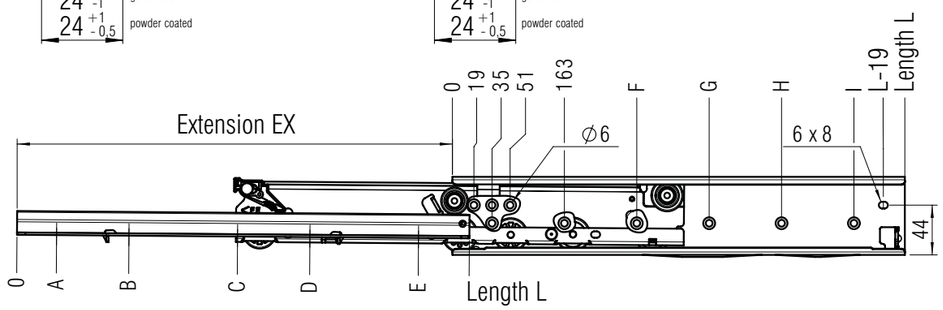

screw holes for 4,5 mm spax screws

L mm	EX full-ext.	A mm	B mm	C mm	D mm	E mm	F mm	G mm	H mm	I mm	Weight per pair (kg)	Order No. galvanized	Order No. lightgrey
400	385	46	238	366			323	355			3,64	▸ **7150**	*
450	435	32	288	416			355	419			4,11	▸ **7151**	*
500	485	50	146	370	466		291	451			4,57	▸ **7152**	*
550	535	36	196	420	516		323	483			5,04	▸ **7153**	*
600	585	22	246	438	566		355	547			5,50	▸ **7154**	*
650	635	40	296	488	616		355	611			5,97	▸ **7155**	*
700	685	26	186	346	538	666	355	515	643		6,43	▸ **7156**	*
750	735	44	204	396	588	716	355	547	675		6,90	▸ **7157**	*
800	785	30	190	446	638	766	355	611	739		7,36	▸ **7158**	*
850	835	48	240	464	688	816	355	611	771		7,83	▸ **7159**	*
900	885	34	290	578	738	866	355	611	835		8,29	▸ **7160**	*
950	935	20	340	628	788	916	355	611	771	899	8,76	▸ **7161**	*
1000	985	38	390	646	838	966	355	643	771	931	9,22	▸ **7162**	▸ **7182**
1200	1185	38	422	710	966	1158	355	675	931	1155	11,50	*	▸ **7184**

Packing Unit: **400-600 mm: 4 sets per box; 650-1000 mm: 2 sets per box; 1200 mm: 1 set per box** ▸ **prompt delivery** ***on request**

FR 5000

SLIDE TYPE:	**Full-Extension Linear Ball Bearing Drawer Slide - Telescopic-Action**
MOUNTING:	Side Mount

WIDTH:	**13 mm**
LOAD CAPACITY:	dynamic up to **45 kg**

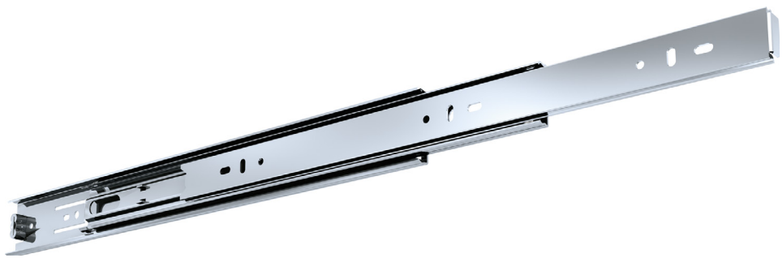

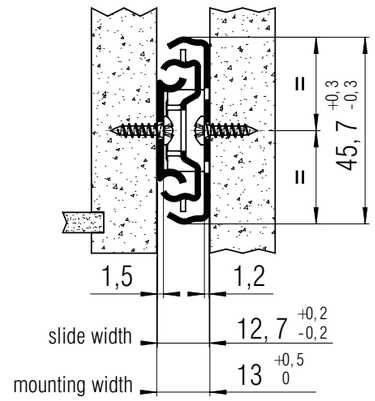

MATERIAL:	steel, galvanized

FEATURES:	linear steel ball bearings

SPECIFICATIONS:

- universal hole pattern
- drawer removal by depressing lever in drawer profile
- stay-closed feature holds drawer in closed position
- tolerance absorbing mounting tabs

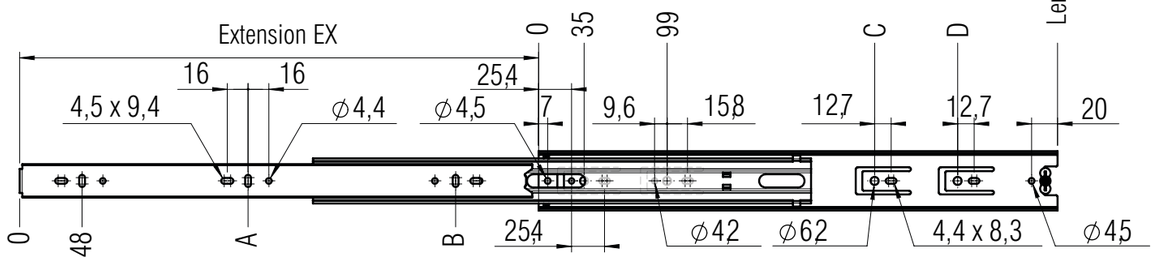

screw holes for 3,5 mm spax screws

L mm	EX mm	A mm	B mm	C mm	D mm	Weight per pair (kg)	Order No. galvanized
250	250		208	195		0,73	▸ **5050**
300	302		240	227		0,89	▸ **5051**
350	354	144	304	291		1,07	▸ **5052**
400	400	176	336	323		1,17	▸ **5053**
450	452	208	400	323	387	1,35	▸ **5054**
500	515	240	464	323	451	1,53	▸ **5055**
550	558	240	496	323	451	1,68	▸ **5056**
600	600	272	560	355	515	1,83	▸ **5057**
650	650	304	592	387	579	1,98	▸ **5058**
700	705	304	656	387	611	2,14	▸ **5059**

Packing Unit: **10 sets per box** ▸ **prompt delivery**

FR 5000 ASW

ACCESSORY:	**Side mount bracket for 5000**
MONTAGE:	Side Mount

WIDTH:	**14 mm**

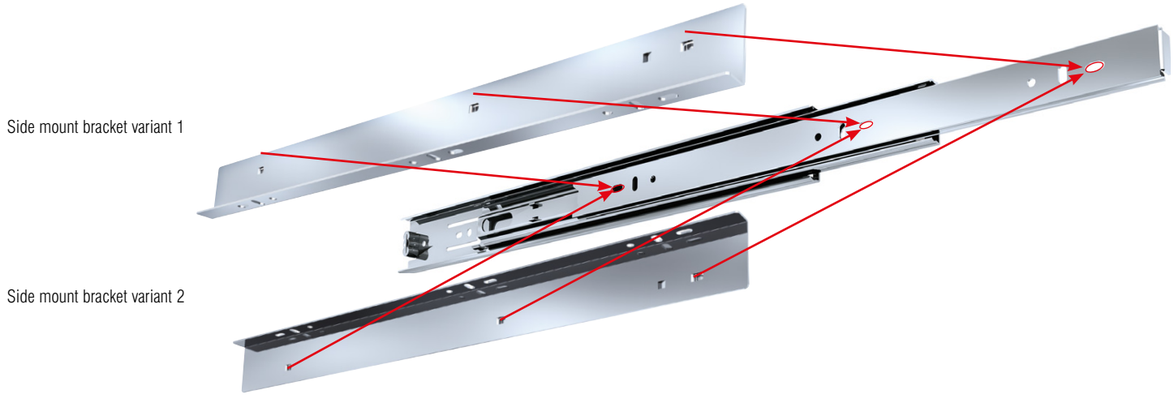

MATERIAL:	steel, bright galvanized

SPECIFICATIONS:

- Special side mount bracket for lateral mounting on FR 5000
- For various mounting variants:
  - Floor mounting
  - Tray mounting
  - Surface-mounted slide mounting

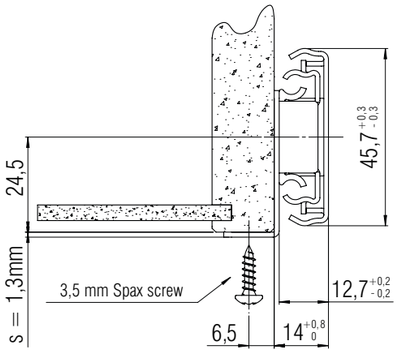

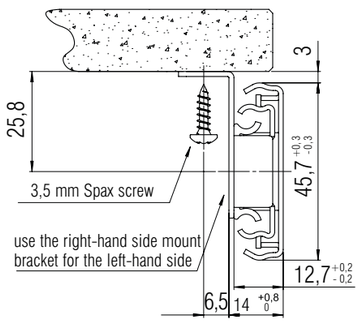

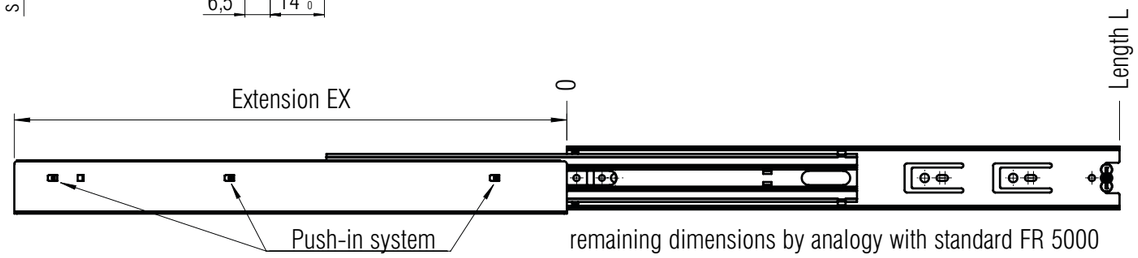

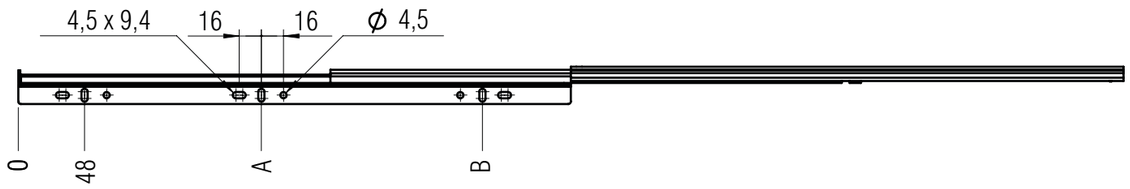

screw holes for 3,5 mm spax screws

Length mount bracket mm	EX	A	B	Weight per pair (kg)	Order No. galvanized
400	400	176	336	0,36	▸ **5032**
450	452	208	400	0,41	▸ **5033**
500	515	240	464	0,46	▸ **5034**
550	558	240	496	0,51	▸ **5035**
Packing Unit: **30 sets per box**					▸ **prompt delivery**

FR 5001 ECD

SLIDE TYPE:	**Full-Extension Linear Ball Bearing Drawer Slide - Telescopic-Action**
MOUNTING:	Side Mount

WIDTH:	**12,7 mm**
LOAD CAPACITY:	dynamic up to **40 kg**

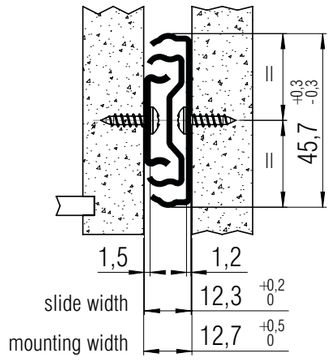

MATERIAL:	steel, galvanized

FEATURES:	linear steel ball bearings

SPECIFICATIONS:

- universal hole pattern 32 mm
- drawer removal by depressing lever in drawer profile
- stay-closed feature holds drawer in closed position
- tolerance absorbing mounting tabs
- **Easy Close Device (ECD)** integrated

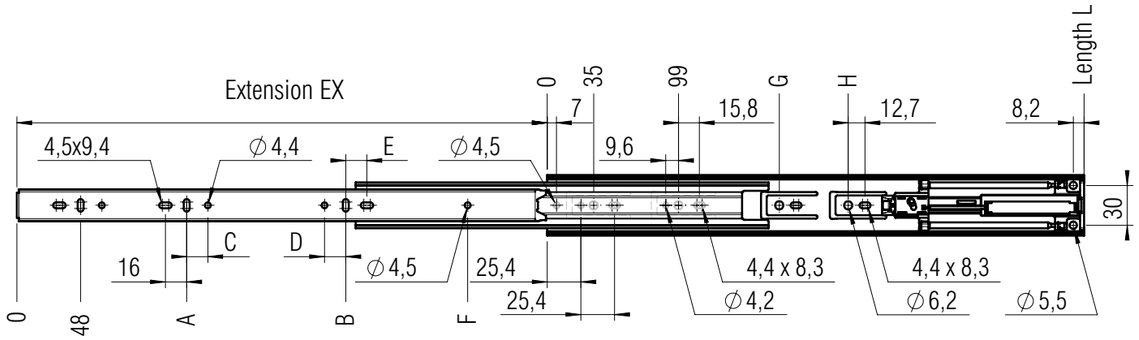

screw holes for 3,5 mm spax screws

L mm	EX mm	A mm	B mm	C mm	D mm	E mm	F mm	G mm	H mm	Weight (kg)	Order No. galvanized
300	245						189			0,8	▸ **5061**
355	350	176						163		1,0	▸ **5062**
405	400	208		16				195		1,1	▸ **5063**
450	450	208		16			336	259		1,3	▸ **5064**
500	500	240	368	16	16	16		291		1,4	▸ **5065**
550	550	272	432	16	16			259	355	1,6	▸ **5066**
600	600	304	464	16	16	16		259	387	1,8	▸ **5067**
650	650	304	496	16	16	16		259	451	1,9	▸ **5068**
700	700	336	560	16	16	16		259	483	2,1	▸ **5069**
Packing Unit: **10 sets per box**											▸ **prompt delivery**

FR 5002 CNS

SLIDE TYPE:	**Full-Extension Linear Ball Bearing Drawer Slide - Telescopic-Action**
MOUNTING:	Side Mount

WIDTH:	**13,1 mm**
LOAD CAPACITY:	dynamic up to **45 kg**

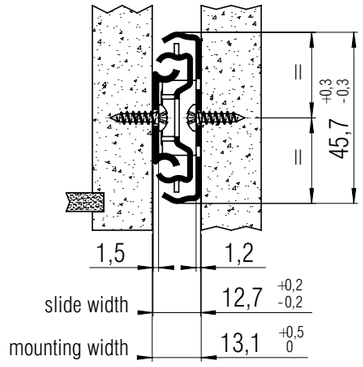

MATERIAL:	stainless steel (1.4301)

FEATURES:	linear steel ball bearings

SPECIFICATIONS:

- universal hole pattern
- drawer removal by depressing lever in drawer profile
- stay-closed feature holds drawer in closed position
- tolerance absorbing mounting tabs

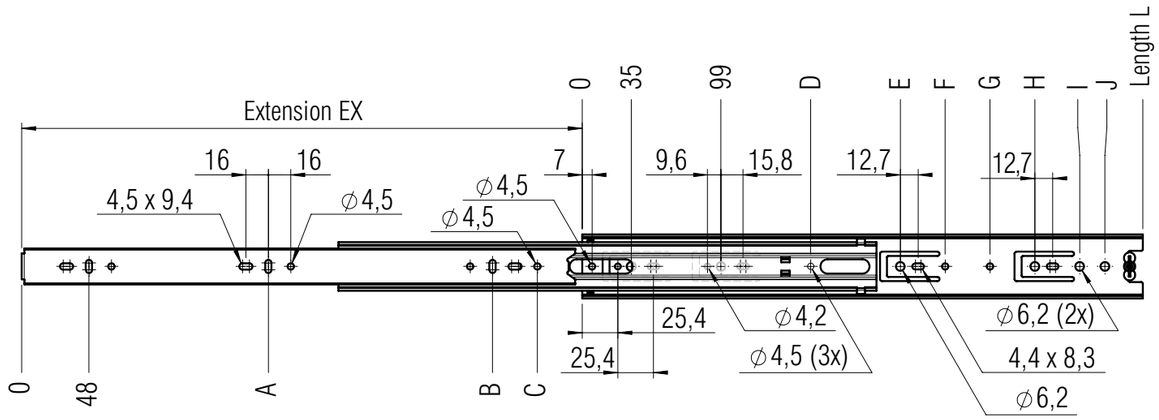

screw holes for 3,5 mm spax screws

L mm	EX mm	A mm	B mm	C mm	D mm	E mm	F mm	G mm	H mm	I mm	J mm	Weight per pair (kg)	Order No. CNS
250	250		208			195	230					*	*
300	300		240	272	163	227	259	279				*	*
350	350	144	304		163	259	317	331				*	*
400	400	176	336	368	163	259		317	355		380	1,2	▸ **5113**
450	450	208	400	319	163	259		317	387		430	1,3	▸ **5114**
500	500	240	464	345	163	259		317	451		480	1,5	▸ **5115**
550	550	272	496	371	163	259	317	387	483	515	530	1,7	▸ **5116**
600	600	272	560			259	317	387	515		579	1,8	▸ **5117**
650	650	304	592			259	317	387	579		630	*	*
700	700	304	656			259	317	387	611		680	*	*
750	750	304	688			259	317	387	675		730	*	*

Packing Unit: **10 sets per box** ▸ **prompt delivery *on request**

FR 5036

SLIDE TYPE:	**Full-Extension Linear Ball Bearing Drawer Slide - Telescopic-Action**
MOUNTING:	Side Mount

WIDTH:	**13 mm**
LOAD CAPACITY:	dynamic up to **30 kg**

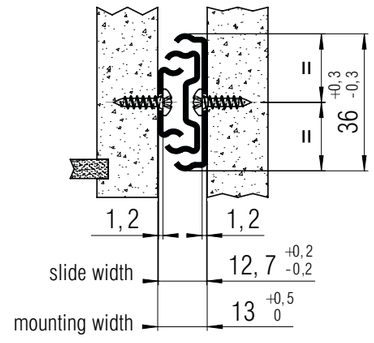

MATERIAL:	steel, bright galvanized

FEATURES:	linear steel ball bearings

SPECIFICATIONS:

- universal hole pattern
- drawer removal possible
- tolerance absorbing mounting tabs
- **self-closing**

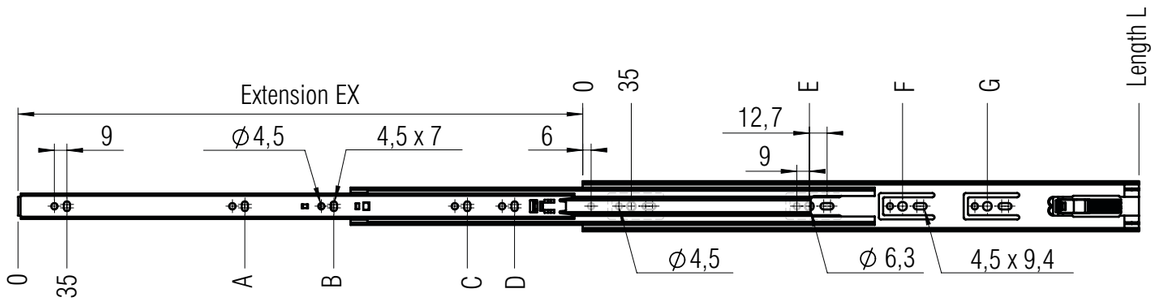

screw holes for 3,5 mm spax screws

L mm	EX mm	A mm	B mm	C mm	D mm	E mm	F mm	G mm	Weight per pair (kg)	Order No. galvanized
250	254	207				131			0,58	▸ **5080**
300	305	163	257			195			0,69	▸ **5081**
350	356	163	307			163	259		0,82	▸ **5082**
400	406	163	357			163	291		0,92	▸ **5083**
450	457	163	355	407		163	355		1,06	▸ **5084**
500	508	163	227	387	457	163	323	387	1,15	▸ **5085**
550	559	163	259	451	507	163	323	451	1,27	▸ **5086**
600	610	163	259	451	557	163	355	483	1,39	▸ **5087**

Packing Unit: **20 sets per box** ▸ **prompt delivery**

FR 5052

SLIDE TYPE:	**Full-Extension Linear Ball Bearing Drawer Slide - Telescopic-Action**
MOUNTING:	Side Mount

WIDTH:	**13 mm**
LOAD CAPACITY:	dynamic up to **90 kg**

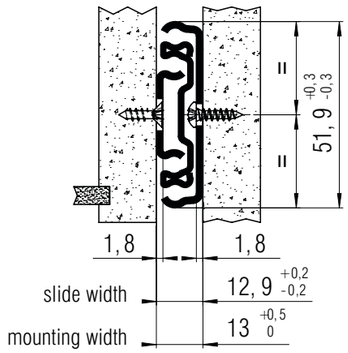

MATERIAL:	steel, bright galvanized

FEATURES:	linear steel ball bearings

SPECIFICATIONS:

- universal hole pattern
- Drawer can be lifted out by pressing down the release lever in the drawer rail
- Retainer holds the drawer securely in the closed position

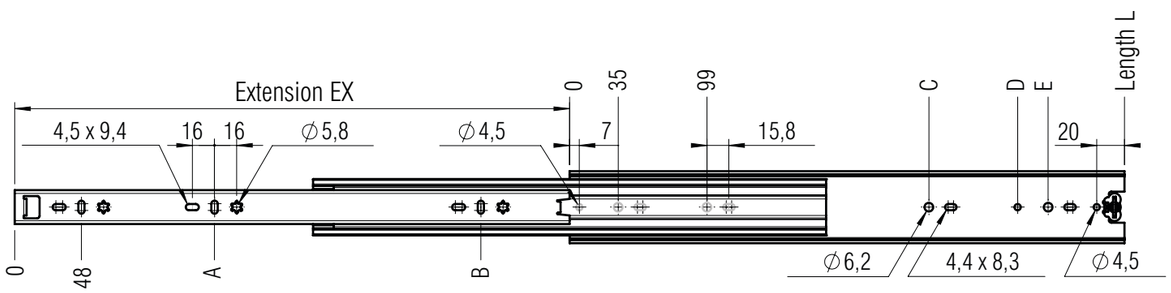

screw holes for 3,5 mm spax screws

L mm	EX mm	A mm	B mm	C mm	D mm	E mm	Weight per pair (kg)	Order No. galvanized
300*	300	240		227			*	*
350*	350	112	304	259			1,59	▸ **5152**
400*	400	144	336	259	323		1,83	▸ **5153**
450*	450	176	400	259	323	387	2,05	▸ **5154**
500**	500	176	464	259	323	451	2,36	▸ **5155**
550**	550	208	496	259	323	451	2,69	▸ **5156**
600***	600	240	560	259	323	515	2,80	▸ **5157**
650***	650	240	560	259	323	579	3,05	▸ **5158**
700***	700	272	656	259	323	611	3,30	▸ **5159**

Packing Unit (per box): ***10 sets** ****8 sets** *****6 sets** ▸ **prompt delivery** ***on request**

FR 5400

SLIDE TYPE:	**Full-Extension Linear Ball Bearing Drawer Slide - Telescopic-Action**
MOUNTING:	Side Mount

WIDTH:	**19,3 mm**
LOAD CAPACITY:	dynamic up to **250 kg**

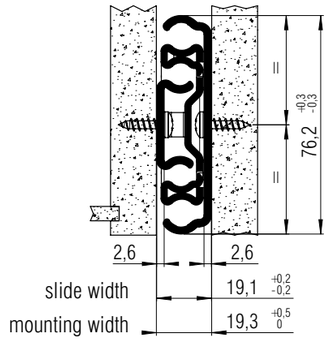

MATERIAL:	steel, bright galvanized

FEATURES:	linear steel ball bearings

SPECIFICATIONS & NOTES:

- ball bearing drawer slide with the heaviest load capacity
- non-handed
- non-detachable

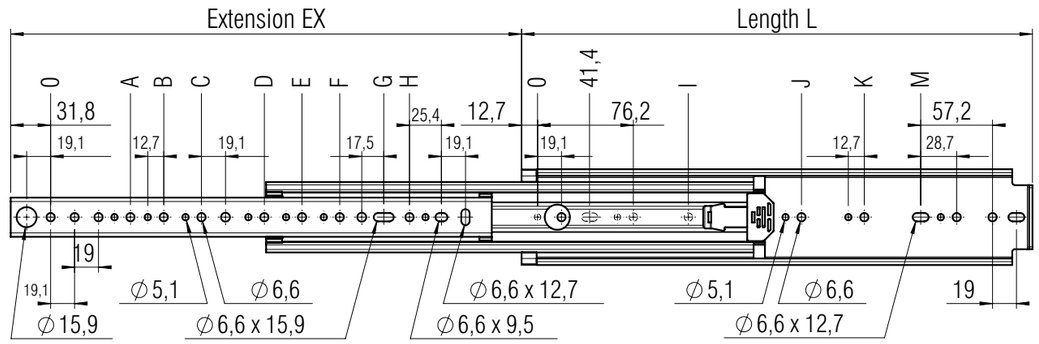

Screw on holes for M5 and M6 (maximum screw head dimension D=12,7 and H=4,8)

L mm	EX mm	A mm	B mm	C mm	D mm	E mm	F mm	G mm	H mm	I mm	J mm	K mm	M mm	Load Cap. (kg)	Weight per pair (kg)	Order No. full-ext.
355,6	355,6	63,5							204,7				254,0	130	3,5	▸ **5503**
406,4	406,4	63,5	127						255,5				304,8	180	4,0	▸ **5504**
457,2	457,2	63,5	127					246,1	306,3				355,6	250	4,6	▸ **5505**
508,0	508,0	63,5	127	190,5				296,9	357,1				406,4	250	5,1	▸ **5506**
558,8	558,8	63,5	127	190,5				347,7	407,9				457,2	250	5,6	▸ **5507**
609,6	609,6	63,5	127	190,5				398,5	458,7				508,0	250	6,1	▸ **5508**
660,4	660,4	63,5	127	190,5				449,3	509,5				558,8	250	6,6	▸ **5509**
711,2	711,2	63,5	127	190,5				500,1	560,3				609,6	250	7,1	▸ **5510**
762,0	762,0	63,5	127	190,5	368,3			550,9	611,1	235		501,6	660,4	230	7,6	▸ **5511**
812,8	812,8	63,5	127	190,5	368,3			601,7	661,9	235	393,7	552,5	711,2	230	8,1	▸ **5512**
863,3	863,3	63,5	127	190,5	368,3	469,9		652,5	712,7	235	419,1	603,3	762,0	230	8,6	▸ **5513**
914,4	914,4	63,5	127	190,5	368,3	520,7		703,3	763,5	235	444,5	654,1	812,8	230	9,1	▸ **5514**
965,2	965,2	63,5	127	190,5	368,3	520,7		754,1	814,3	235	469,9	704,9	863,6	230	9,6	▸ **5515**
1016,0	1016,0	63,5	127	190,5	368,3	520,7		804,9	865,1	235	495,3	755,7	914,4	230	10,3	▸ **5516**
1066,8	1066,8	63,5	127	190,5	368,3	520,7		855,7	915,9	235	546,1	806,5	965,2	200	11,0	▸ **5517**
1117,6	1117,6	63,5	127	190,5	368,3	520,7		906,5	966,7	235	546,1	857,3	1016,0	200	11,4	▸ **5518**
1168,4	1168,4	63,5	127	190,5	368,3	520,7		957,3	1017,5	235	571,5	908,1	1066,8	200	11,8	▸ **5519**
1219,2	1219,2	63,5	127	190,5	368,3	520,7	825,5	1008,1	1068,3	235	596,9	958,8	1117,6	180	12,3	▸ **5520**
1270,0	1270,0	63,5	127	190,5	368,3	520,7	825,5	1058,9	1119,1	235	596,9	958,8	1168,4	180	12,7	▸ **5521**
1320,8	1320,8	63,5	127	190,5	368,3	520,7	825,5	1109,7	1169,9	235	596,9	958,8	1219,2	170	13,2	▸ **5522**
1371,6	1371,6	63,5	127	190,5	368,3	520,7	825,5	1160,5	1220,7	235	596,9	958,8	1270,0	170	13,6	▸ **5523**
1422,4	1422,4	63,5	127	190,5	368,3	520,7	825,5	1211,3	1271,5	235	596,9	958,8	1320,8	150	14,1	▸ **5524**
1473,2	1473,2	63,5	127	190,5	368,3	520,7	825,5	1262,1	1322,3	235	596,9	958,8	1371,6	150	14,6	▸ **5525**
1524,0	1524,0	63,5	127	190,5	368,3	520,7	1130,5	1312,9	1373,1	235	596,9	958,8	1422,4	150	15,4	▸ **5526**

Packing Unit: **up to 609,6 mm 4 sets per box, from 660,4 mm 2 sets per box, from 914,4 mm 1 set per box** ▸ **prompt delivery**

FR 5400 L

SLIDE TYPE:	**Full-Extension Drawer Slide with Locking Mechanism**
MOUNTING:	Side Mount

WIDTH:	**19.1 mm**
LOAD CAPACITY:	dynamic up to **250 kg**

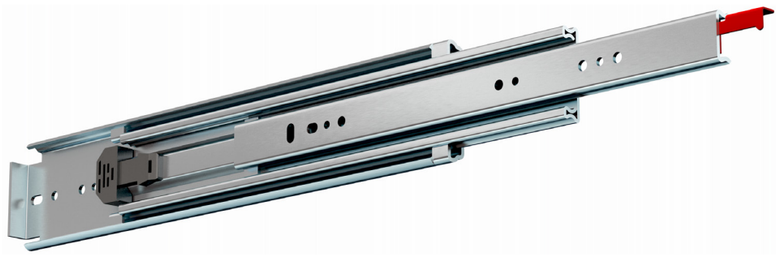

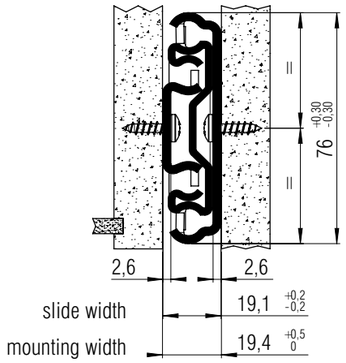

MATERIAL:	steel, bright galvanized

FEATURES:	linear steel ball bearings

SPECIFICATIONS & NOTES:

- ball bearing drawer slide with very high load capacity
- locking mechanism in closed and opened position
- slides are handed
- non-detachable drawer slide

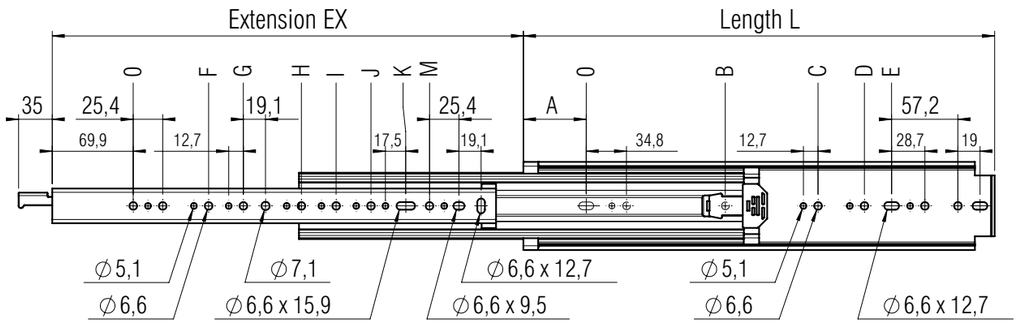

Screw on holes for M5 and M6 (maximum screw head dimension D=12,7 and H=4,8)

L mm	EX mm	A mm	B mm	C mm	D mm	E mm	F mm	G mm	H mm	I mm	J mm	K mm	M mm	Load Cap. (kg)	Weight per pair (kg)	Order No. full-ext.
355,6	355,6	54,1				212,6							166,6	130	3,6	**5603**
406,4	406,4	54,1				263,4	88,9						217,4	180	4,2	**5604**
457,2	457,2	54,1				314,2	88,9						268,2	250	4,7	**5605**
508,0	508,0	54,1				365,0	88,9					258,8	319,0	250	5,2	**5606**
558,8	558,8	54,1				415,8	88,9	152,4				309,6	369,8	250	5,7	**5607**
609,6	609,6	54,1				466,6	88,9	152,4				360,4	420,6	250	6,2	**5608**
660,4	660,4	54,1				517,4	88,9	152,4				411,2	471,4	250	6,8	**5609**
711,2	711,2	54,1				568,2	88,9	152,4				462,0	522,2	250	7,3	**5610**
762,0	762,0	54,1	193,6		460,3	619,0	88,9	152,4				512,8	573,0	230	7,7	**5611**
812,8	812,8	54,1	193,6	352,3	511,1	669,8	88,9	152,4				563,6	623,8	230	8,3	**5612**
863,6	863,6	54,1	193,6	377,7	561,9	720,6	88,9	152,4	330,2	431,8		614,4	674,6	230	8,8	**5613**
914,4	914,4	54,1	193,6	403,1	612,7	771,4	88,9	152,4	330,2	482,6		665,2	725,4	230	9,2	**5614**
965,2	965,2	54,1	193,6	428,5	663,5	822,2	88,9	152,4	330,2	482,6		716,0	776,2	230	9,7	**5615**
1016	1016	54,1	193,6	504,7	714,3	873,0	88,9	152,4	330,2			766,8	827,0	230	10,4	**5616**
1066,8	1066,8	54,1	193,6	504,7	765,1	923,8	88,9	152,4	330,2			817,6	877,8	200	11,1	**5617**
1117,6	1117,6	54,1	193,6	504,7	815,9	974,6	88,9	152,4	330,2			868,4	928,6	200	11,5	**5618**
1168,4	1168,4	54,1	193,6	530,1	866,7	1025,4	88,9	152,4	330,2	482,6	787,4	919,2	979,4	200	12,0	**5619**
1219,2	1219,2	54,1	193,6	555,5	917,5	1076,2	88,9	152,4	330,2	482,6	787,4	970,0	1030,2	180	12,4	**5620**
1270,0	1270,0	54,1	193,6	555,5	917,5	1127,0	88,9	152,4	330,2	482,6	787,4	1020,8	1081,0	180	12,8	**5621**
1320,8	1320,8	54,1	193,6	555,5	917,5	1177,8	88,9	152,4	330,2	482,6	787,4	1071,6	1131,8	170	13,3	**5622**
1371,6	1371,6	54,1	193,6	555,5	917,5	1228,6	88,9	152,4	330,2	482,6	787,4	1122,4	1182,6	170	13,8	**5623**
1422,4	1422,4	54,1	193,6	555,5	917,5	1279,4	88,9	152,4	330,2	482,6	787,4	1173,2	1233,4	150	14,2	**5624**
1473,2	1473,2	54,1	193,6	555,5	917,5	1330,2	88,9	152,4	330,2	482,6	787,4	1224,0	1284,2	150	14,7	**5625**
1524,0	1524,0	54,1	193,6	555,5	917,5	1381,0	88,9	152,4	330,2	482,6	1092,4	1274,8	1335,0	150	15,5	**5626**

Packing Unit: **up to 609,6 mm 4 sets per box, from 660,4 mm 2 sets per box, from 914,4 mm 1 set per box** — **prompt delivery**

*Alongated hole at position A will be standard hole Ø6,6
**hole at position L will be dispensed

Notes.

Special solutions.

Sometimes you reach the limit with standard solutions and you need **specially fabricated products.** We are only too happy to use our skills to assist you in this case. We place particular importance on establishing a collaborative working relationship, and we are happy to place our **advisory, product and application related know-how** at your disposal. In this way we can satisfy your wishes and requirements to best effect.

The **door display slide FR 505-T** for ceiling-mounting has a load-carrying capacity of up to 80 kg and is the optimum solution for the attachment of display boards in showrooms and presentation areas.

The **differential, floor-mounted pantry pull out slides FR 775** , **FR 771 and FR 777** are well suited fur pull-out cupboards in the home, in kitchens, pharmacies and doctors surgeries, as well as for filing cabinets and vertical cupboards for office furniture.

The modular aluminium sliding system **FR 9000** is particularly useful for floor and side-mounting. The special aluminium profile, combined with roller mounts and stops, delivers a wide range of installation options. The emphasis in this case is particularly on lightweight design, whether in vehicle construction or in the assembly industry.

TYPE	MODEL	MOUNT	WIDTH	CAPACITY	PAGE
	SPECIAL SOLUTIONS				**40**
Reg.-Ext. Door Display Slide	▸ **FR 505-T**	Top Mount	73 mm	80 kg	**42**
Full-Ext. Progr.-Action pull out	▸ **FR 775-A**	Bottom Mount	88,5 mm	75 kg	**43**
Full-Ext. Progr.-Action pull out	▸ **FR 771**	Bottom Mount	108 mm	120 kg	**44**
Sliding absorption system	▸ **FR 771 ECD**				**46**
Full-Ext. Progr.-Action pull out	▸ **FR 777**	Bottom Mount	124 mm	200 kg	**47**
Sliding absorption system	▸ **FR 777 ECD**				**50**
Modular Aluminium system	▸ **FR 9000**	Bottom and Side Mount	56 mm	200 kg	**51**

FR 505-T

SLIDE TYPE:	**Door Display Slide**
MOUNTING:	Top Mount

WIDTH:	min. **73 mm**
LOAD CAPACITY:	dynamic up to **80 kg**

MATERIAL:	steel, powder coated

FEATURES:	delrin*- encased steel ball bearings

SPECIFICATIONS:

- for use in all types of showrooms and shops with display walls, door panels etc.
- offers absolute lateral stability as a pre-mounted unit with a special profile form
- light, rigid and silent movement via special roller assembly
- simple assembly via countersunk fixing holes for M6 countersunk screws
- built-in friction stop in the closed and extended position

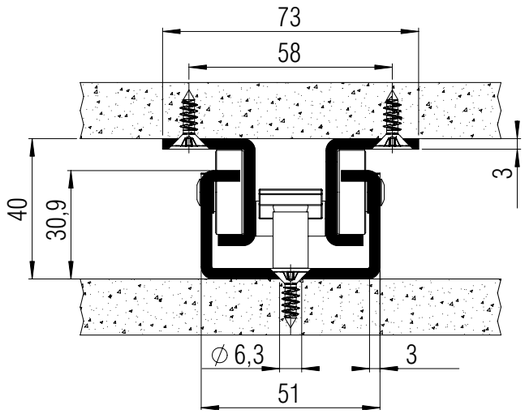

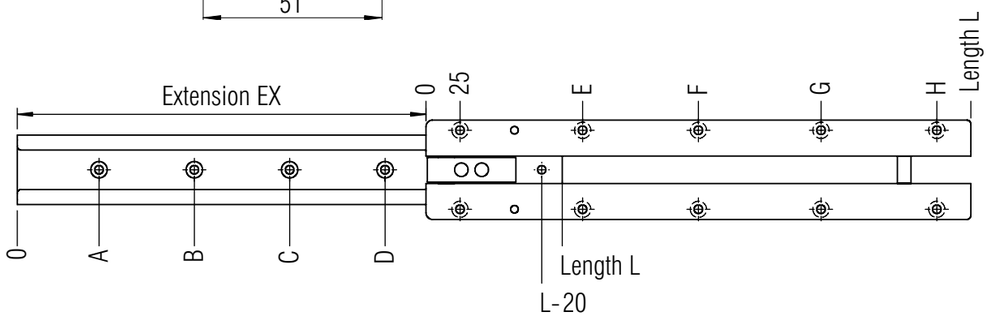

screw holes for 5 mm spax screws / M6 countersunk screws

L mm	EX mm	A mm	B mm	C mm	D mm	E mm	F mm	G mm	H mm	Weight per set (kg)	Order No. black	Order No. white
450	340	60	250			115	340			*	*	*
500	375	60	300			115	390			*	*	*
600	450	60	400			115	490			*	*	*
700	525	210	450			115	540			*	*	*
800	600	210	550			115	640			*	*	*
900	675	160	600			115	690			*	*	*
995	750	160	700			115	785			5,73	▸ **80134**	*
1050	790	25	275	525	775	275	525	775	1025	*	*	*
1100	825	160	700			115	215	870		*	*	*

Packing Unit: **4 sets per box** ▸ **prompt delivery** * **on request**

FR 775-A

SLIDE TYPE:	**Progressive action full-extension pantry pull out slide with top slide**
MOUNTING:	Bottom Mount

WIDTH:	min. **88,5 mm**
LOAD CAPACITY:	dynamic up to **75 kg**

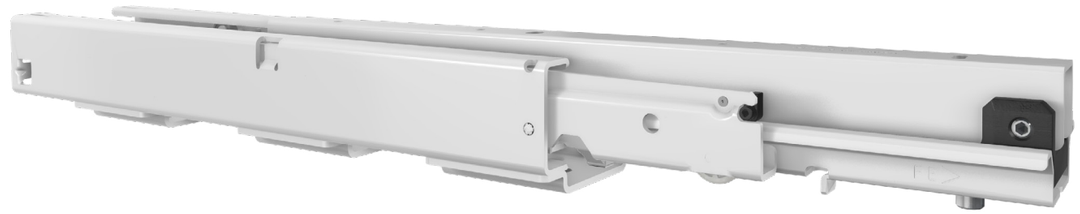

ECD

MATERIAL:	steel, powder coated

FEATURES:	delrin*- encased steel ball bearings

SPECIFICATIONS & NOTES:

- quick and easy installation through patented system
- optimum and quiet movement
- integrated lateral and height adjustment
- top slide for absolute lateral stability
- **Easy Close Device (ECD)** integrated (top and bottom slide)

Do not lubricate the slide anywhere!

Recommended maximal cabinet height: 1500mm

*DuPont (TM) Delrin®

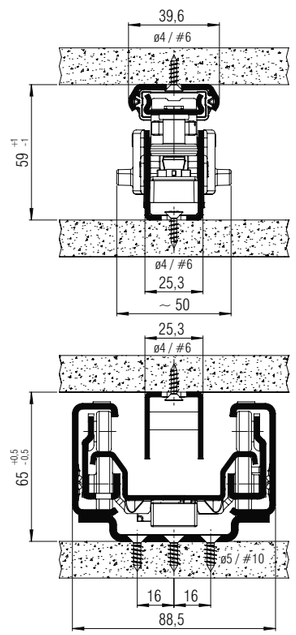

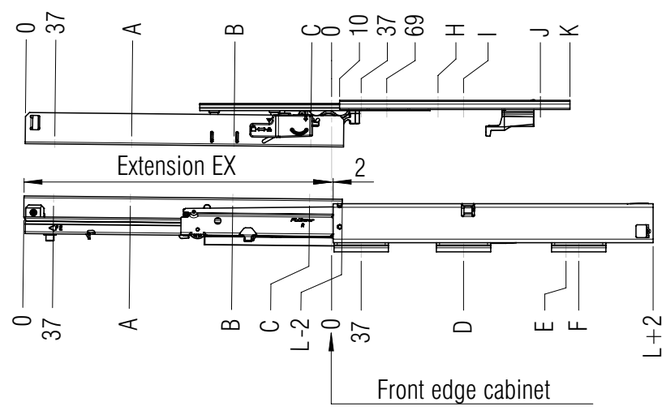

screw holes for 4,0 mm and 5,0 mm spax screws

L mm	EX mm	A mm	B mm	C mm	D mm	E mm	F mm	H mm	I mm	J mm	K mm	Weight per set (kg)	Order No. white
400	385	133	261	357		293		133	165	261	298	4,9	▸ **4201**
430	415	133	261	389			325	133	165	261	298	5,4	▸ **4202**
450	435	133	261	421			357	133	165	261	298	6,1	▸ **4203**
480	465	165	325	453			389	197	229	357	394	6,6	▸ **4204**
500	485	165	325	453			389	197	229	357	394	7,3	▸ **4205**
550	535	197	357	517			453	197	229	357	394	7,9	▸ **4206**
600	585	197	389	549	229		485	197	229	357	394	8,2	▸ **4207**
650	635	229	421	613	261		549	197	229	357	394	8,7	▸ **4208**
700	685	261	485	645	293		581	197	229	357	394		
750	735	261	485	709	325		645	197	229	357	394		

Packing Unit: **1 set per box** ▸ **prompt delivery**

FR 771

TYPE:	**Progressive action full-extension pantry pull out slide with top slide**	**WIDTH:**	min. **108 mm** min. **115 mm (ECD)**
MOUNTING:	Bottom Mount	**LOAD:**	dynamic up to **120 kg**

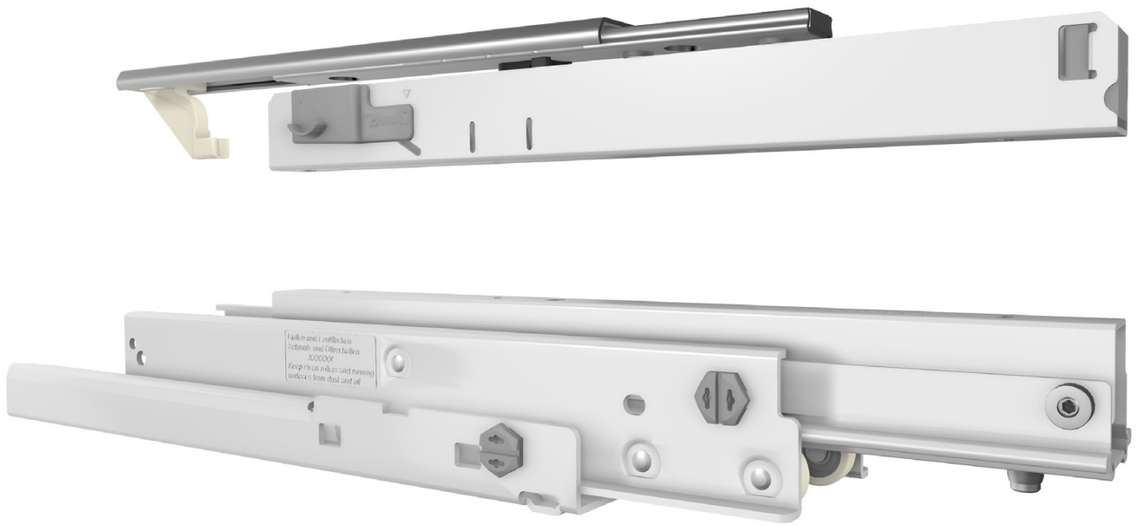

ECD

MATERIAL:	steel, white powder coated

FEATURES:	solid delrin* rollers, delrin*- encased steel ball bearings

SPECIFICATIONS:

- deflection in extended and loaded position maximum 5mm
- quick and easy installation through unique system
- optimum and quiet movement, even under heaviest loads
- integrated lateral and height adjustment
- top slide for absolute lateral stability
- simple assembly of the pullout unit via countersunk fixing holes for M6 countersunk screws

Do not lubricate the slide anywhere!

NEW - Easy Close System **FR 771 ECD** option

*DuPont (TM) Delrin®

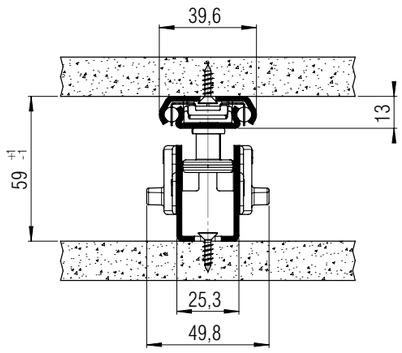

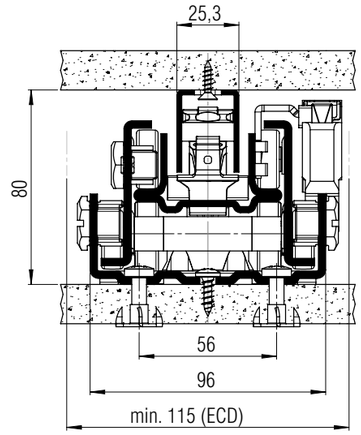

L mm	Weight per set (kg)	Order No.
400	5,9	▸ **7751**
430	*	*
450	6,5	▸ **7752**
480	*	*
500	7,4	▸ **7753**
550	8,1	▸ **7754**
600	8,7	▸ **7755**
650	9,3	▸ **7756**
700	10,0	▸ **7757**
750	10,7	▸ **7758**
Packing Unit: **1 set per box**	▸ **prompt delivery * on request**	

Fulterer

FR 771

TYPE:	**Progressive action full-extension pantry pull out slide with top slide**	**WIDTH:**	min. **108 mm** min. **110 mm (ECD)**
MOUNTING:	Bottom Mount	**LOAD:**	dynamic up to **120 kg**

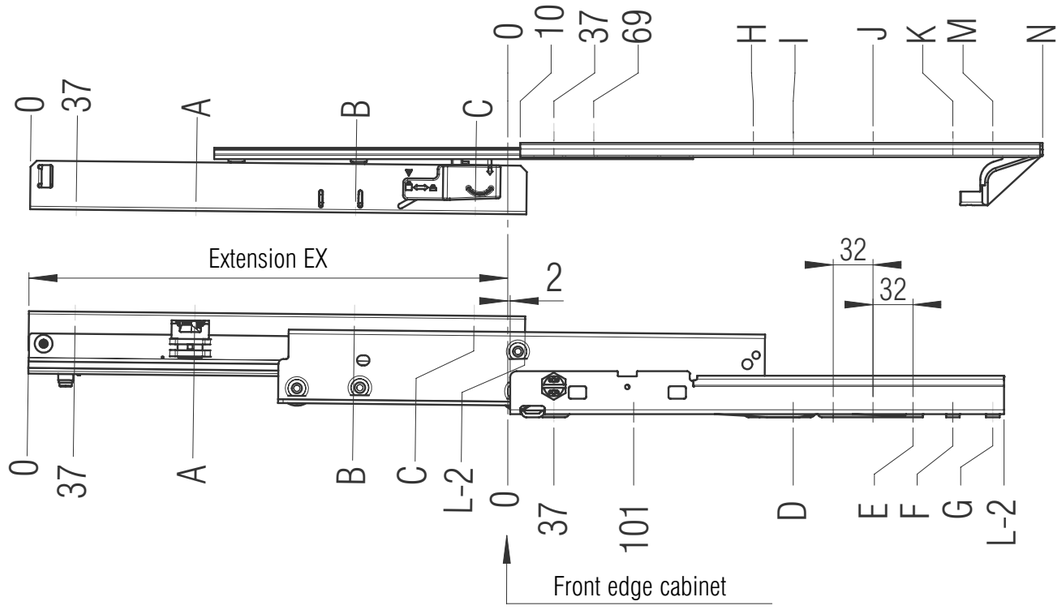

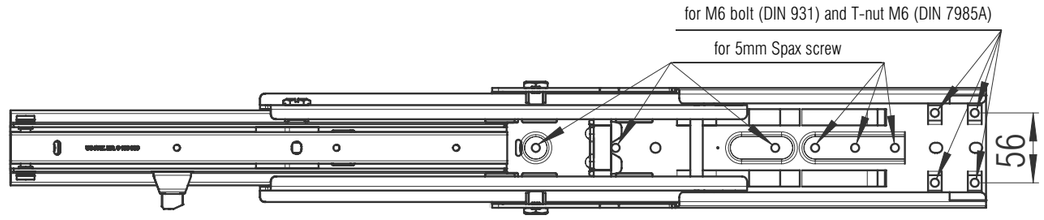

unmarked holes for 4mm (US #6) countersunk screws

L mm	EX mm	A mm	B mm	C mm	D mm	E mm	F mm	G mm	H mm	I mm	J mm	K mm	M mm	N mm
400	384	133	261	357	229	357	389		133	165		261	293	333
430	414	133	261	389	229	357	389		133	165		261	293	333
450	434	133	261	421	229	389	421		133	165		261	293	333
480	464	165	325	453	261	421	453		197	229	293	357	389	429
500	484	165	325	453	261	421	453	485	197	229	293	357	389	429
550	534	197	357	517	293	485	517		197	229	293	357	389	429
600	584	197	389	549	325	517	549	581	197	229	293	357	389	429
650	634	229	421	613	357	549	581	613	197	229	293	357	389	429
700	684	261	485	645	357	613	645	677	197	229	293	357	389	429
750	734	261	485	709	389	645	677	709	197	229	293	357	389	429

Fulterer

FR 771 ECD

EASY-CLOSE SYSTEM	**Sliding absorption system Upgrade set for pantry pull out slide FR 771**	**MATERIAL:**	Plastic, steel

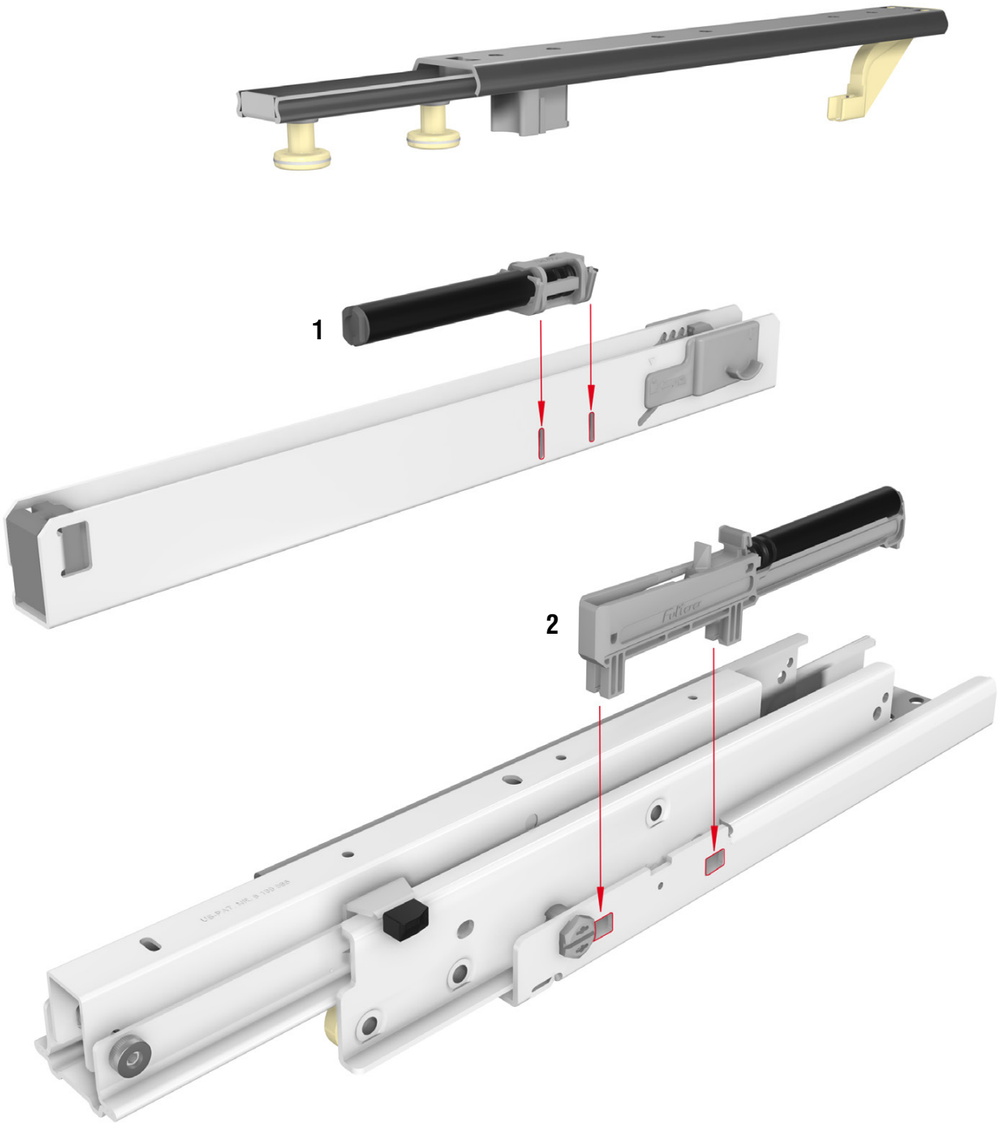

DELIVERY SPECIFICATIONS:

top slide:
- 1. 1 x Dampening Cylinder, snap-on

bottom slide:
- 2. 1 x Dampening Cylinder, snap-on
- assembly instructions

ASSEMBLY:
- **top slide:** assemble 1 as illustrated
- **bottom slide:** assemble 2 as illustrated

FUNCTION:
- the easy close automatic/self-closing and slam-resistant function is not compromised by varying load conditions
- During the last 75 mm of the closing motion the pull-out is decelerated and then softly pulled closed all the way.
- no pinching of fingers
- no contents falling over, etc.

Designation	Order No.
FR 771 ECD – Upgrade set for pantry pull out unit FR 771	**7759**
Packing Unit: **1 set per polybag**	**prompt delivery**

FR 777

SLIDE TYPE:	**Progressive action full-extension pantry pull out unit with top slide**	**MEASURES:**	min. **124 mm** min. **158 mm (ECD)**
MOUNTING:	Bottom Mount	**CAPACITY:**	dynamic up to **200 kg**

FR 777

SLIDE TYPE:	**Progressive action full-extension pantry pull out slide with top slide**	**MEASURES:**	min. **124 mm** min. **158 mm (ECD)**
MOUNTING:	Bottom Mount	**CAPACITY:**	dynamic up to **200 kg**

ECD

MATERIAL:	steel, white powder coated
FEATURES:	solid delrin* rollers, delrin*- encased steel ball bearings

SPECIFICATIONS & NOTES:

- no deflection in fully extended position
- quick and easy installation through unique system
- optimum and quiet movement, even under heaviest loads
- integrated lateral and height adjustment
- top slide for absolute lateral stability
- simple assembly of the pullout unit via countersunk fixing holes for M6 countersunk screws

Do not lubricate the slide anywhere!

Easy Close System **FR 777 ECD** option

*DuPont (TM) Delrin®

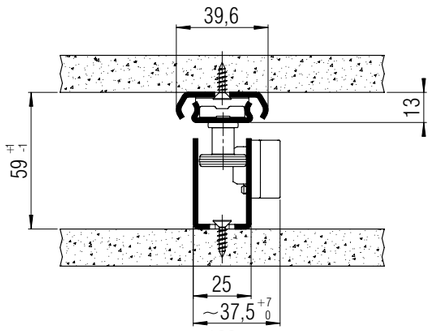

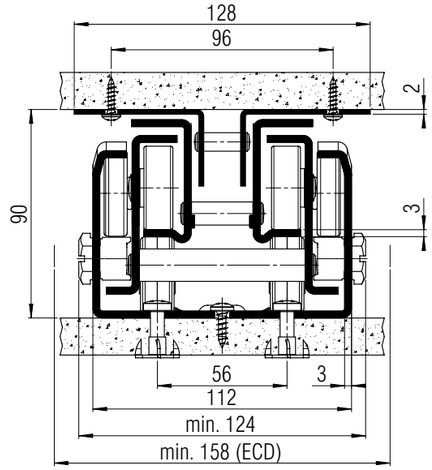

L mm	Weight per set (kg)	Order No.
400	9,0	▸ **7720**
450	10,0	▸ **7721**
500	11,0	▸ **7722**
550	12,3	▸ **7723**
600	13,0	▸ **7724**
650	14,3	▸ **7725**
700	15,0	▸ **7726**
750	16,3	▸ **7727**
800	17,0	▸ **7728**
850	18,0	▸ **7729**
900	19,0	▸ **7730**
950	20,0	▸ **7731**
1000	21,3	▸ **7732**
1100	23,0	▸ **7733**

Packing Unit:
1 set per box ▸ **prompt delivery**

FR 777

SLIDE TYPE:	**Progressive action full-extension pantry pull out slide with top slide**	**MEASURES:**	min. **124 mm** min. **158 mm (ECD)**
MOUNTING:	Bottom Mount	**CAPACITY:**	dynamic up to **200 kg**

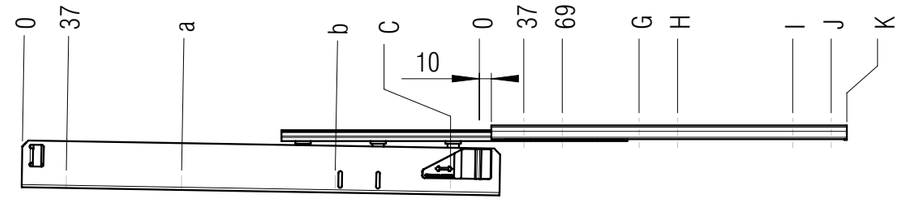

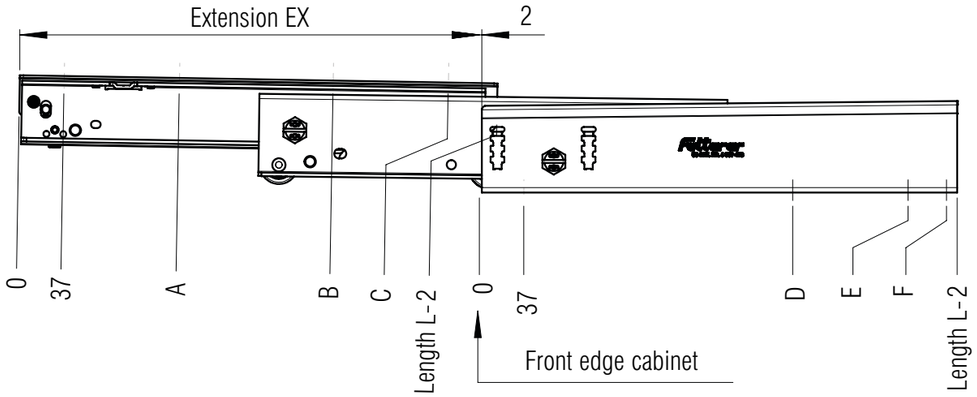

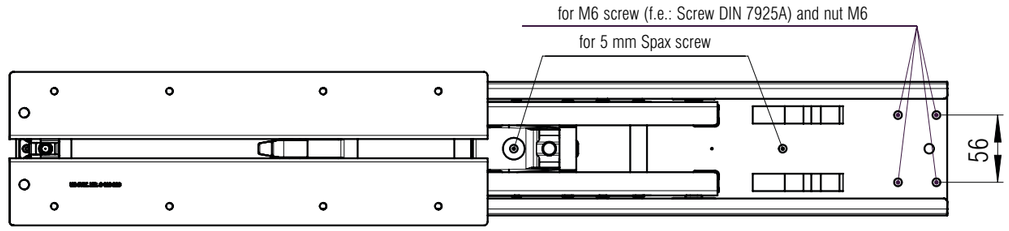

unmarked holes for 4mm (US #6) countersunk screws

L mm	EX mm	A mm	a mm	B mm	b mm	C mm	D mm	E mm	F mm	G mm	H mm	I mm	J mm	K mm
400	384	133	133	261	261	357		357	389	133	165	261	293	306
450	434	133	133	261	261	421		389	421	133	165	261	293	306
500	484	165	165	325	325	453		421	453	197	229	357	389	402
550	534	197	197	357	357	517		485	517	197	229	357	389	402
600	584	197	197	389	357	549		517	549	197	229	357	389	402
650	634	229	229	421	421	613		581	613	197	229	357	389	402
700	684	261	261	485	485	645	549	613	645	197	229	357	389	402
750	734	261	261	485	485	709	581	677	709	197	229	357	389	402
800	784	293	293	549	549	773	645	741	773	197	229	357	389	402
850	834	293	293	549	549	805	677	773	805	197	229	357	389	402
900	884	325	325	581	581	869	709	837	869	197	229	357	389	402
950	934	325	325	613	613	901	741	869	901	197	229	357	389	402
1000	984	325	325	645	645	965	773	933	965	197	229	357	389	402
1100	1084	389	357	741	741	1061	869	1029	1061	197	229	357	389	402

FR 777 ECD

EASY-CLOSE SYSTEM	**Sliding absorption system Upgrade set for pantry pull out slide FR 777**
MATERIAL:	Plastic, steel

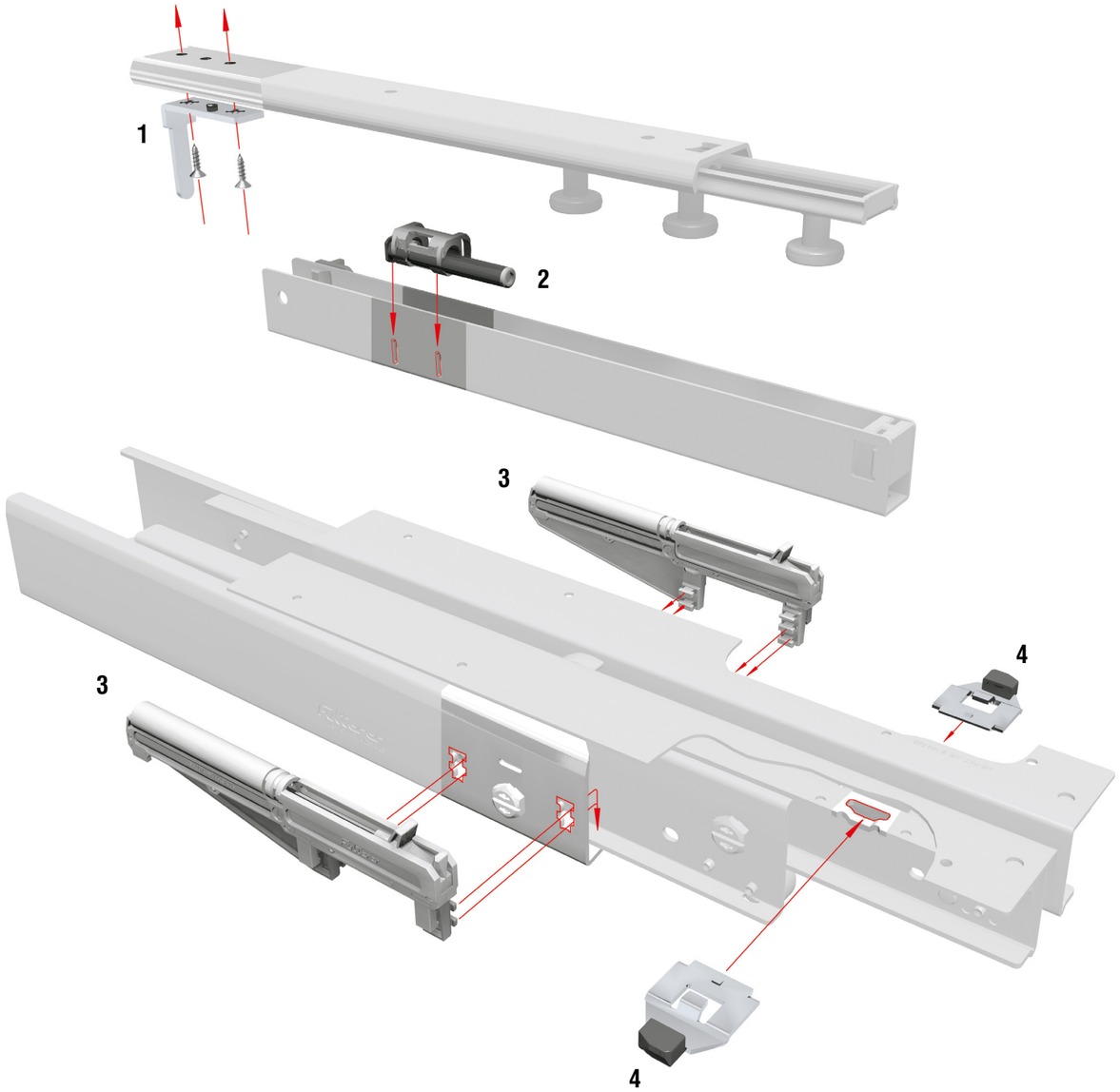

DELIVERY SPECIFICATIONS:

top slide:
- 1. 1 x Strike, screw mounted
  2 x Screw
- 2. 1 x Dampening Cylinder, snap-on

bottom slide:
- 3. 2 x Easy Close Dampening Cylinder, snap-on
- 4. 2 x Follower, snap-on

- assembly instructions

ASSEMBLY:
- **top slide:**
  assemble 1 and 2 as illustrated
- **bottom slide:**
  snap 3 and 4 into place as illustrated

FUNCTION:
- the easy close automatic/self-closing and slam-resistant function is not compromised by varying load conditions
- During the last 75 mm of the closing motion the pull-out is decelerated and then softly pulled closed all the way.
- no pinching of fingers
- no contents falling over, etc.

Designation	Order No.
FR 777 ECD – Upgrade set for pantry pull out unit FR 777	**3430**
Packing Unit: **1 set per polybag**	**prompt delivery**

FR 9000

SLIDE TYPE:	**Regular-Extension Aluminium Drawer Slide**
MOUNTING:	Bottom and Side Mount

WIDTH:	**56 mm**
LOAD CAPACITY:	dynamic up to **200 kg**

MATERIAL:	Aluminium
FEATURES:	nylon rollers and nylon-encased ball bearings

SPECIFICATIONS & NOTES:
- modular sliding system comprised of aluminum components for a wide variety of applications
- 200 kg weight capacity, regular extension is approximately 70 % of profile's length
- the special interior shape of the profile compensates for installation inaccuracies in width, height and angular direction
- a recess for a M6 (DIN7984) Allan head bolt with a centerline groove to accurately mark the position of the holes
- simple and secure fastening

ⓘ the system FR9000 can be obtained completely assembled or all parts separately to be fabricated by the user enabling to produce odd sizes with the individual components

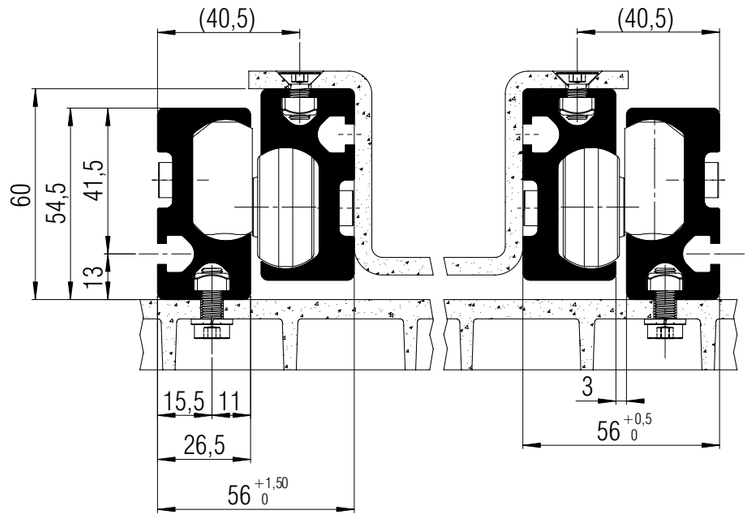

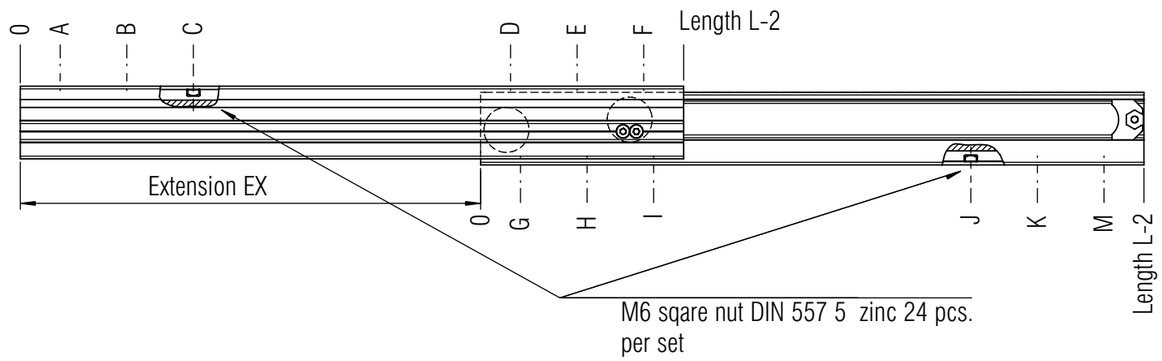

L mm	450	500	550	600	650	700	750	800	850	900	950	1000	1100	1200	1300	1400	1500	1600	1700	1800	1900	2000	2100	2200	2300	2400	2500
EX	315	350	385	420	455	490	525	560	595	630	665	700	770	840	910	980	1050	1120	1190	1260	1330	1400	1470	1540	1610	1680	1750

FR 9000

SLIDE TYPE:	**Regular-Extension Aluminium Drawer Slide**
MOUNTING:	Bottom and Side Mount

WIDTH:	**56 mm**
LOAD CAPACITY:	dynamic up to **200 kg**

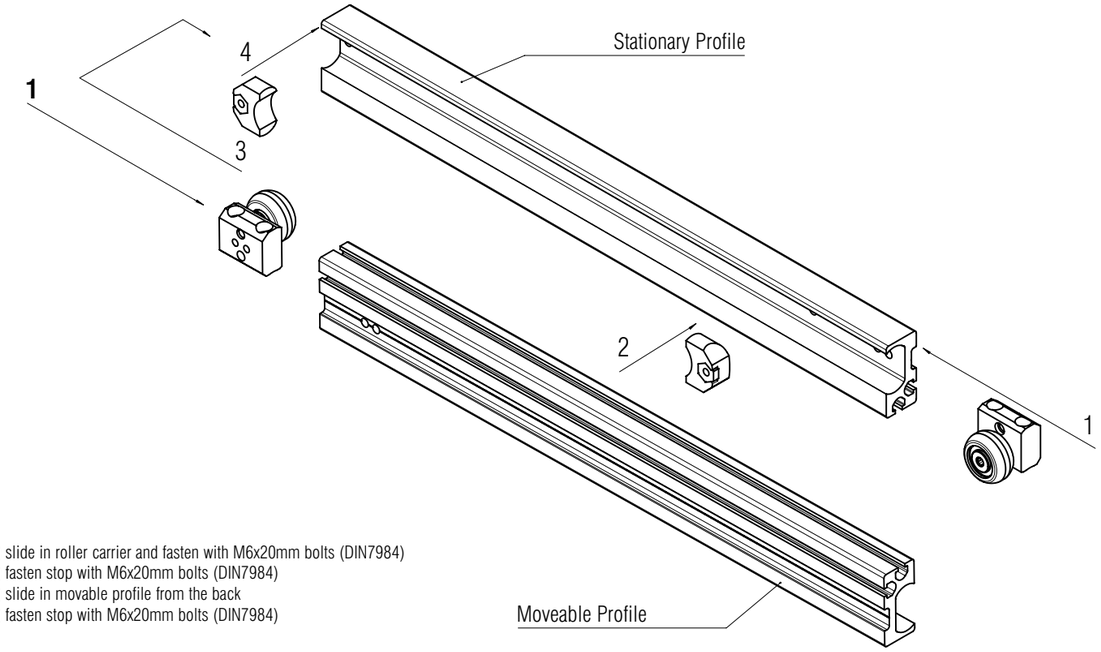

1.) slide in roller carrier and fasten with M6x20mm bolts (DIN7984)
2.) fasten stop with M6x20mm bolts (DIN7984)
3.) slide in movable profile from the back
4.) fasten stop with M6x20mm bolts (DIN7984)

EXAMPLE FR9000 REGULAR EXTENSION:

- 2 outer profiles with 4 stops and 2 roller carriers
- 2 inner profiles with 2 roller carriers
- all profiles have the same length, extension to one side

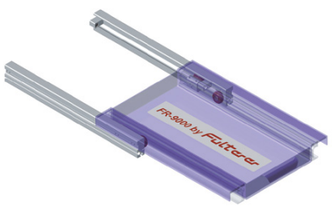

EXAMPLE FR9000 REGULAR EXTENSION:

- 2 outer profiles with 4 stops
- 2 inner profiles with 4 roller carriers
- different lengths of profiles, extension to both sides

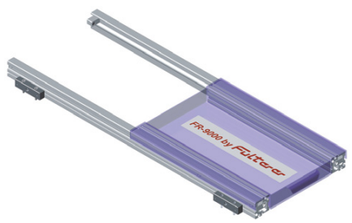

EXAMPLE FR9000 TABLE EXTENSION:

- 2 outer profiles with 6 stops
- table top with roller carriers arranged in pairs

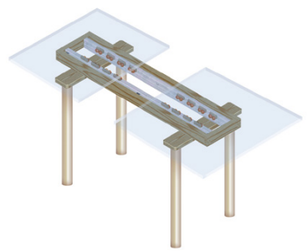

Individual components for Fabricators:		**Order No.**
Extruded Profile	Length 6140 mm	▸ **9201**
rollers and stops/Regular Extension	2 pcs. solid rollers (tolerance compensating), 2 pcs. ballbearing rollers, 4 pcs. stops, 16 pcs. M6x20mm bolts (DIN7984), 24 pcs. M6 square nuts (DIN557), Packing: 1 box	▸ **9200**
Minimum order quantity, pricing and lead time on request		▸ **prompt delivery**

Assembled Regular Extension Slide:	**Length** mm	**EX** mm	**Weight**	**Order No.**
FR 9000. 1600 mm	1600	1120	*	*
FR 9000. 1900 mm	1900	1330	*	*
FR 9000. 2300 mm	2300	1610	*	*
Minimum order quantity, pricing and lead time on request				*** on request**

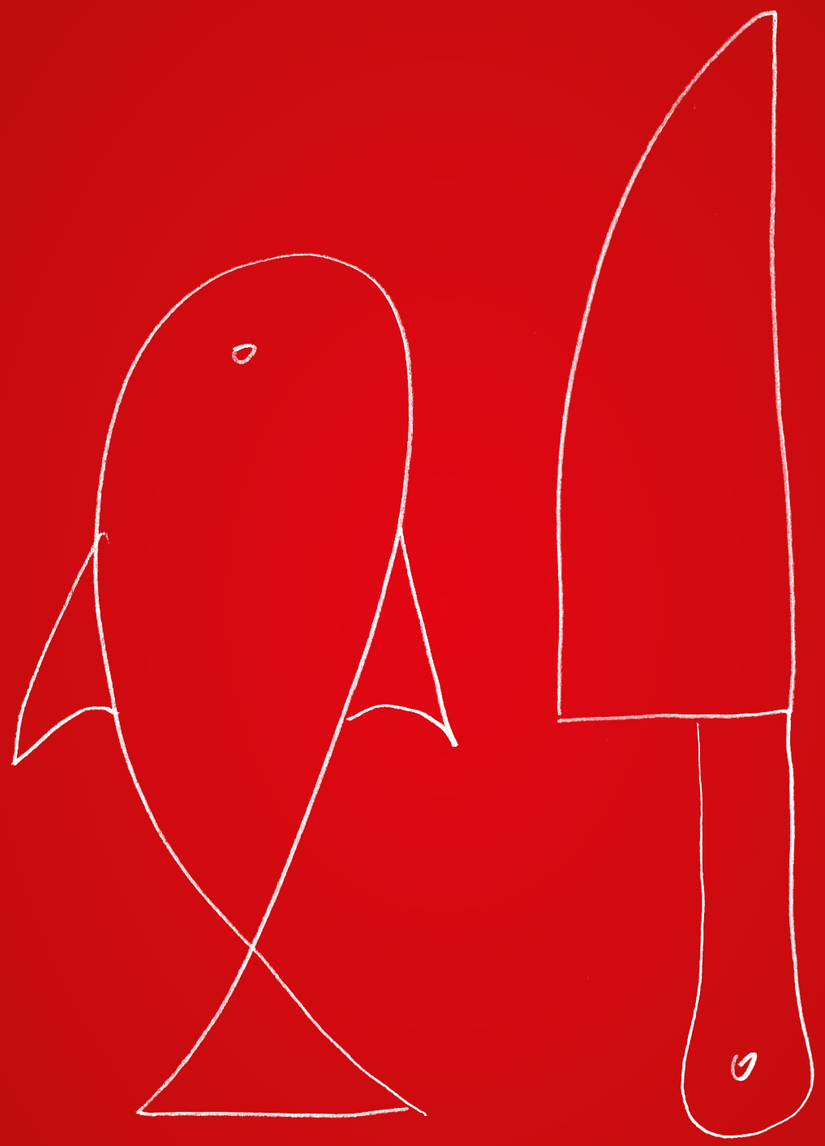

Chrome steel drawer slides.

Fulterer drawer slide systems made of **stainless steel** are used in many areas of everyday life, from **catering equipment** and **refrigerated medical cabinets**, through to **vehicle construction.** They are corrosion-resistant, durable and maintenance-friendly. The starting material is stainless steel, quality 1.4509, with rounded edges; for the roller cages we use stainless steel, quality 1.4034.

All stainless steel drawer slides are **NSF-tested** and meet the highest public health and safety standards. The NSF (National Sanitation Foundation) is an internationally recognised institution for the development of and compliance with hygiene standards in the food-processing industry. The NSF-quality certificate is issued following inspection and the appropriate fulfilment of all NSF requirements.

Our latest development, the **retrofittable ECD** (Easy Close Device) carries out the closing process of its own accord and without slamming, and is also available on request for our stainless steel drawer slides.

TYPE	MODEL	MOUNT	WIDTH	CAPACITY	PAGE
	STAINLESS STEEL DRAWER SLIDES				**54**
Regular-Extension	**FR 1051 SCC**	Side Mount	15 mm	40 kg	**56**
	FR 1052 SCC	Side Mount	18 mm	50 kg	**57**
	FR 1052 SCC-SC	Side Mount	18 mm	50 kg	**58**
	FR 2051 SCC	Bottom Mount	15 mm	40/50 kg	**59**
	FR 505 SCC	Bottom Mount	15 mm	100 kg	**60**
Full-Ext. Telescopic-Action	**FR 6010 SCC**	Side Mount	15 mm	50 kg	**61**
Full-Ext. Progressive-Action	**FR 785 SCC**	Side Mount	18 mm	60/48 kg	**62**
	FR 785 SCC-SC	Side Mount	18 mm	60/48 kg	**63**
	FR 786 SCC ECD	Bottom Mount	18 mm	60/48 kg	**64**
	FR 790 SCC	Side Mount	18 mm	68/53 kg	**65**
	FR 790 SCC-SC	Side Mount	18 mm	68/53 kg	**66**
	FR 791 SCC	Bottom Mount	18 mm	68/53 kg	**67**
	FR 7100 SCC	Bottom Mount	24 mm	120/105 kg	**68**
	FR 7101 SCC	Side Mount	24 mm	120/105 kg	**69**
	FR 7180 SCC-F	Side & Surface Mount	445 / 525 mm	150 kg	**70**
Locking system	**FR 712 CNS**				**72**

FR 1051 SCC

SLIDE TYPE:	**Regular-Extension Drawer Slide**	**WIDTH:**	**15 mm**
MOUNTING:	Side Mount	**LOAD CAPACITY:**	dynamic up to **40 kg**

MATERIAL:	stainless steel 1.4509 (SCC)
FEATURES:	delrin*- encased chrome steel ball bearings

SPECIFICATIONS:

- cabinet and drawer profile with screw holes
- lateral stability provided by specially shaped profiles
- single-sided captive profile (right)
- rear backstop
- self closing

ⓘ compatible with full-extension drawer slide FR 6010 SCC

ⓘ on request, also available in a heat-resistant version for –40 to +210 °C

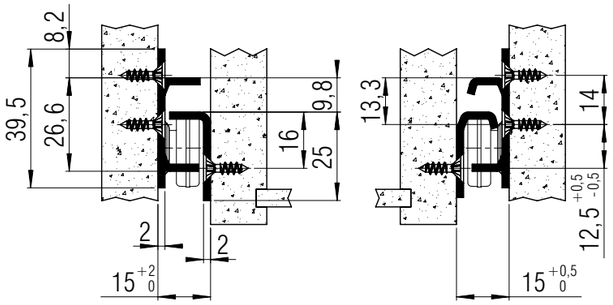

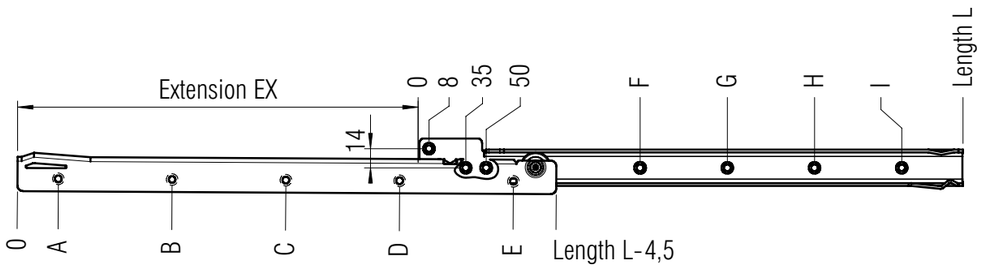

screw holes for 3,5 mm spax screws

L mm	EX mm	A mm	B mm	C mm	D mm	E mm	F mm	G mm	H mm	I mm	Weight per pair (kg)	Order No.
400	294	28	156	348			163	355			1,00	▸ **1078**
450	344	28	156	348			163	355			1,12	▸ **1079**
500	394	28	156	348	444		163	355	451		1,24	▸ **1080**
550	424	28	156	348	476		163	355	483		1,36	▸ **1081**
600	474	28	156	348	540		195	355	547		1,48	▸ **1082**
650	524	28	156	348	540		163	355	547		1,60	▸ **1083**
700	574	28	156	380	540	664	163	355	547	643	*	*
750	624	28	156	348	572	714	163	355	547	643	*	*

Packing Unit: **10 sets per box** ▸ **prompt delivery** * **on request**

FR 1052 SCC

SLIDE TYPE:	**Regular-Extension Drawer Slide**	**WIDTH:**	**18 mm**
MOUNTING:	Side Mount	**LOAD CAPACITY:**	dynamic up to **50 kg**

MATERIAL:	stainless steel 1.4509 (SCC)
FEATURES:	silent rollers

SPECIFICATIONS:

- cabinet and drawer profile with screw holes
- lateral stability provided by specially shaped profiles
- single-sided captive profile (right)
- rear backstop
- self closing

ⓘ compatible with full-extension drawer slide FR 790 SCC and FR 785 SCC

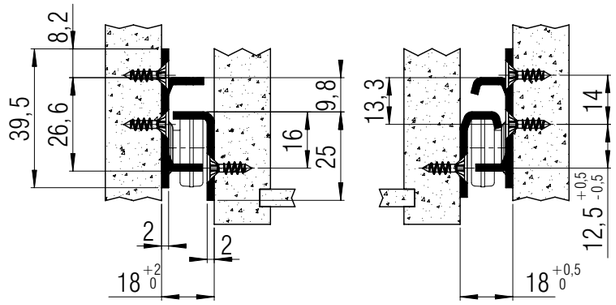

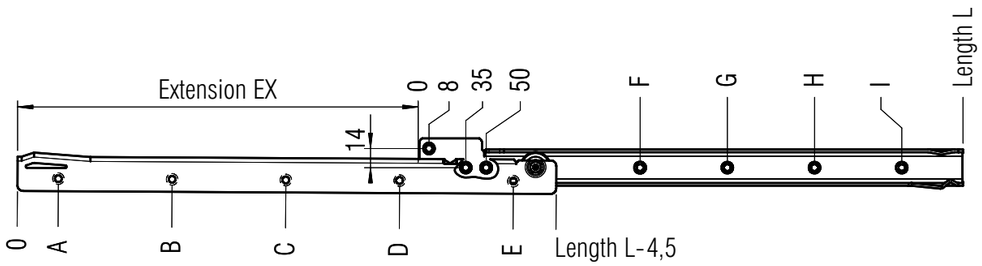

screw holes for 3,5 mm spax screws

L mm	EX mm	A mm	B mm	C mm	D mm	E mm	F mm	G mm	H mm	I mm	Weight per pair (kg)	Order No.
400	294	28	156	348			163	355			0,97	▸ **1601**
450	344	28	156	348			163	355			1,09	▸ **1602**
500	394	28	156	348	444		163	355	451		1,21	▸ **1603**
550	424	28	156	348	476		163	355	483		1,33	▸ **1604**
600	474	28	156	348	540		195	355	547		1,45	▸ **1605**
650	524	28	156	348	540		163	355	547		1,57	▸ **1606**
700	574	28	156	380	540	664	163	355	547	643	*	*
750	624	28	156	348	572	714	163	355	547	643	*	*

Packing Unit: **10 sets per box** ▸ **prompt delivery** * **on request**

FR 1052 SCC-SC

SLIDE TYPE:	**Regular-Extension Drawer Slide**	**WIDTH:**	**18 mm**
MOUNTING:	Side Mount	**LOAD CAPACITY:**	dynamic up to **50 kg**

MATERIAL:	stainless steel 1.4509 (SCC)	**FEATURES:**	silent rollers

SPECIFICATIONS & NOTES:

- cabinet profile with bayonet mounting tabs and safety nose
- drawer profile without screw holes
- lateral stability provided by specially shaped profiles
- single-sided captive profile (right)
- rear backstop
- self closing

ⓘ compatible with full-extension drawer slide FR 785 SCC-SC
ⓘ tool-less quick assembly of cabinet profile
ⓘ standard grid rail (see drawing)

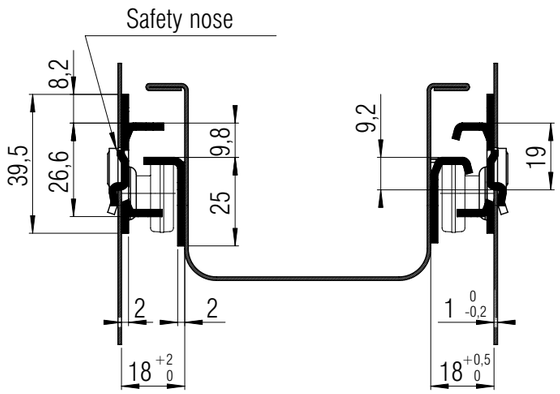

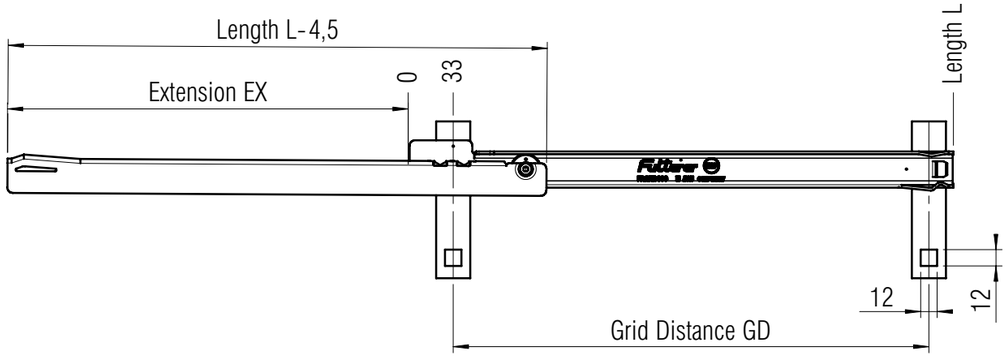

L mm	EX mm	GD mm	Weight per pair (kg)	Order No.
400	294	349	0,97	▸ **5302**
450	344	399	1,09	*
500	394	449	1,21	▸ **5304**
550	424	499	1,33	*
600	474	549	1,45	▸ **5306**
650	524	599	1,57	*
700	574	649	1,69	*
750	624	699	1,82	*

Packing Unit: **10 sets per box** ▸ **prompt delivery** * **on request**

FR 2051 SCC

SLIDE TYPE:	**Regular-Extension Drawer slide**	**WIDTH:**	**15 mm**
MOUNTING:	Bottom Mount	**LOAD CAPACITY:**	dyn. up to **40 kg** (steel ball bearings) dyn. up to **50 kg** (silent rollers)

MATERIAL:	stainless steel 1.4509 (SCC)	**FEATURES:**	delrin*- encased chrome steel ball bearings or silent rollers

SPECIFICATIONS:

- cabinet and drawer profile with screw holes
- lateral stability provided by specially shaped profiles
- single-sided captive profile (right)
- rear backstop
- self closing

ⓘ compatible with full-extension drawer slide FR 6010 SCC
ⓘ on request, also available in a heat resistant version for –40 to +210 °C

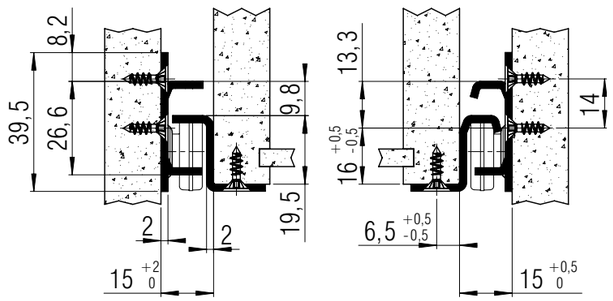

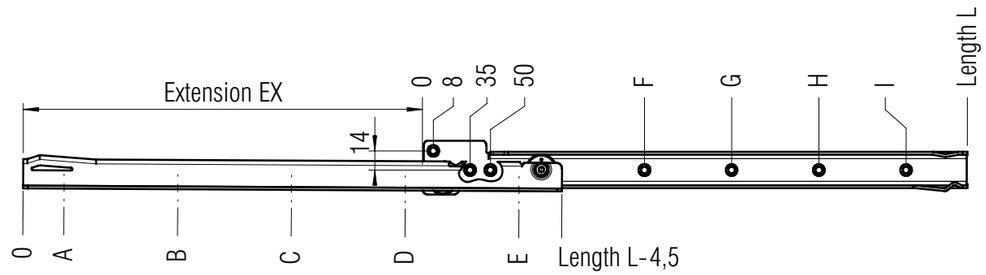

screw holes for 3,5 mm spax screws

L mm	EX mm	A mm	B mm	C mm	D mm	E mm	F mm	G mm	H mm	I mm	Weight per pair (kg)	Order No. steel ball bearings	Order No. silent rollers
400	294	28	156	348			163	355			1,13	▸ **1086**	▸ **1510**
450	344	28	156	348			163	355			1,27	▸ **1087**	▸ **1511**
500	394	28	156	348	444		163	355	451		1,41	▸ **1088**	▸ **1512**
550	424	28	156	348	476		163	355	483		1,54	▸ **1089**	▸ **1513**
600	474	28	156	348	540		195	355	547		1,68	▸ **1090**	▸ **1514**
650	524	28	156	348	540		163	355	547		1,82	▸ **1091**	▸ **1515**
700	574	28	156	380	540	664	163	355	547	643	1,95	▸ **1092**	▸ **1516**
750	624	28	156	348	572	714	163	355	547	643	2,09	▸ **1093**	▸ **1517**

Packing Unit: **10 sets per box** ▸ **prompt delivery**

FR 505 SCC

SLIDE TYPE:	**Regular-Extension Drawer Slide**
MOUNTING:	Bottom Mount

WIDTH:	**15 mm**
LOAD CAPACITY:	dynamic up to **100 kg**

MATERIAL:	stainless steel 1.4509 (SCC)

FEATURES:	chrome steel ball bearings with integrated nylon gliding ring

SPECIFICATIONS & NOTES:

- cabinet and drawer profile with screw holes
- lateral stability provided by specially shaped profiles
- self-closing
- rear backstop

ⓘ on request, also available in a heat resistant version for –40 to +210 °C.

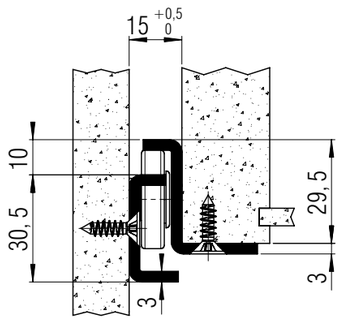

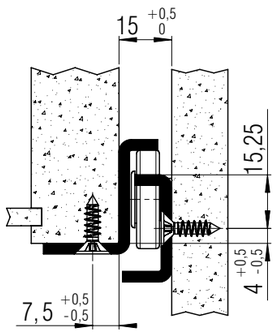

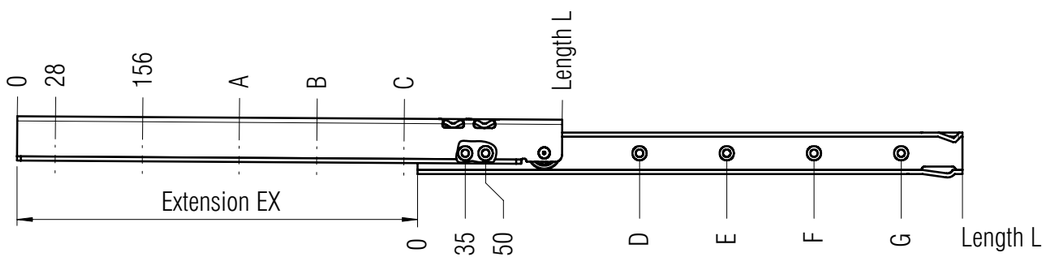

screw holes for 4,5 mm spax screws

L mm	EX mm	A mm	B mm	C mm	D mm	E mm	F mm	G mm	Weight per pair (kg)	Order No.
400	294	348			163	355			2,08	▸ **1060**
450	344	348			163	355			2,33	▸ **1061**
500	394	348	444		163	355	451		2,57	▸ **1062**
550	444	348	476		163	355	483		2,82	▸ **1063**
600	494	348	540		195	355	547		3,06	▸ **1064**
650	544	348	540		163	355	547		3,31	▸ **1065**
700	584	380	540	636	163	355	547	643	3,55	▸ **1066**
750	634	380	540	636	163	355	547	643	3,80	▸ **1067**

Packing Unit: **5 sets per box** ▸ **prompt delivery**

FR 6010 SCC

SLIDE TYPE:	**Full-Extension Drawer Slide - Telescopic-Action**
MOUNTING:	Side Mount

WIDTH:	**15 mm**
LOAD CAPACITY:	dynamic up to **50 kg** (full-ext.)

MATERIAL:	stainless steel 1.4509 (SCC)

FEATURES:	chrome steel ball bearings with integrated nylon gliding ring or solid delrin* rollers

SPECIFICATIONS & NOTES:

- cabinet and drawer profile with screw holes
- high lateral stability through specially formed middle profile
- middle profile with locking device for easy assembly
- with over-extension of at least 30 mm (standard)
- double-sided captive profile
- self-closing
- soft stop

ⓘ compatible with regular-extension drawer slides FR 1051 SCC

ⓘ on request, also available in a heat resistant version for –40 to +210 °C

*DuPont (TM) Delrin®

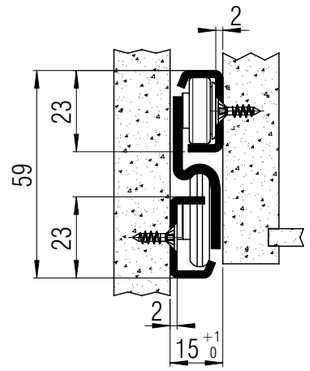

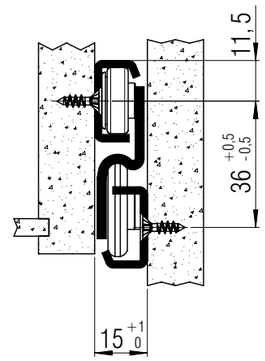

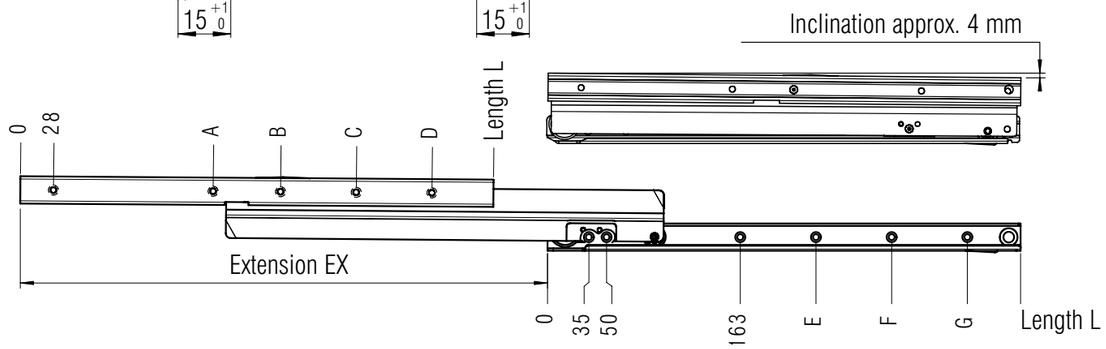

screw holes for 3,5 mm spax screws

L mm	EX mm	A mm	B mm	C mm	D mm	E mm	F mm	G mm	Weight per pair (kg)	Order No. delrin rollers	Order No. heatresistant	Order No. steel ball bearings
300	320	124	284			259			1,52	*	*	▸ **1068**
350	395	156	284			291			1,75	*	▸ **2521**	▸ **1069**
400	445	156	348			355			1,98	▸ **90214**	▸ **2522**	▸ **1070**
450	495	156	348			355			2,19	▸ **90215**	*	▸ **1071**
500	545	156	348	444		355	451		2,42	▸ **90216**	▸ **2524**	▸ **1072**
550	595	156	348	476		355	483		2,66	▸ **90217**	▸ **2525**	▸ **1073**
600	645	156	348	540		355	547		2,89	▸ **90218**	▸ **2526**	▸ **1074**
650	695	156	348	540		355	547		3,12	▸ **90219**	*	▸ **1075**
700	745	156	380	540	636	355	547	643	3,40	*	*	▸ **1076**
750	795	156	348	540	636	355	547	643	3,58	*	*	▸ **1077**

Packing Unit: **6 sets per box** ▸ **prompt delivery** * **on request**

FR 785 SCC

SLIDE TYPE:	**Progressive-Action Full-Extension Drawer Slide**
MOUNTING:	Side Mount

WIDTH:	**18 mm**
LOAD CAPACITY:	dynamic up to **60 kg** (full-ext.) dynamic up to **48 kg** (over-ext.)

ATTACHMENT:

Easy Close Device
Packing Unit:
1 set per polybag

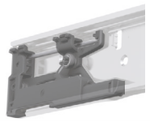

ECD 78-S
+5°C to +40°C
Order No.: ▸ **82503**

ECD 78-C
-10°C to +10°C
Order No.: ▸ **83442**

ECD 78-F
-25°C to -5°C
Order No.: ▸ **83443**

MATERIAL:	stainless steel 1.4509 (SCC)
FEATURES:	solid delrin* rollers

SPECIFICATIONS & NOTES:

- cabinet and drawer profile with screw holes
- high lateral stability through specially formed middle profile (material thickness 2 mm) and guide rollers
- ideal running characteristic and smoothness of running through integrated progressive-action
- safety clip mounted in middle profile
- double-sided captive profile
- self closing, soft stop

compatible with regular-extension drawer slide FR 1052 CS

also available with 60 mm over-extension
also available with **Easy Close Device (ECD)**
on request, also available as heat resistant model (up to 110° C) – load capacity 45 kg (full-ext.), 35 kg (over-ext.)

*DuPont (TM) Delrin®

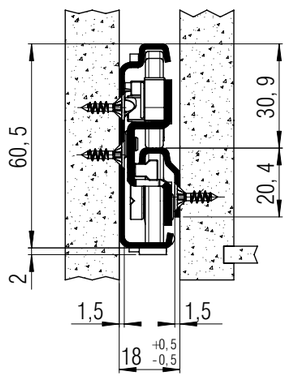

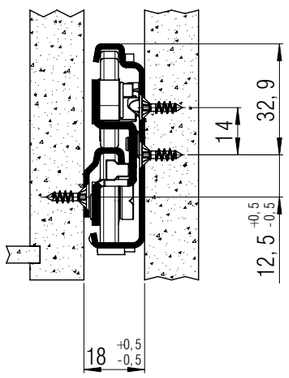

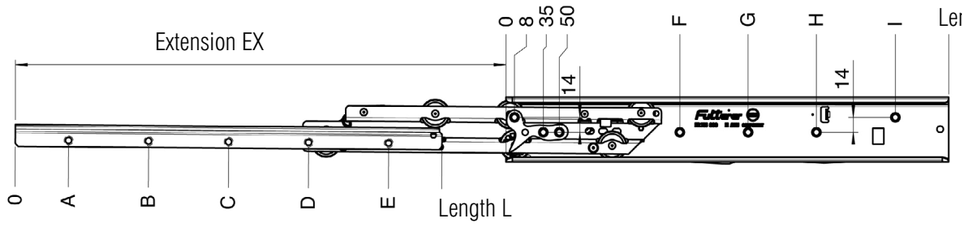

screw holes for 3,5 mm spax screws

L mm	EX full-ext.	EX over-ext.	A mm	B mm	C mm	D mm	E mm	F mm	G mm	H mm	I mm	Weight per pair (kg)	Order No. full-ext.	Order No. over-ext.
335	320	395	28	156	316			163			315	*	*	
350	335	410	28	156	316			163			315	1,57	▸ **8522**	*
385	370	445	28	156	348			163			365	*	*	*
400	385	460	28	156	380			163			365	1,80	▸ **8524**	*
435	420	495	28	156	316	412		163	355		415	*	*	*
450	435	510	28	156	316	412		163	355		415	1,99	▸ **8526**	*
485	470	545	28	156	348	444		163	355		465	*	*	*
500	485	560	28	156	348	476		163	355		465	2,23	▸ **8528**	*
535	520	595	28	156	348	508		163	355		515	*	*	*
550	535	610	28	156	348	508		163	355		515	2,47	▸ **8530**	*
585	570	645	28	156	348	540		195	355		565	*	*	*
600	585	660	28	156	348	572		195	355		565	2,72	▸ **8532**	*
635	620	695	28	156	348	604		163	355	547	615	*	*	*
650	635	710	28	156	348	604		163	355	547	615	2,96	▸ **8534**	*
685	670	745	28	156	348	540	668	163	355	547	665	*	*	*
700	685	760	28	156	348	540	668	163	355	547	665	3,20	▸ **8536**	*
735	720	795	28	156	348	572	700	163	355	547	715	*	*	*
750	735	810	28	156	348	572	732	163	355	547	715	*	*	*

Packing Unit: **5 sets per box** ▸ **prompt delivery** * **on request**

FR 785 SCC-SC

SLIDE TYPE:	**Progressive-Action Full-Extension Drawer Slide**
MOUNTING:	Side Mount

WIDTH:	**18 mm**
LOAD CAPACITY:	dynamic up to **60 kg** (full-ext.) dynamic up to **48 kg** (over-ext.)

ATTACHMENT:

Easy Close Device
Packing Unit:
1 set per polybag

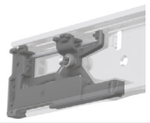

ECD 78-S
+5°C to +40°C
Order No.: ▸ **82503**

ECD 78-C
-10°C to +10°C
Order No.: ▸ **83442**

ECD 78-F
-25°C to -5°C
Order No.: ▸ **83443**

MATERIAL:	stainless steel 1.4509 (SCC)
FEATURES:	solid delrin* rollers

SPECIFICATIONS & NOTES:

- cabinet profile with bayonet mounting tabs
- drawer profile without screw holes
- high lateral stability through specially formed middle profile (material thickness 2 mm) and guide rollers
- ideal running characteristic and smoothness of running through integrated progressive-action
- safety clip mounted in middle profile
- double-sided captive profile
- self closing, soft stop

compatible with regular-extension drawer slides FR 1052 CS-SC
tool-less quick assembly of the cabinet profile
standard grid rail (see drawing)

also available with **Easy Close Device (ECD)**
on request, also available as heat resistant model (up to 110° C) – load capacity 45 kg (full-ext.), 35 kg (over-ext.)

*DuPont (TM) Delrin®

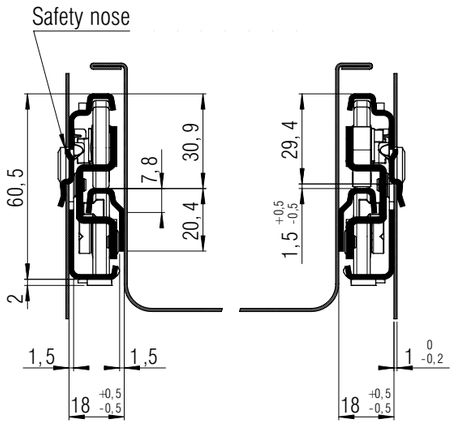

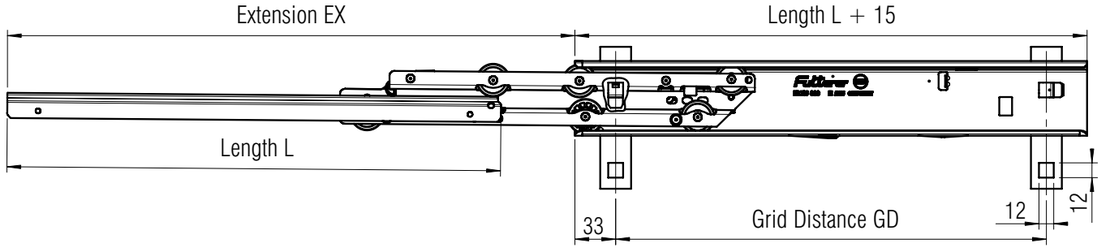

L mm	EX full-ext.	EX over-ext.	GD mm	Weight per pair (kg)	Order No. full-ext.	Order No. over-ext.
335	320	395	299	*	*	
350	335	410	299	*	*	*
385	370	445	349	*	*	*
400	385	460	349	1,74	▸ **8324**	*
435	420	495	399	*	*	*
450	435	510	399	1,98	▸ **8326**	*
485	470	545	449	*	*	*
500	485	560	449	2,22	▸ **8328**	*
535	520	595	499	*	*	*
550	535	610	499	2,46	▸ **8330**	*
585	570	645	549	*	*	*
600	585	660	549	2,70	▸ **8332**	*
635	620	695	599	*	*	*
650	635	710	599	2,94	▸ **8334**	*
685	670	745	649	*	*	*
700	685	760	649	*	*	*
735	720	795	699	*	*	*
750	735	810	699	*	*	*

Packing Unit: **5 sets per box** ▸ **prompt delivery** * **on request**

FR 786 SCC ECD

SLIDE TYPE:	**Full-Extension Drawer Slide - Progressive-Action**
MOUNTING:	Bottom Mount

WIDTH:	**18 mm**
LOAD CAPACITY:	dynamic up to **60 kg** (full-ext.) dynamic up to **48 kg** (over-ext.)

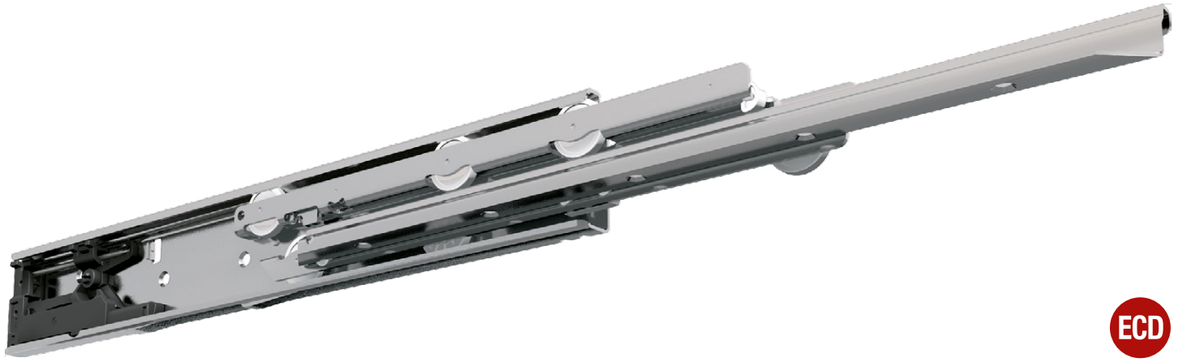

ECD

MATERIAL:	stainless steel 1.4509 (SCC)
FEATURES:	solid delrin* rollers

SPECIFICATIONS & NOTES:

- cabinet and drawer profile with screw holes
- high lateral stability through specially formed middle profile (material thickness 2 mm) and guide rollers
- ideal running characteristic and smoothness of running through integrated progressive-action
- safety clip mounted in middle profile
- double-sided captive profile
- **Easy Close Device (ECD)** integrated

ⓘ also available with 60 mm over-extension

*DuPont (TM) Delrin®

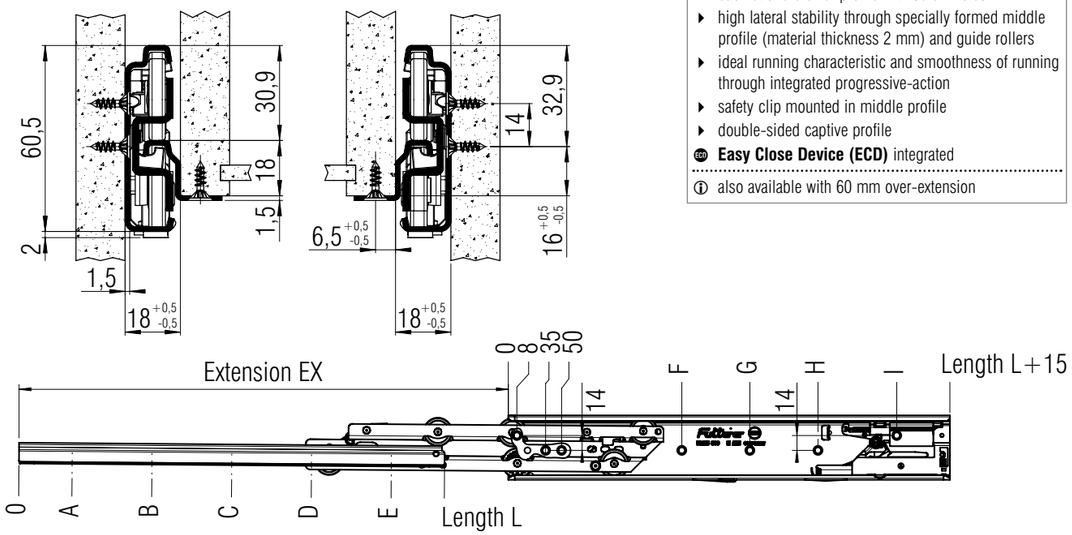

screw holes for 3,5 mm spax screws

L mm	EX full-ext.	EX over-ext.	A mm	B mm	C mm	D mm	E mm	F mm	G mm	H mm	I mm	Weight per pair (kg)	Order No. full-ext.
335	320	395	28	156	316			163			300	*	*
350	335	410	28	156	316			163			315	*	▸ **8222**
385	370	445	28	156	348			163			350	*	*
400	385	460	28	156	380			163			365	*	▸ **8224**
435	420	495	28	156	316	412		163	323		400	*	*
450	435	510	28	156	316	412		163	355		415	*	▸ **8226**
485	470	545	28	156	348	444		163	355		450	*	*
500	485	560	28	156	348	476		163	355		465	*	▸ **8228**
535	520	595	28	156	348	508		163	355		500	*	*
550	535	610	28	156	348	508		163	355		515	*	▸ **8230**
585	570	645	28	156	348	540		195	355		550	*	*
600	585	660	28	156	348	572		195	355		565	*	▸ **8232**
635	620	695	28	156	348	604		163	355	547	600	*	*
650	635	710	28	156	348	604		163	355	547	615	*	▸ **8234**
685	670	745	28	156	348	540	668	163	355	547	650	*	*
700	685	760	28	156	348	540	668	163	355	547	665	*	▸ **8236**
735	720	795	28	156	348	572	700	163	355	547	700	*	*
750	735	810	28	156	348	572	732	163	355	547	715	*	*

Packing Unit: **5 sets per box** ▸ **prompt delivery** * **on request**

FR 790 SCC

SLIDE TYPE:	**Progressive-Action Full-Extension Drawer Slide**
MOUNTING:	Side Mount

WIDTH:	**18 mm**
LOAD CAPACITY:	dynamic up to **68 kg** (full-ext.) dynamic up to **53 kg** (over-ext.)

NSF

MATERIAL:	stainless steel 1.4509 (SCC)
FEATURES:	solid delrin* rollers

SPECIFICATIONS & NOTES:

- cabinet and drawer profile with screw holes
- high lateral stability through specially formed middle profile (material thickness 2 mm) and guide rollers
- ideal running characteristic and smoothness of running through integrated progressive-action
- safety clip mounted in middle profile
- double-sided captive profile
- self closing, soft stop

ⓘ compatible with regular-extension drawer slide FR 1052 SCC

ⓘ also available with 60 mm over-extension (OE)

ⓘ also available as heat resistant model (up to 110° C) – Load Capacity 50 kg (full ext.), 40 kg (over ext. – drawer profile without screw holes)

*DuPont (TM) Delrin®

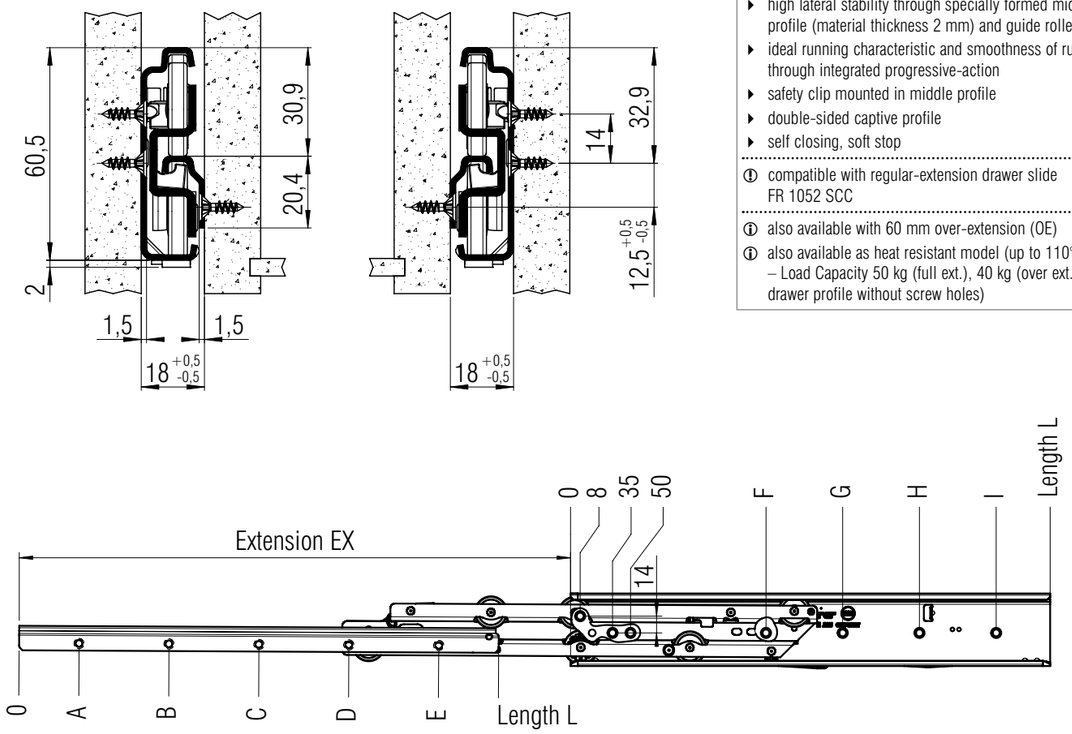

screw holes for 3,5 mm spax screws

L mm	EX full-ext.	EX over-ext.	A mm	B mm	C mm	D mm	E mm	F mm	G mm	H mm	I mm	Weight per pair (kg)	Order No. full-ext.	Order No. over-ext. (OE)	Order No. heat resistant (OE)
350	335	410	28	156	316			163	291			1,71	▸ **7900**	*	▸ **7970**
400	385	460	28	156	380			163	355			1,95	▸ **7901**	*	*
450	435	510	28	156	316	412		163	355			2,19	▸ **7902**	*	▸ **7972**
500	485	560	28	156	348	476		163	355	451		2,43	▸ **7903**	*	▸ **7973**
550	535	610	28	156	348	508		163	355	483		2,67	▸ **7904**	▸ **7924**	▸ **7974**
600	585	660	28	156	348	572		195	355	547		2,91	▸ **7905**	*	▸ **7975**
650	635	710	28	156	348	604		163	355	547		3,15	▸ **7906**	▸ **7926**	*
700	685	760	28	156	348	540	668	163	355	547	643	3,39	▸ **7907**	*	*
750	735	810	28	156	348	572	732	163	355	547	643	*	*	*	*

Packing Unit: **5 sets per box** ▸ **prompt delivery** * **on request**

FR 790 SCC-SC

SLIDE TYPE:	**Full-Extension Drawer Slide - Progressive-Action**
MOUNTING:	Side Mount

WIDTH:	**18 mm**
LOAD CAPACITY:	dynamic up to **68 kg** (full-ext.) dynamic up to **53 kg** (over-ext.)

MATERIAL:	stainless steel 1.4509 (SCC)
FEATURES:	solid delrin* rollers

SPECIFICATIONS & NOTES:

- cabinet profile with bayonet mounting tabs
- drawer profile without screw holes
- high lateral stability through specially formed middle profile (material thickness 2 mm) and guide rollers
- ideal running characteristic and smoothness of running through integrated progressive-action
- safety clip mounted in middle profile
- double-sided captive profile
- self closing, soft stop

ⓘ compatible with regular-extension drawer slide SCC-SC
ⓘ tool-less quick assembly of the cabinet profile
ⓘ standard grid rail (see drawing)

ⓘ on request, also available as heat resistant model (up to 110° C) – load capacity 50 kg (full-ext.), 40 kg (over-ext.)

*DuPont (TM) Delrin®

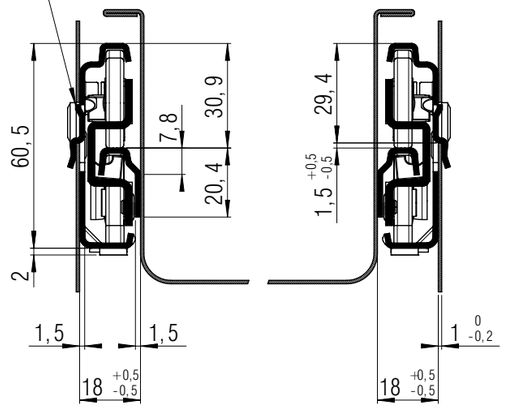

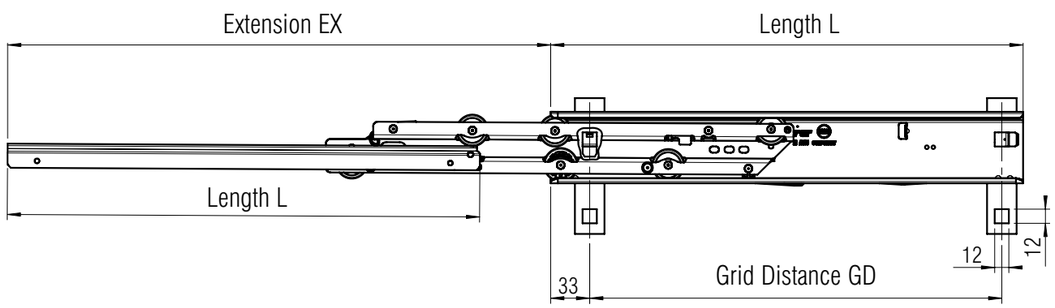

L mm	EX full-ext.	EX over-ext.	GD mm	Weight per pair (kg)	Order No. full-ext.	Order No. over-ext.
350	335	410	299	1,62	*	*
400	385	460	349	1,68	*	▸ **8021**
450	435	510	399	2,10	*	*
500	485	560	449	2,34	*	▸ **8023**
550	535	610	499	2,58	*	▸ **8024**
600	585	660	549	2,82	*	▸ **8025**
650	635	710	599	3,06	*	▸ **8026**
700	685	760	649	3,30	*	▸ **8027**
750	735	810	699	3,54	*	*

Packing Unit: **5 sets per box** ▸ **prompt delivery** * **on request**

FR 791 SCC

SLIDE TYPE:	**Full-Extension Drawer Slide - Progressive-Action**
MOUNTING:	Bottom Mount

WIDTH:	**18 mm**
LOAD CAPACITY:	dynamic up to **68 kg** (full-ext.) dynamic up to **53 kg** (over-ext.)

MATERIAL:	stainless steel 1.4509 (SCC)
FEATURES:	solid delrin* rollers

SPECIFICATIONS & NOTES:

- cabinet and drawer profile with screw holes
- high lateral stability through specially formed middle profile (material thickness 2 mm) and guide rollers
- ideal running characteristic and smoothness of running through integrated progressive-action
- safety clip mounted in middle profile
- double-sided captive profile
- self closing, soft stop

ⓘ also available with 60 mm over-extension
ⓘ on request, also available as heat resistant model (up to 110° C) – load capacity 45 kg (full-ext.), 35 kg (over-ext.)

*DuPont (TM) Delrin®

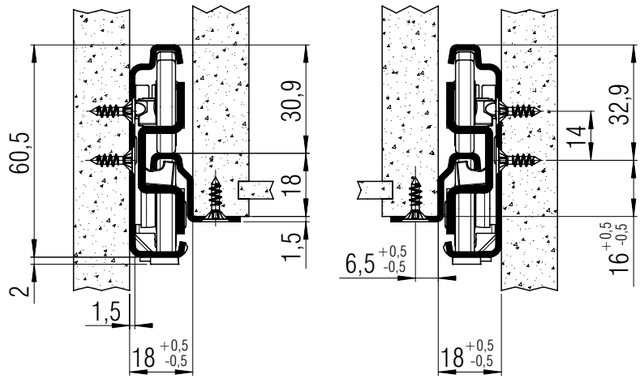

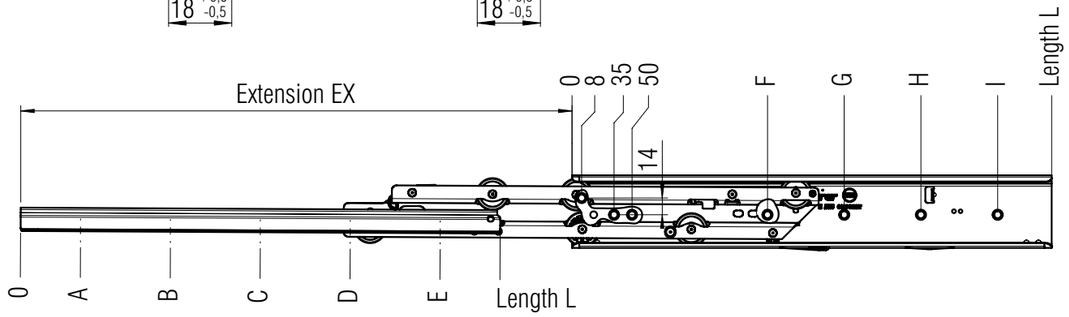

screw holes for 3,5 mm spax screws

L mm	EX full-ext.	EX over-ext.	A mm	B mm	C mm	D mm	E mm	F mm	G mm	H mm	I mm	Weight per pair (kg)	Order No. full-ext.	Order No. over-ext.
350	335	410	28	156	316			163	291			*	*	*
400	385	460	28	156	380			163	355			2,06	▸ **7941**	*
450	435	510	28	156	316	412		163	355			2,31	▸ **7942**	*
500	485	560	28	156	348	476		163	355	451		2,56	▸ **7943**	*
550	535	610	28	156	348	508		163	355	483		2,82	▸ **7944**	▸ **81413**
600	585	660	28	156	348	572		195	355	547		3,07	▸ **7945**	*
650	635	710	28	156	348	604		163	355	547		3,33	▸ **7946**	*
700	685	760	28	156	348	540	668	163	355	547	643	3,58	▸ **7947**	*
750	735	810	28	156	348	572	732	163	355	547	643	*	*	*

Packing Unit: **5 sets per box** ▸ **prompt delivery** * **on request**

FR 7100 SCC

SLIDE TYPE:	**Full-Extension Drawer Slide - Progressive-Action**
MOUNTING:	Bottom Mount

WIDTH:	**24 mm**
LOAD CAPACITY:	dynamic up to **120 kg** (full-ext.) dynamic up to **105 kg** (over-ext.)

MATERIAL:	stainless steel 1.4509 (SCC)
FEATURES:	solid delrin* rollers

SPECIFICATIONS & NOTES:

- cabinet profile with holes and drawer profile without holes for welding
- high lateral stability through specially formed middle profile and guide rollers
- ideal running characteristic and smoothness of running through integrated progressive-action
- safety clip mounted in middle profile
- double-sided captive profile
- self closing, soft stop

ⓘ also available with 60 mm over-extension
ⓘ on request, also available as heat resistant model (up to 110° C) – load capacity 90 kg (full-ext.), 80 kg (over-ext.)

*DuPont (TM) Delrin®

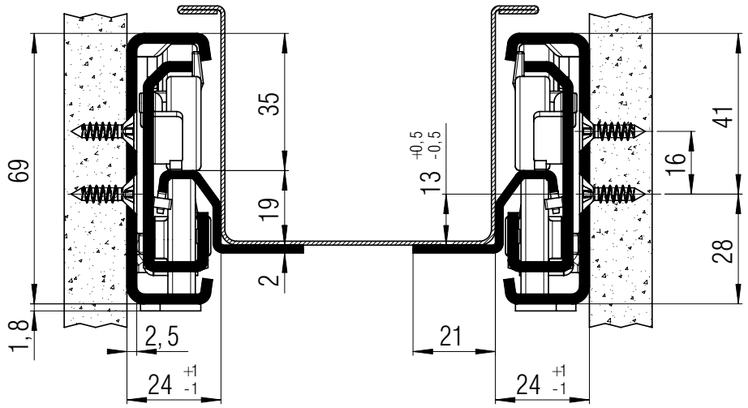

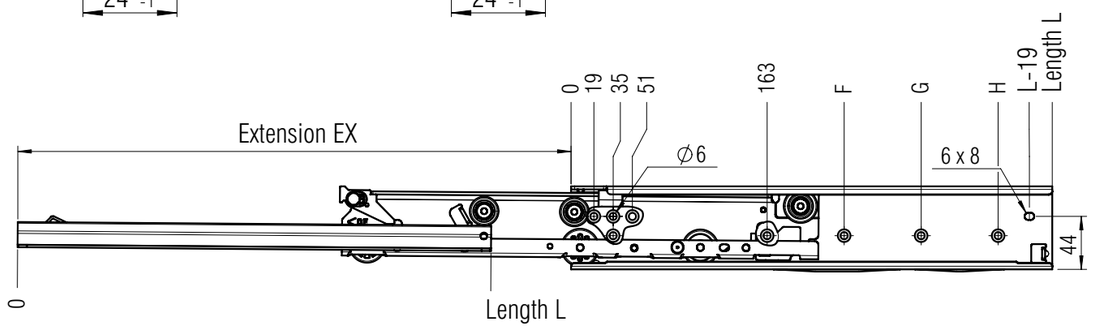

screw holes for 4,5 mm spax screws

L mm	EX full-ext.	EX over-ext.	F mm	G mm	H mm	Weight per pair (kg)	Order No. full-ext. (FE)	Order No. heat resistant (FE)
400	385	460	323			3,64	▸ **7130**	▸ **7140**
450	435	510	355			4,11	▸ **7131**	*
500	485	560	291	451		4,57	▸ **7132**	▸ **7142**
550	535	610	323	483		5,04	▸ **7133**	▸ **7143**
600	585	660	355	547		5,50	▸ **7134**	▸ **7144**
650	635	710	355	611		5,97	▸ **7135**	▸ **7145**
700	685	760	355	515	643	6,43	▸ **7136**	*
750	735	810	355	547	675	6,90	▸ **7137**	*

Packing Unit: **400-600 mm: 4 sets per box; 650-750 mm: 2 sets per box** ▸ **prompt delivery** * **minimum order quantity and lead time on request!**

FR 7101 SCC

SLIDE TYPE:	**Full-Extension Drawer Slide - Progressive-Action**
MOUNTING:	Side Mount

WIDTH:	**24 mm**
LOAD CAPACITY:	dynamic up to **120 kg** (full-ext.) dynamic up to **105 kg** (over-ext.)

MATERIAL:	stainless steel 1.4509 (SCC)
FEATURES:	solid delrin* rollers

SPECIFICATIONS & NOTES:

- cabinet profile with holes for welding and drawer profile without holes for welding
- high lateral stability through specially formed middle profile and guide rollers
- ideal running characteristic and smoothness of running through integrated progressive-action
- safety clip mounted in middle profile
- double-sided captive profile
- self closing, soft stop

ⓘ also available with 60 mm over-extension
ⓘ on request, also available as heat resistant model (up to 110° C) – load capacity 90 kg (full-ext.), 80 kg (over-ext.)

*DuPont (TM) Delrin®

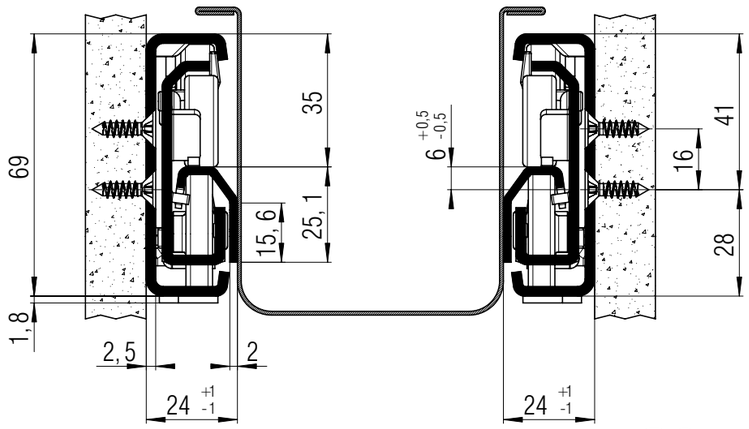

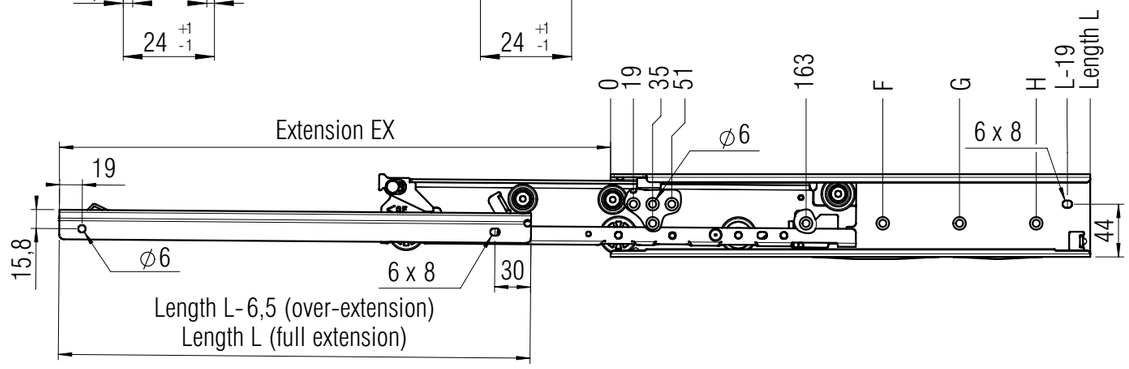

screw holes for 4,5 mm spax screws

L mm	EX full-ext.	EX over-ext.	F mm	G mm	H mm	Weight per pair (kg)	Order No. full-ext.	Order No. over-ext.
400	385	460	323			3,44	▸ **7110**	*
450	435	510	355			3,88	▸ **7111**	*
500	485	560	291	451		4,32	▸ **7112**	▸ **7122**
550	535	610	323	483		4,76	▸ **7113**	▸ **7123**
600	585	660	355	547		5,20	▸ **7114**	▸ **7124**
650	635	710	355	611		5,64	▸ **7115**	*
700	685	760	355	515	643	6,08	▸ **7116**	*
750	735	810	355	547	675	6,52	▸ **7117**	*

Packing Unit: **400-600 mm: 4 sets per box; 650-750 mm: 2 sets per box** ▸ **prompt delivery** * **minimum order quantity and lead time on request!**

FR 7180 SCC-F

SLIDE TYPE:	**Beverage / Bottle Drawer**
MOUNTING:	side and surface mounting

WIDTH:	**445 / 525 mm**
LOAD CAPACITY:	dynamic up to **150 kg**

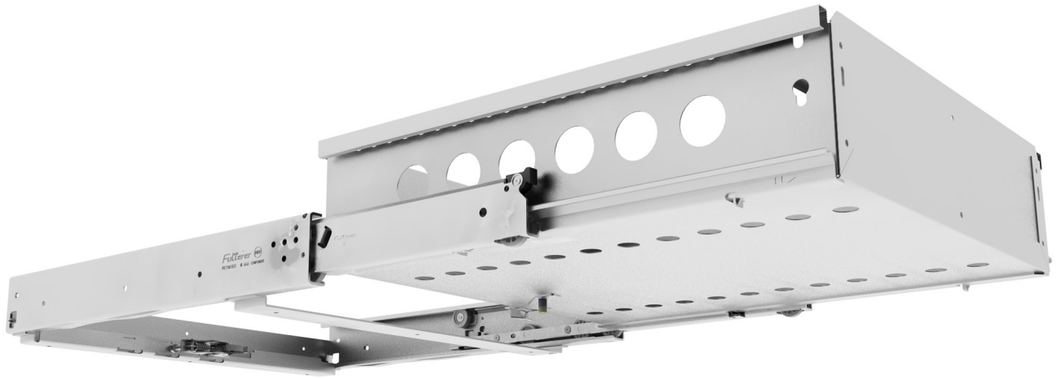

MATERIAL:	drawer stainless steel (1.4301), slide stainless steel (1.4509)

FEATURES:	solid delrin* rollers

SPECIFICATIONS & NOTES:

DRAWER

- Beverage / Bottle Drawer for extreme loads
- stainless design of drawer and accessories
- easy-care design and material
- easy faceplate adjustment
- integrated locking mechanism

DRAWER SLIDE

- cabinet profile with holes
- cross connections with connection boreholes
- high lateral stability through specially formed middle profile and guide rollers
- ideal running characteristics and smooth running
- lift out prevention clip mounted in middle profile
- smooth gliding thanks to guides on both sides

*DuPont (TM) Delrin®

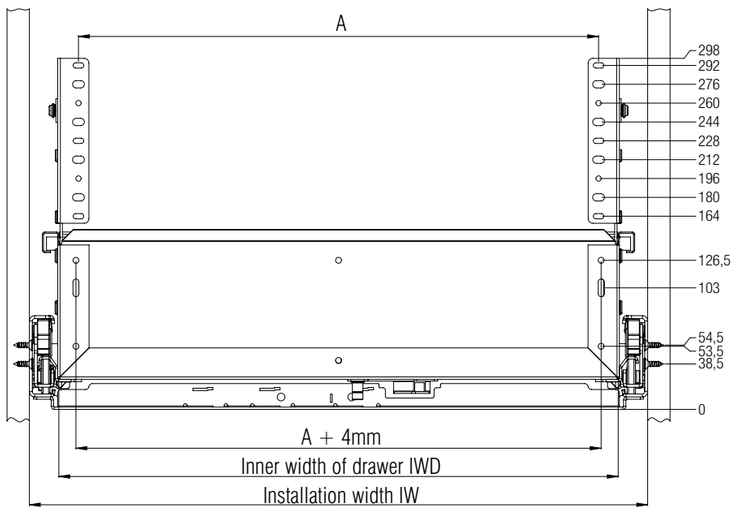

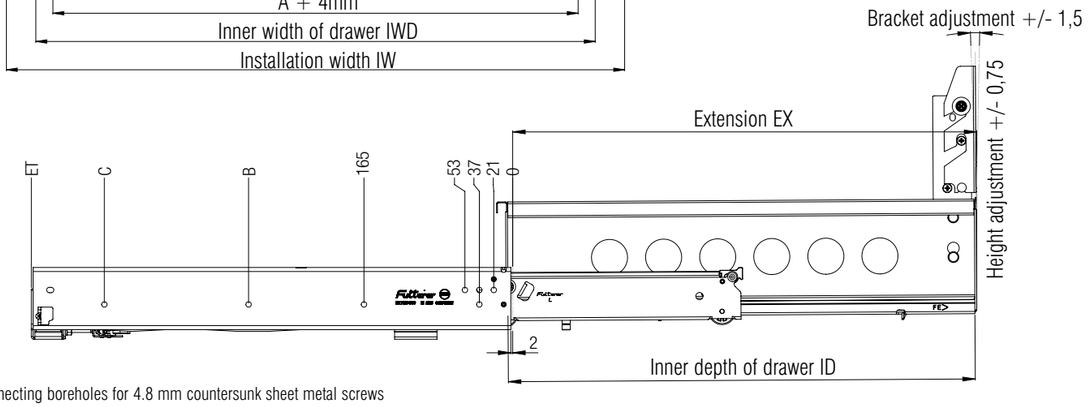

Connecting boreholes for 4.8 mm countersunk sheet metal screws

IW mm	IWD mm	ID mm	EX mm	ET mm	A mm	B mm	C mm
445	395	438	435	454	362	357	
445	395	518	515	534	362	293	453
445	395	598	595	614	362	357	549
525	475	438	435	454	442	357	
525	475	518	515	534	442	293	453
525	475	598	595	614	442	357	549

FR 7180 SCC-F

SLIDE TYPE:	**Beverage / Bottle Drawer**
MOUNTING:	side and surface mounting

WIDTH:	**445 / 525 mm**
LOAD CAPACITY:	dynamic up to **150 kg**

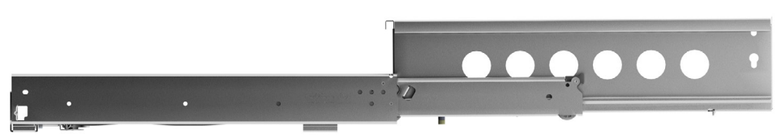

BEVERAGE / BOTTLE DRAWER	Width mm	Length mm	Weight kg	Order No.
	445	454	10,41	▸ **9004**
	445	534	11,78	▸ **9005**
	445	614	12,94	▸ **9006**
	525	454	11,19	▸ **9024**
	525	534	12,61	▸ **9025**
	525	614	13,94	▸ **9026**
Packing Unit: **1 set per box**				▸ **prompt delivery**

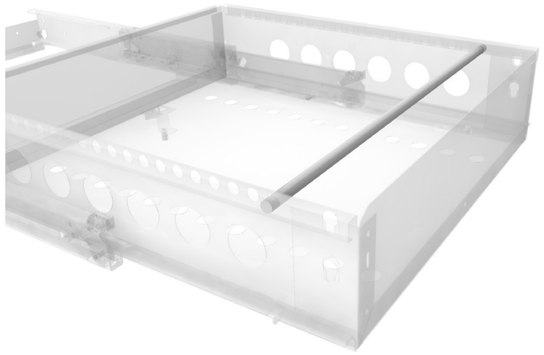

DIVIDER	Width mm	Divider length mm	Weight kg	Order No.
	445	416	0,09	▸ **9013**
	525	496	0,10	▸ **9033**
Packing Unit: **1 piece**				▸ **prompt delivery**

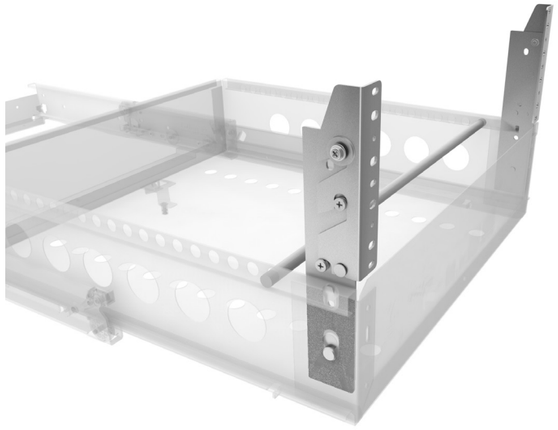

FRONT BRACKET	Height mm	Weight kg	Order No.
	298	0,63	▸ **9014**
Packing Unit: **1 pair per box**			▸ **prompt delivery**

FR 712 CNS

LOCKING SYSTEM	stainless locking catch to hold drawer shut	MATERIAL:	stainless steel

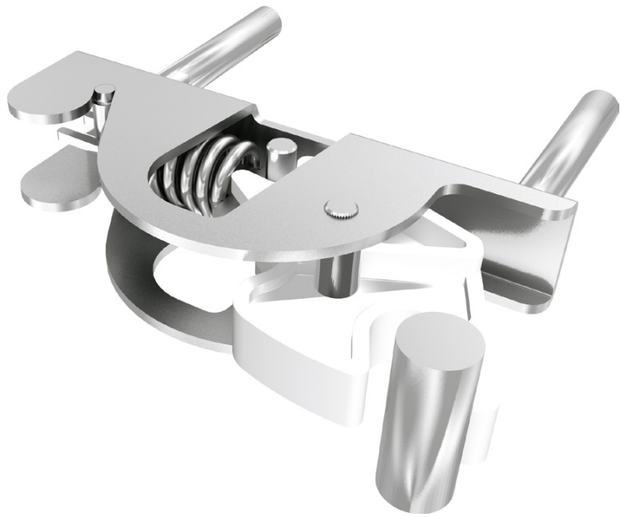

SPECIFCATIONS:

- A positive locking device with a compression spring

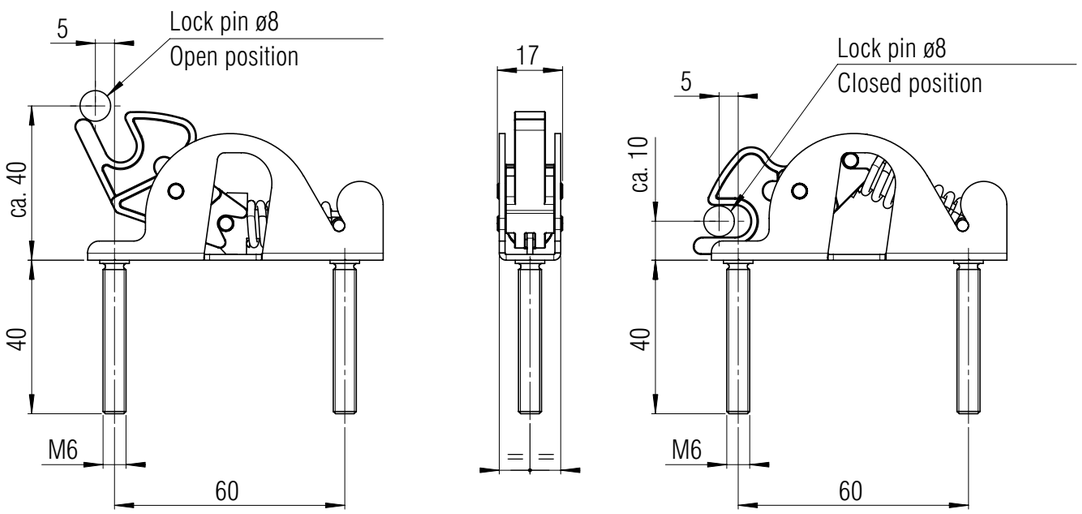

Type	Order No.
Locking System	▸ **6100067**
Packing Unit: **1 piece**	▸ **prompt delivery**

Terms and conditions of sale and delivery.

A. Validity

1. These General Terms & Conditions of Business shall apply exclusively. Any deviating or contradictory conditions are not recognized unless Fulterer AG & Co KG (hereinafter: FULTERER) expressly accepts them in writing.
2. These General Terms & Conditions of Business shall also apply to all future transactions between the parties.

B. Offers, cost estimates and feasibility studies

1. Offers submitted by FULTERER are non-binding, unless they are expressly designated as binding. The PURCHASER's order shall only be considered accepted upon confirmation of the order, at which point a contract is concluded.
2. Unless something different is agreed, order modifications or additional orders may be invoiced at appropriate prices.
3. Although FULTERER draws up cost estimates and feasibility studies to the best of its expert knowledge, it cannot assume any liability for their correctness. Should cost increases of more than 15% result after the placement of the order, FULTERER shall immediately inform the client of this fact. If unavoidable cost increases of less than 15% occur, no separate notification is necessary and these costs may be invoiced without further ado.
4. FULTERER retains ownership, copy- and usage rights to all feasibility studies that it creates as well as to drawings, images, calculations, prospectuses, catalogs, models, tools or other documents and resources which it provides to the PURCHASER. Without FULTERER'S express permission, the PURCHASER may not make these items available to third parties either in whole or in part, disclose them, use them either directly or via third parties or duplicate them. It must return these items in their entirety at FULTERER'S request and destroy any copies made if these are no longer required by regular business operations or if the negotiations do not lead to the conclusion of a contract.
5. Cost estimates and feasibility studies are free of charge.

C. Confidentiality

1. The PURCHASER is obliged to maintain the confidentiality of all operating and business secrets and calculations bases and production processes made accessible, provided or otherwise disclosed to it by FULTERER in the context of the business relationship or contact and may not make them accessible to third parties in any manner without the authorization of FULTERER.
2. The confidentiality obligation shall continue to apply for 5 (five) years following the end of the business relationship.

D. Prices, payment

1. Prices are „ex works" (INCOTERMS 2010) plus applicable VAT; they do not include transport and packaging. Partial invoices are permissible for partial deliveries.
2. The purchase price is due for payment within 30 days of invoicing. Legal default interest shall be applied after the due date.
3. In the event of default on payment, FULTERER shall be entitled to invoice to the PURCHASER all reasonable expenses arising from the latter's failure to fulfill its payment obligations, in particular any dunning and collection/attorney costs.
4. Any received payments shall first be offset against expenses and default interest.

E. Offsetting, retention

The PURCHASER shall only be entitled to offset claims if the counterclaims in question are undisputed or have been legally enforced. The PURCHASER shall only be entitled to a right of retention for counterclaims from the same contractual relationship.

F. Delivery, delivery delays

1. Delivery is conditional upon the prompt and proper completion of the agreed payment and cooperation obligations of the PURCHASER. Claims for failure to fulfill the agreement remain reserved.
2. The PURCHASER is obliged to accept the deliveries made available by FULTERER. The delivered goods are considered accepted upon delivery (ex works). Deliveries may always be subdivided. Partial acceptances are permitted for partial deliveries.
3. Excess or under-deliveries are permitted with variations up to 5(five)% – for special products with the acquisition of special materials up to 10 (ten)%; in such a case the purchase price shall be adjusted to correspond to the actual delivery quantity in aliquot parts.
4. In the event of a delay in acceptance or other culpable breach of cooperation obligations on the part of the PURCHASER, FULTERER shall be entitled to receive compensation for resulting damages including any additional costs. In such a case, the risk of the accidental loss or accidental degradation of the goods shall transfer to the PURCHASER at the time of the delay in acceptance or other breach of cooperation obligations.
5. Delivery periods or delivery deadlines shall only be binding if they were specifically agreed as binding in this case by the client and FULTERER . In all other cases they shall be non-binding. A withdrawal from the contract by the PURCHASER due to a delay in delivery shall only be permitted subject to a suitable – at least four-week – subsequent period. Such a withdrawal must be made by means of a registered letter. The right of withdrawal involves only the portion of the delivery which is in default.

G. Place of fulfillment, assumption of risk, delay of acceptance

1. The place of fulfillment for the delivery and payment of the purchase price is 6890 Lustenau.
2. The risk of the accidental loss or accidental degradation of the good shall transfer to the PURCHASER upon acceptance (Point F. 2.), or in the event of the shipment of the good at the PURCHASER's request at the time of dispatch.
3. Goods which are not accepted on the agreed date shall be stored for a period of 6 (six) weeks at the PURCHASER's risk and expense, for which FULTERER shall invoice a net storage fee of EUR 10.00 per partial calendar day and pallet space. FULTERER shall also be entitled to insist on fulfillment of the contract or to withdraw from the contract and otherwise dispose of the good after establishing a suitable additional period.

H. Retention of ownership

1. Until full receipt of all payments, the good shall remain the property of FULTERER. In the event of a breach of contract by the PURCHASER, including default of payment, FULTERER shall be entitled to reclaim and/or recover the goods.
2. The PURCHASER must handle the goods with proper care, sufficiently insure it and if necessary maintain it.
3. If the purchase price is not fully paid, the PURCHASER must immediately inform FULTERER in writing of this fact if the item is burdened with third party rights or subject to other claims by third parties.
4. The PURCHASER is entitled to sell goods delivered subject to retention of title onwards in the course of regular business. In such a case, however, it it immediately cedes all claims from any such onward sale to FULTERER, regardless of whether such a sale takes place before after any subsequent processing of the good delivered subject to retention of title. These claims following onward sale include claims against any bank which provides or confirms a letter of credit for the PURCHASER in the context of the onward sale. The cession is hereby accepted by FULTERER.

I. Warranty, guarantee

1. The warranty period is 6 (six) months.
2. The presence of defects must be demonstrated by the PURCHASER and claimed in detail and in writing, at the latest 14 days after delivery.
3. FULTERER is entitled, in the case of a warranty, to determine the type of warranty (remediation, exchange, price reduction or modification) at its discretion.
4. A guarantee of properties of the purchase object or sections thereof shall only be considered provided it is expressly agreed in writing before the conclusion of the contract.
5. Sect. 933b Austrian Civil Code (ABGB) shall not apply.

J. Liability

1. FULTERER shall be liable for willful intent or gross negligence; if no willful breach of contract exists, liability for damages shall be limited according to the order amount (order value). FULTERER shall not be liable for indirect damages, lost profits, lost interest, foregone savings, subsequent and financial damages or damages from third party claims.
2. Liability for willful damage to life, body or health and liability under product liability laws shall not be affected by the aforementioned limitations.
3. Liability is excluded unless explicitly stated otherwise above.

K. Final provisions, applicable law, jurisdiction

1. The parties wave the right to dispute the contract due to errors, reduction by more than half or disappearance of the basis of the contract or to submit claims on this basis or to demand a reduction in price or amendment of the contract on this basis.
2. Should any provision of this contract be or become invalid, this shall not affect the validity of the remaining provisions. In such cases the parties are obliged to replace the invalid provision by one which most closely approximates its economic intent.
3. Amendments to the contract must be in writing; this shall also apply to any waiver of the requirement of the written form.
4. The use of subcontractors is permitted in any case.
5. This contract is subject to the laws of the Republic of Austria. The provisions of the UN-CISG shall apply subsidiarily to these General Terms & Conditions of Business, the Austrian Company Code (UGB) and the ABGB.
6. The place of jurisdiction for all disputes arising from or relating to this contract is 6890 Lustenau, Austria.

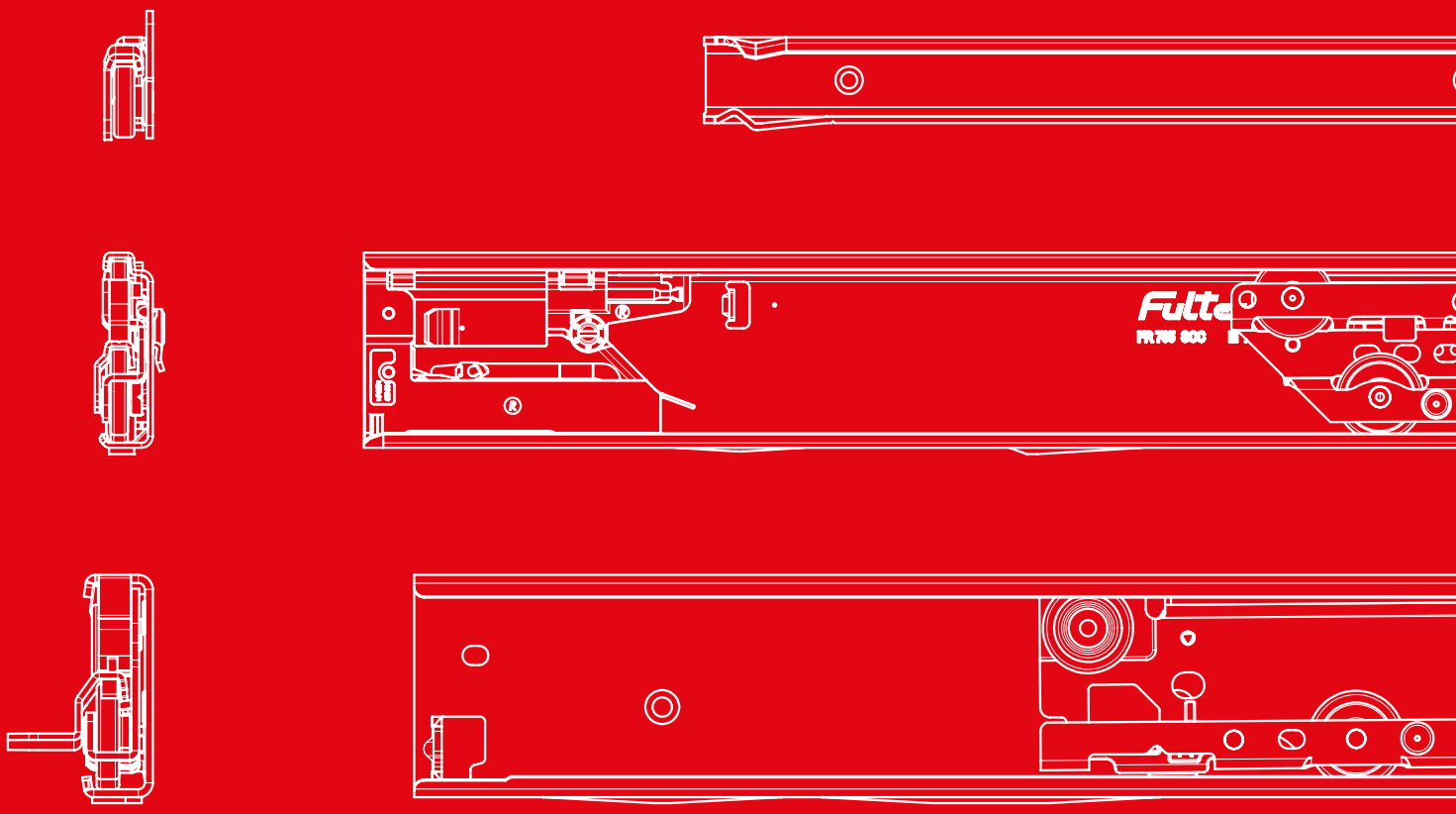

publique 09_2017: 17001_2_8

Fulterer®

FULTERER AG & CO KG
Höchsterstrasse 11
Postfach 67
6890 Lustenau, AUSTRIA

T +43 5577 8130
F +43 5577 8130 - 129
info@fulterer.com
www.fulterer.com

FULTERER USA INC.
542 Townsend Avenue
High Point
NC 27263-4552, USA

T +1 336 431 - 4646
F +1 336 431 - 4620
info@fultererusa.com
www.fultererusa.com

FULTERER AG
Industriestrasse 35
9430 St. Margrethen,
Switzerland

T +41 71 74761 - 61
F +41 71 74762 - 29
info@fulterer.com
www.fulterer.com