drawn on the left (mirrored on the right)

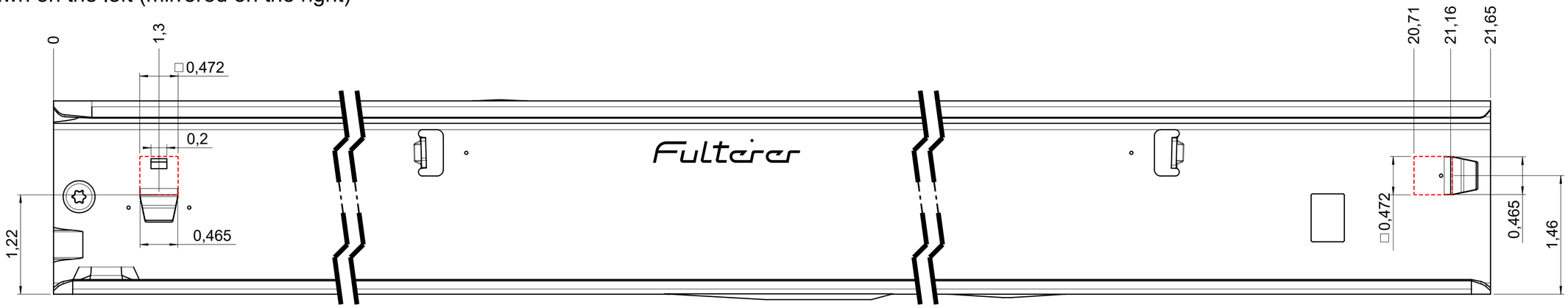

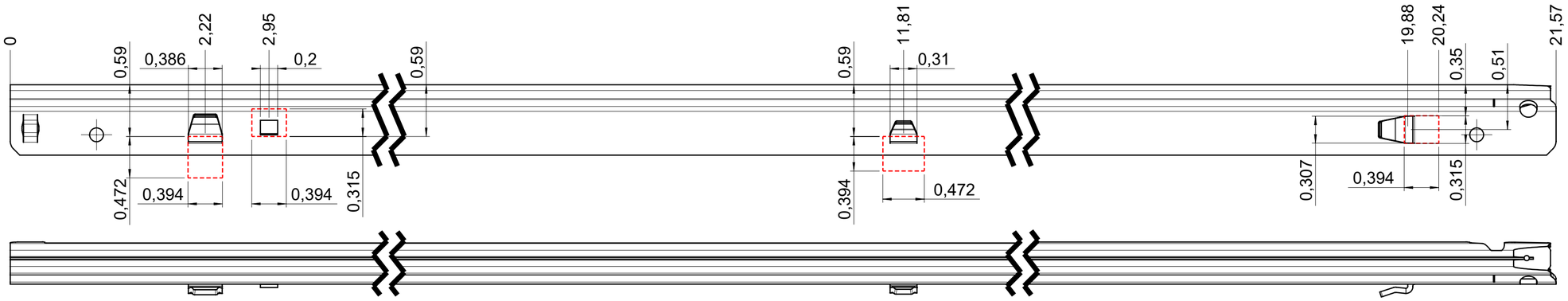

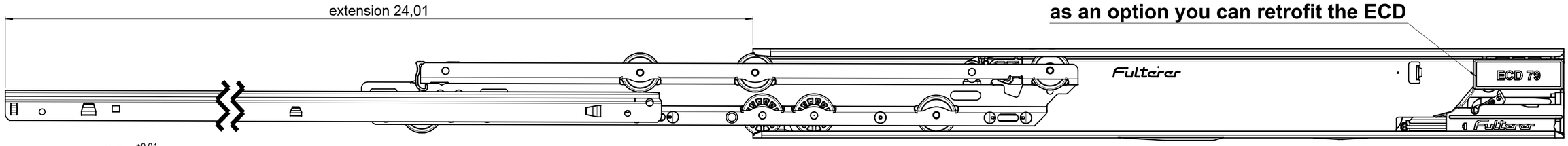

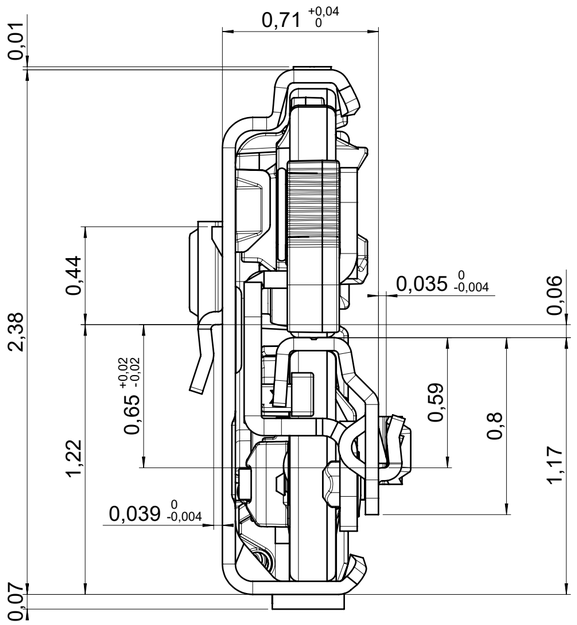

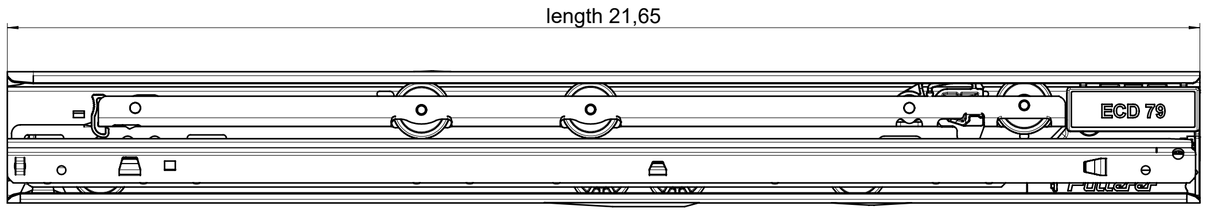

final approval	
	customer name:
	signed by:
	date:

all dimensions in inch

missing dimensions see 3D
= theor. intersection
DIN ISO 128-30
scale: 1:1
surface/color:
material: (technical requirements Fulterer)
CS

prototype approval

	date	name
drawn	2024-03-19	RK
proven	2025-03-21	RM

description:
FR 795-550 CS EN (inch)
progressive-action over-extension drawerslide / side mount

ind.	changes	date	name
a	mounting tab drawer profile	2024-09-26	RK

Fulterer
Fulterer AG & Co KG
A-6890 Lustenau
Fulterer AG
CH-9430 St. Margrethen

drawing number:
CS# 795.550-GA.L538

replaces the edition:

A2

This drawing remains our property and may not be multiplied neither be disclosed to third parties (§§1,3 and 5 from the copyright Act (UrhG)).

covered according to DIN ISO 16016