REVISION HISTORY			
REV.	ECN #	DATE	ENG.

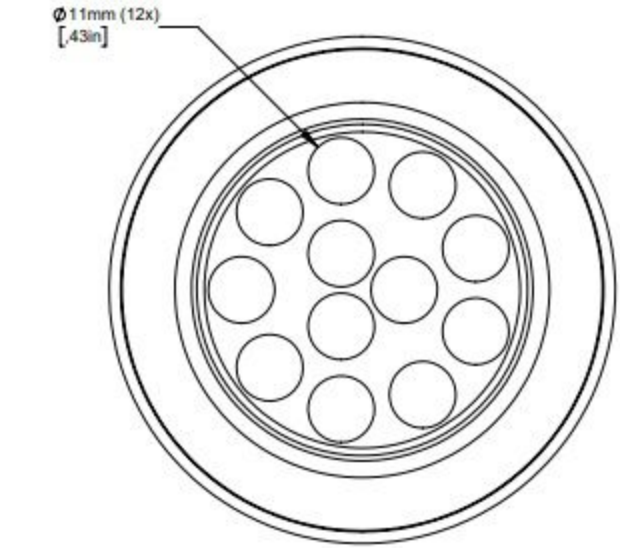

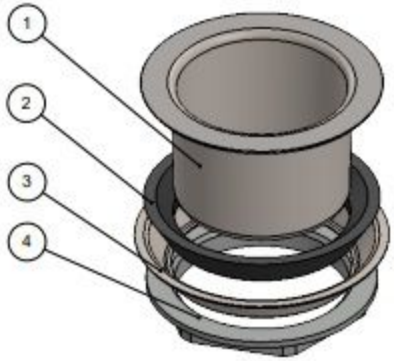

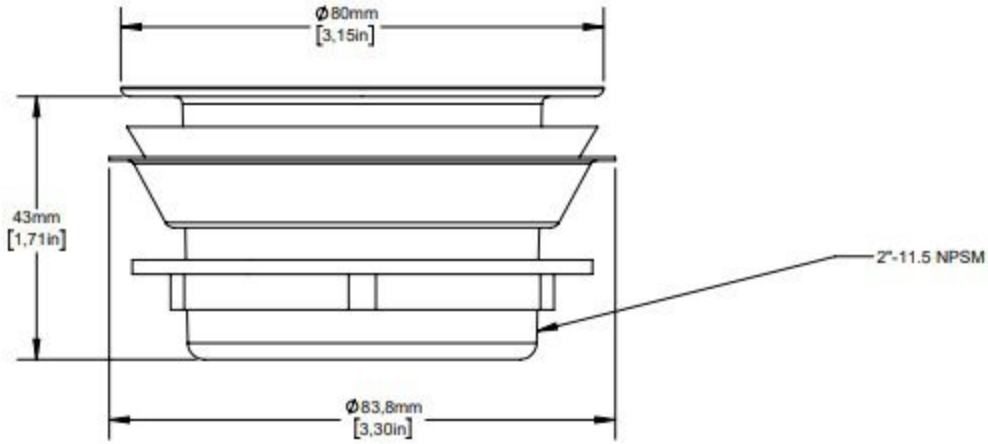

ITEM NO.	DESCRIPTION	Default/ QTY.
1	Drain body 2"-11.5 NPSM	1
2	SEAL FOR SELF-SEAL 2"MINI-DUO DRAIN	1
3	SEAL RING	1
4	FLANGE NUT 2"-11.5 NPSM	1

PROPRIETARY AND CONFIDENTIAL

THE INFORMATION CONTAINED IN THIS DRAWING IS THE SOLE PROPERTY OF COMPONENT HARDWARE GROUP. ANY REPRODUCTION IN PART OR AS A WHOLE WITHOUT THE WRITTEN PERMISSION OF COMPONENT HARDWARE GROUP IS PROHIBITED.

MODEL #: E18-2000

REV.

MATERIAL: Drain Body: AISI 430

PART #: 1003596

FINISH:

WEIGHT: 40,700

	NAME	DATE
DRAWN	AHE	20180903

SALES DRAWING

TITLE: Mini-basket drain S/S, 2", 2"-11.5 NPSM, with locknut washer

THIRD ANGLE PROJECTION

A4 SIZE

CLASS:

SCALE: 1:1

SHEET 1 OF 1