opk Sailing 4 Aluminium Frame 30kg Mounting Instruction

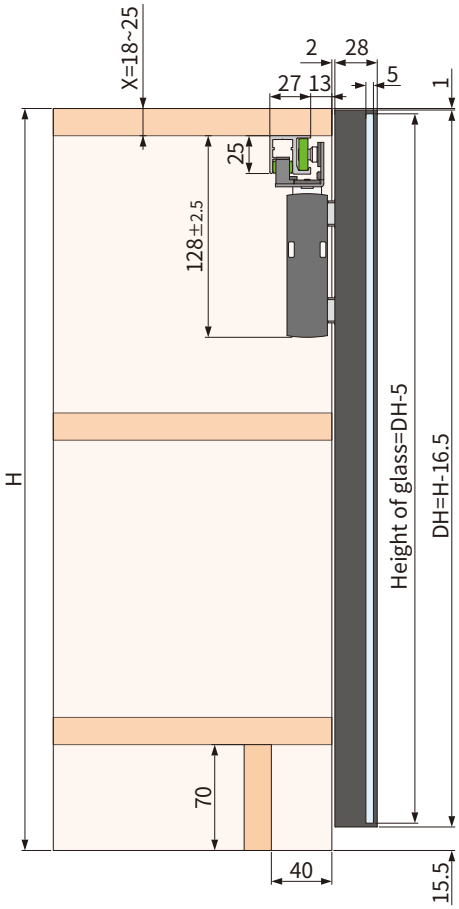

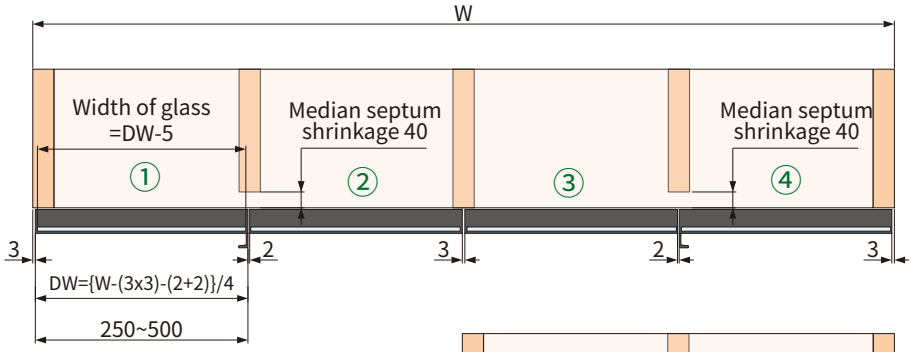

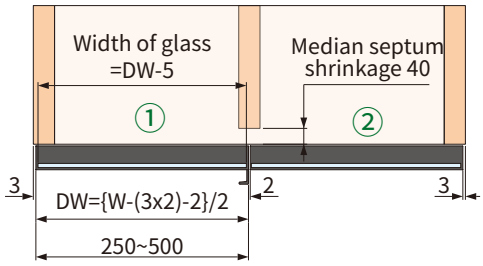

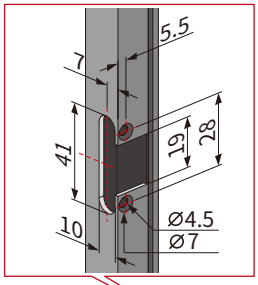

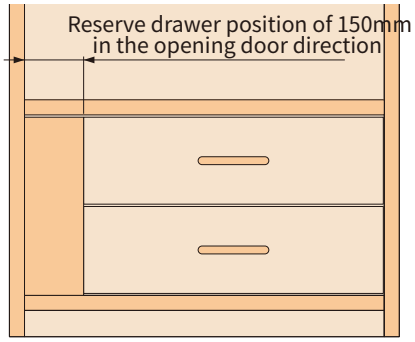

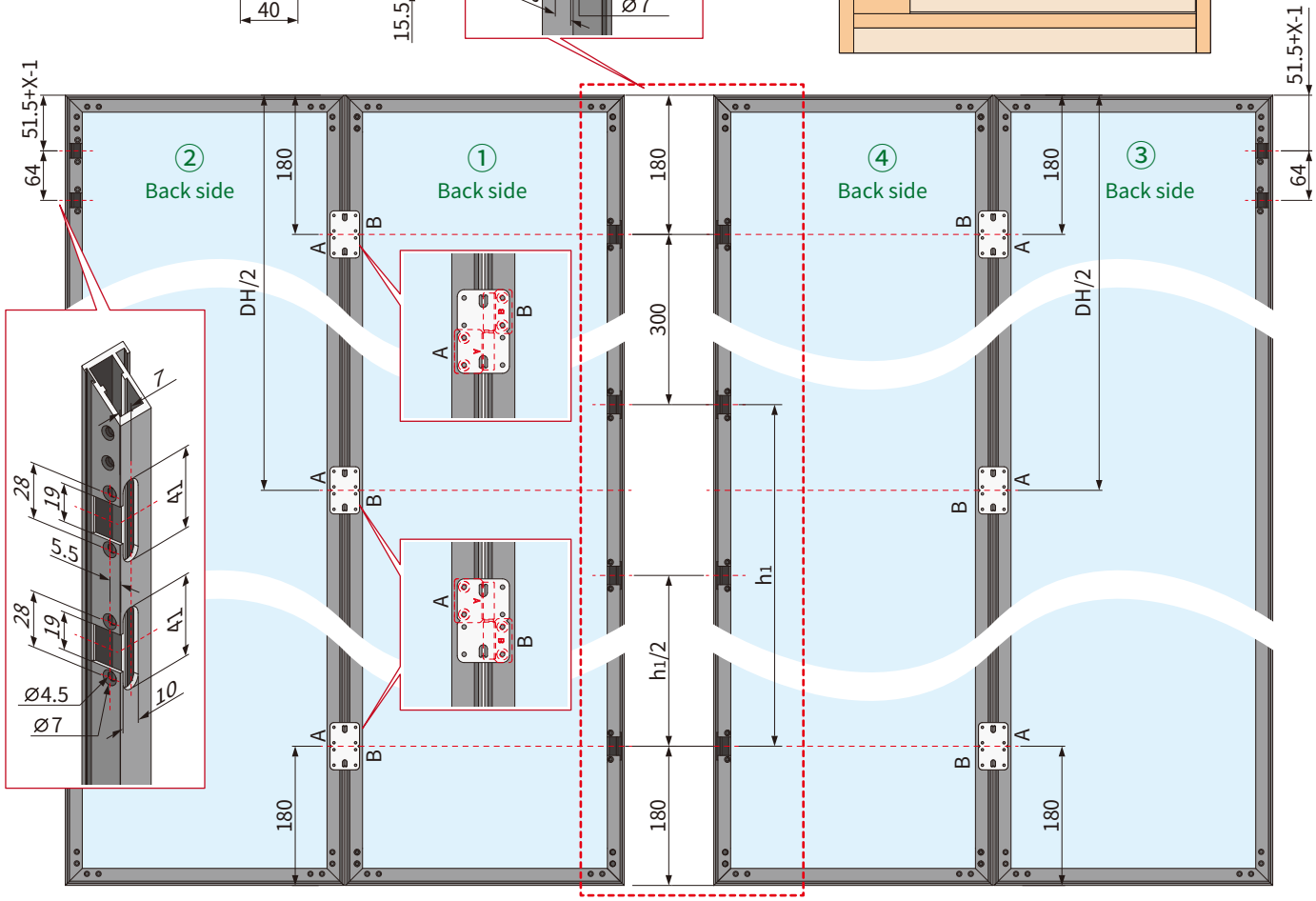

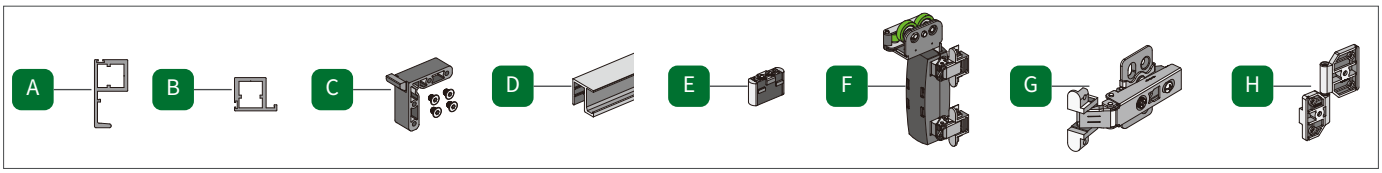

1 Cut the aluminum profile

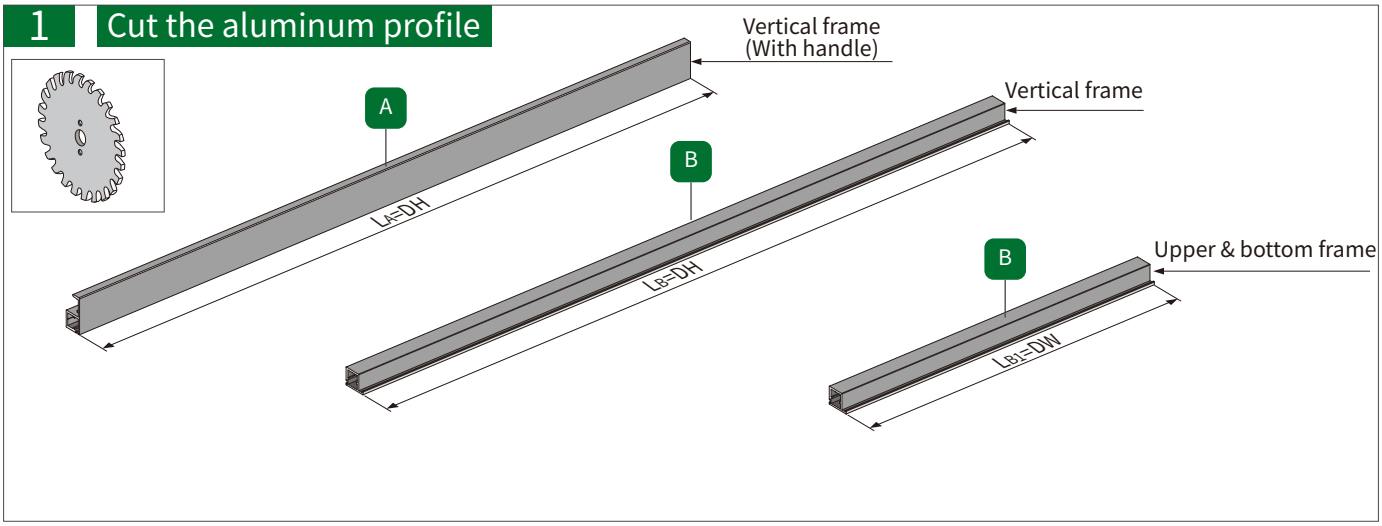

2 Frame connection

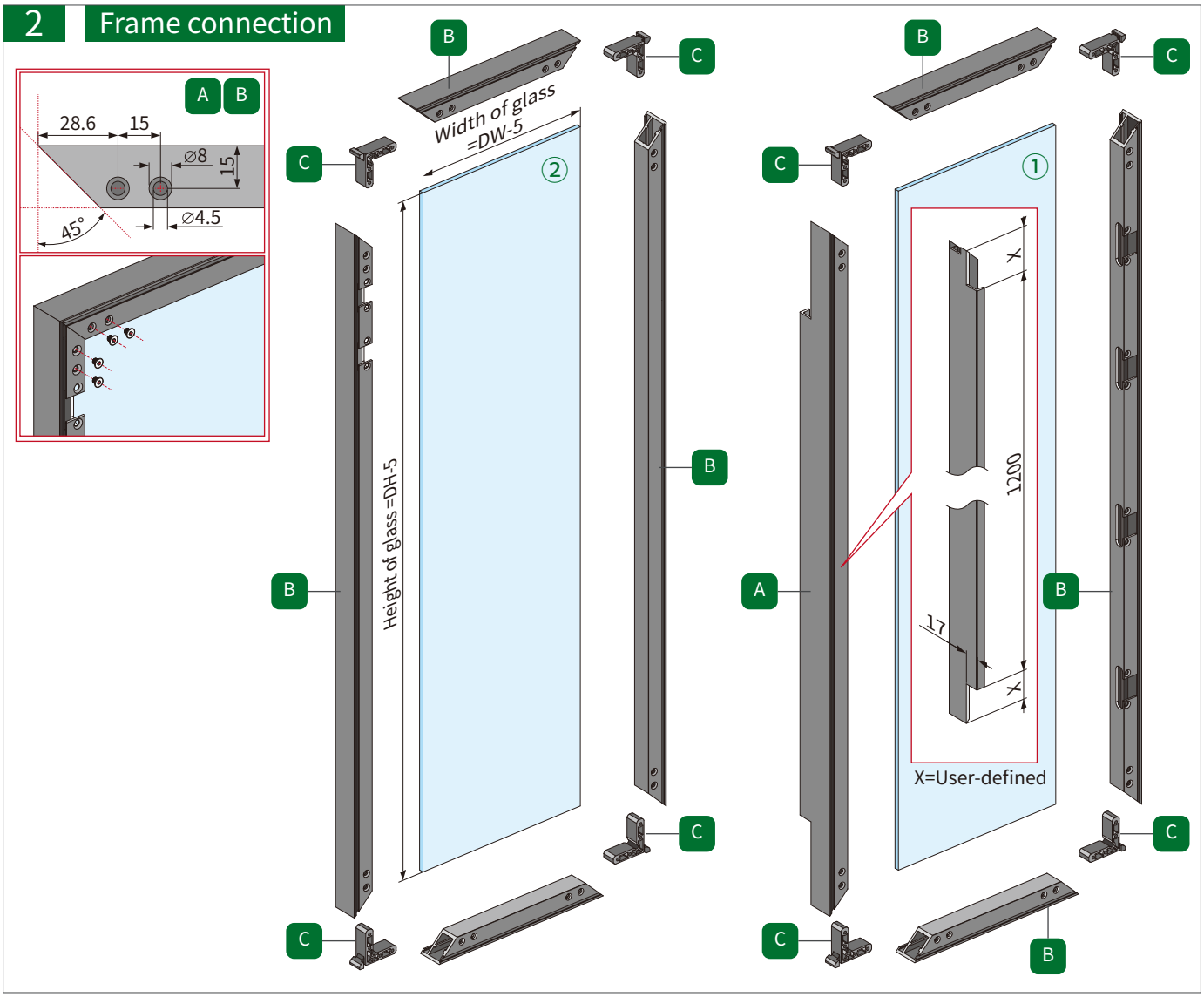

3 Install the track fittings

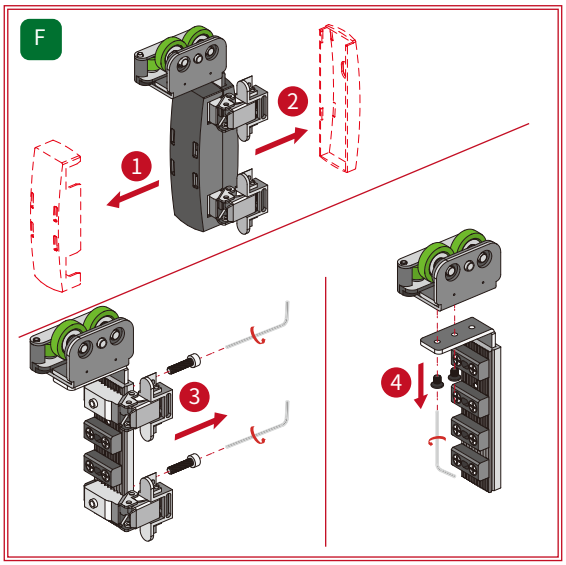

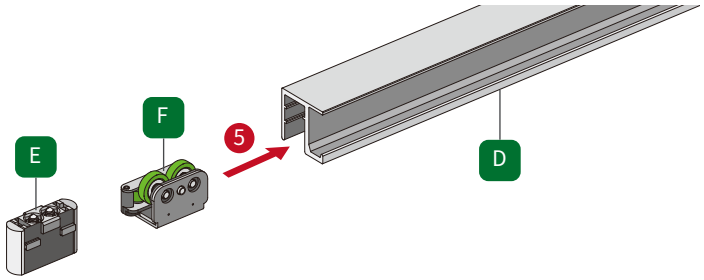

6 Push the stopper to the edge of track

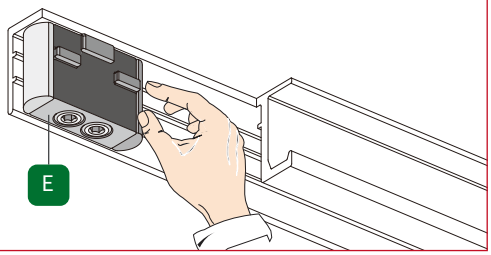

4 Install track

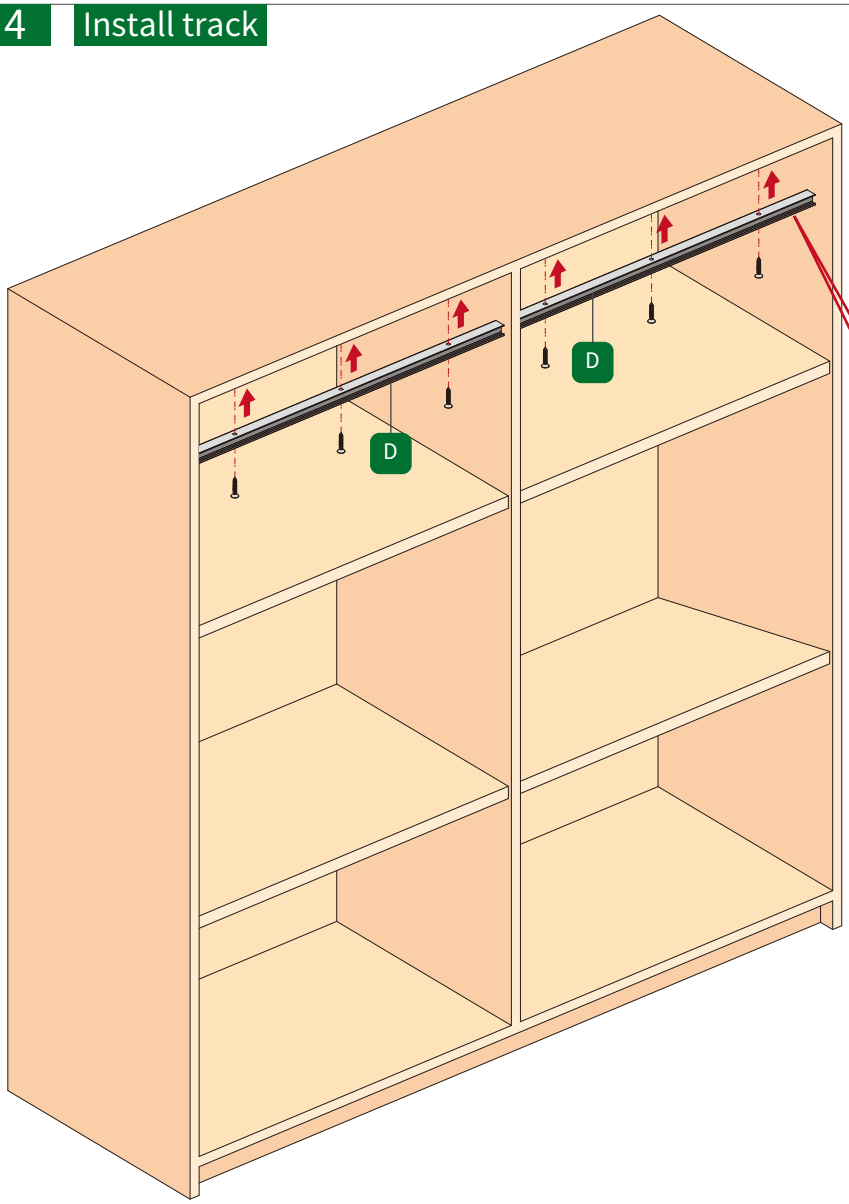

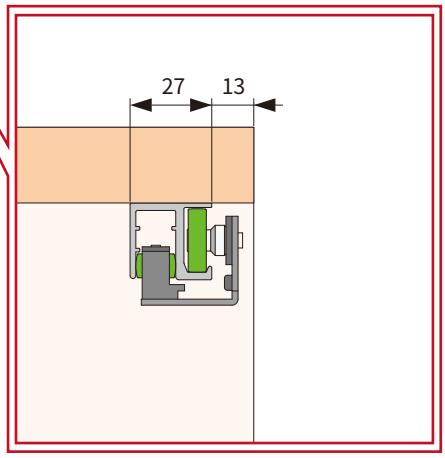

5 Install door panel fittings

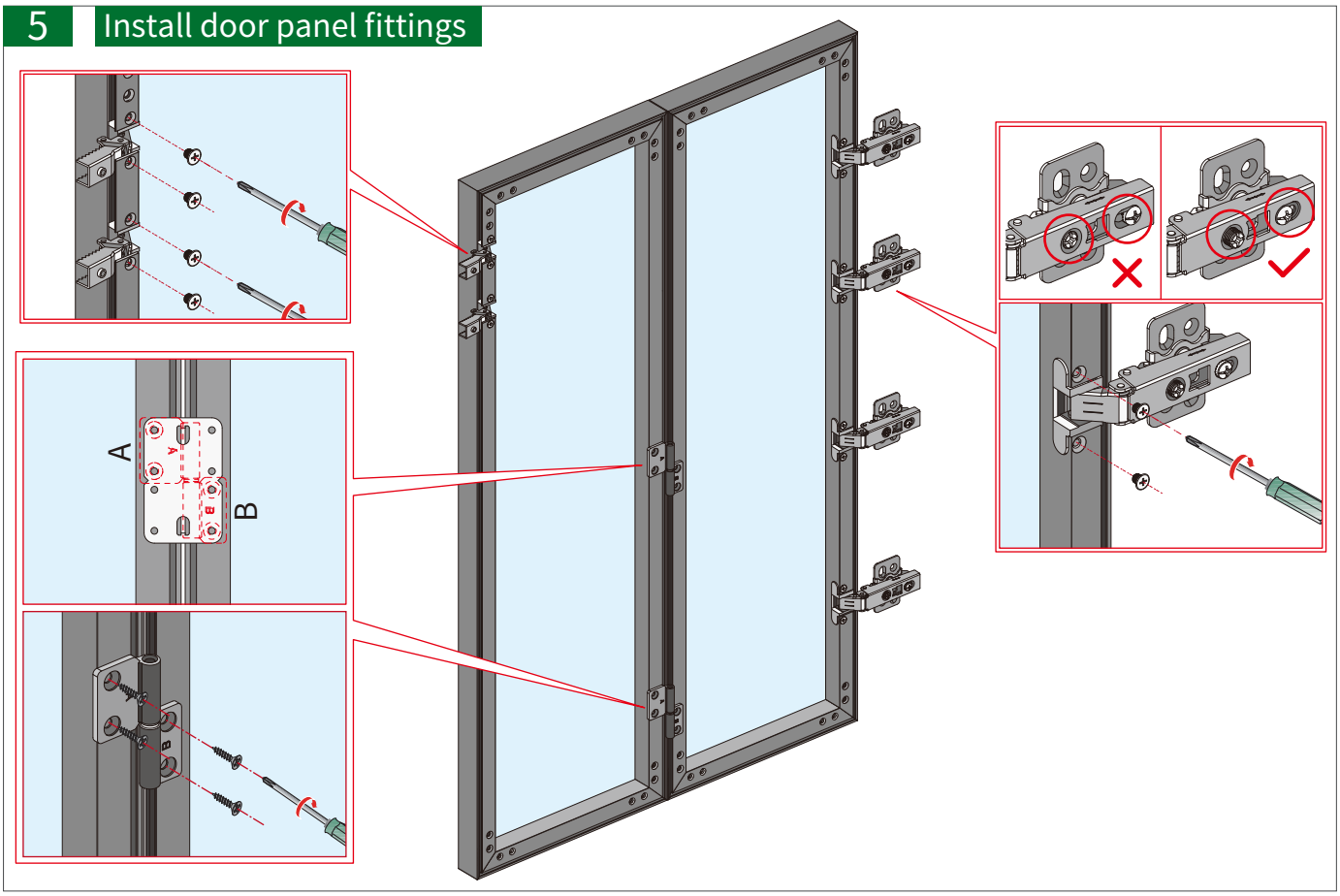

6-1 Install door panel

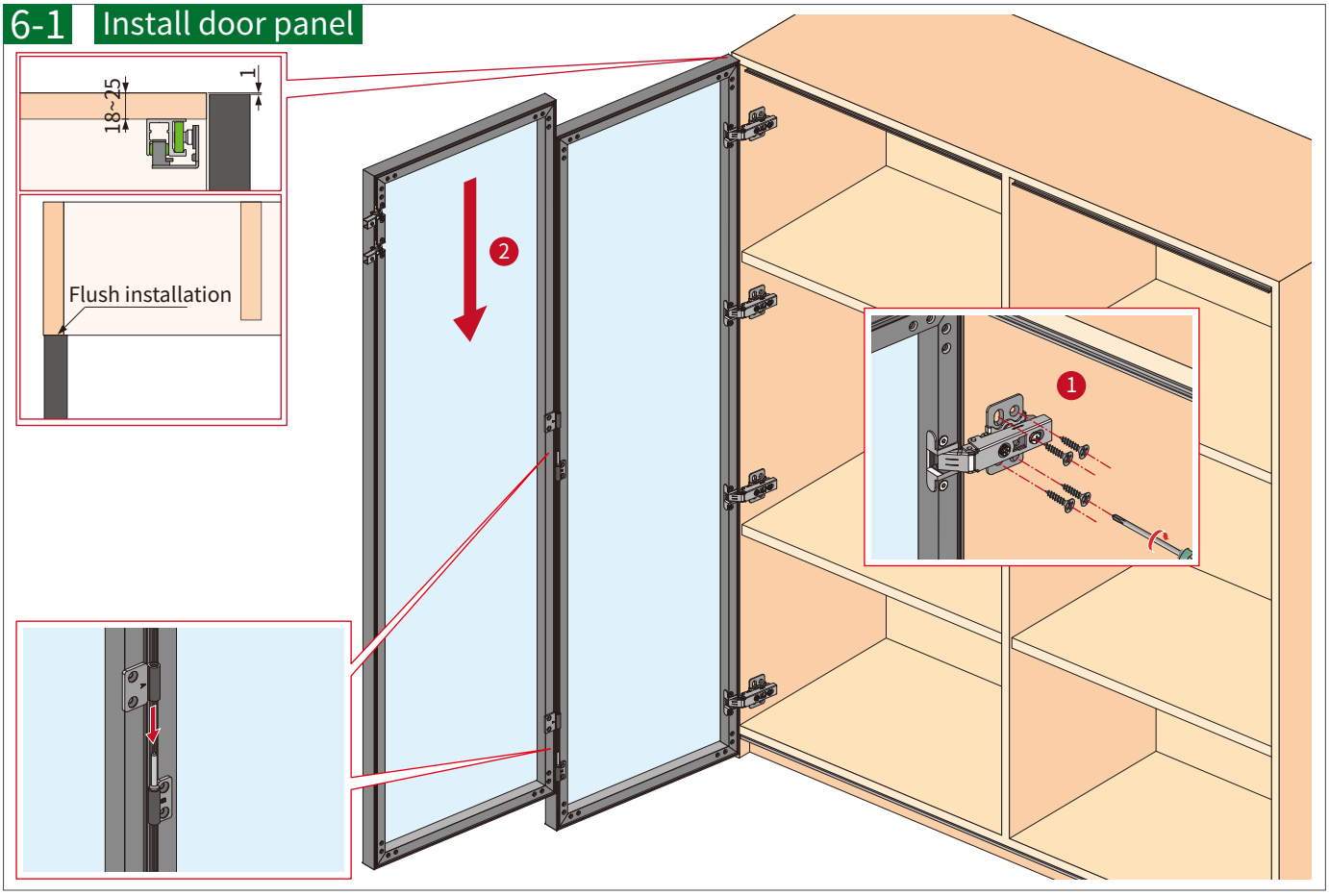

6-2 Install door panel

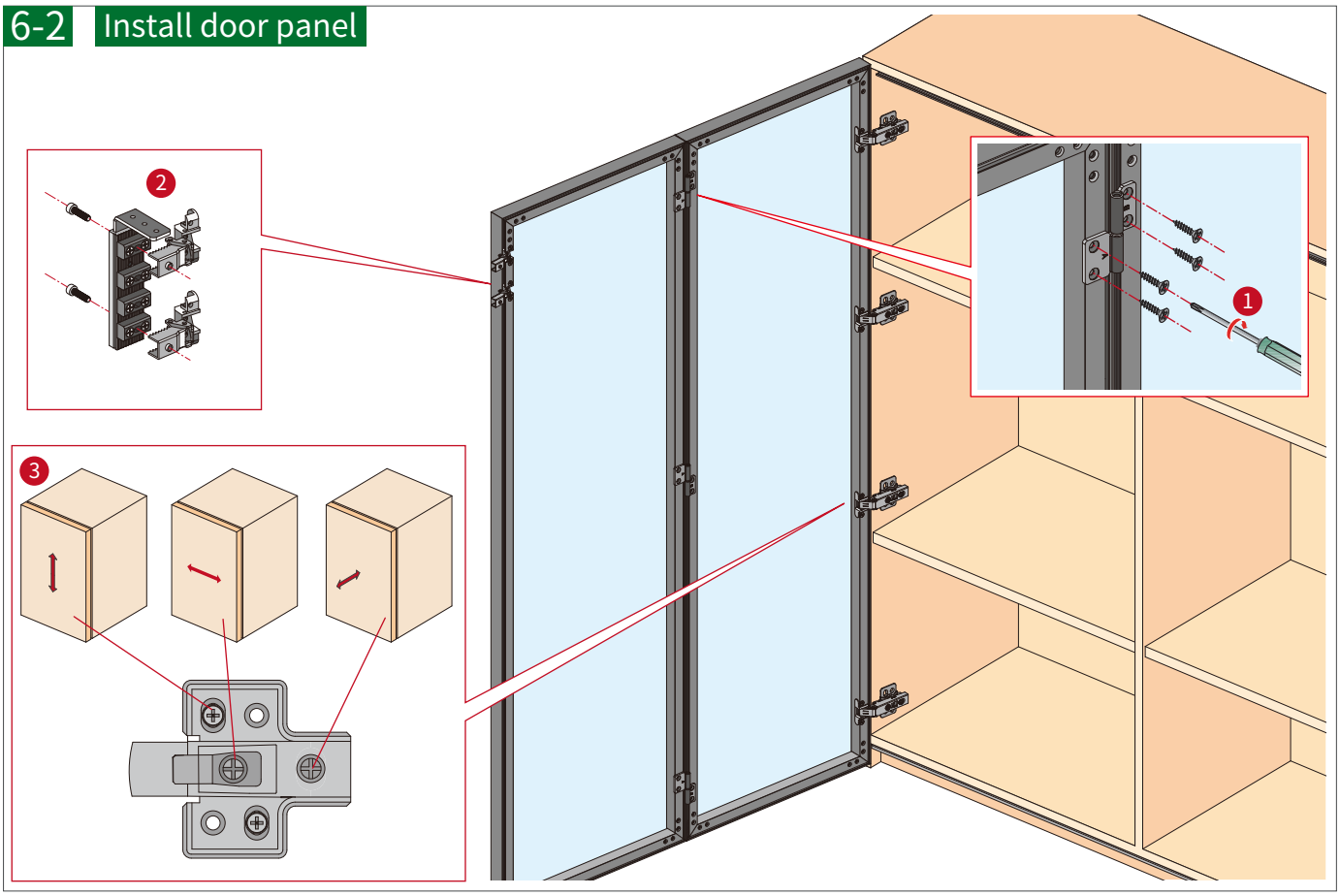

7-1 Adjust the balance of the door panel

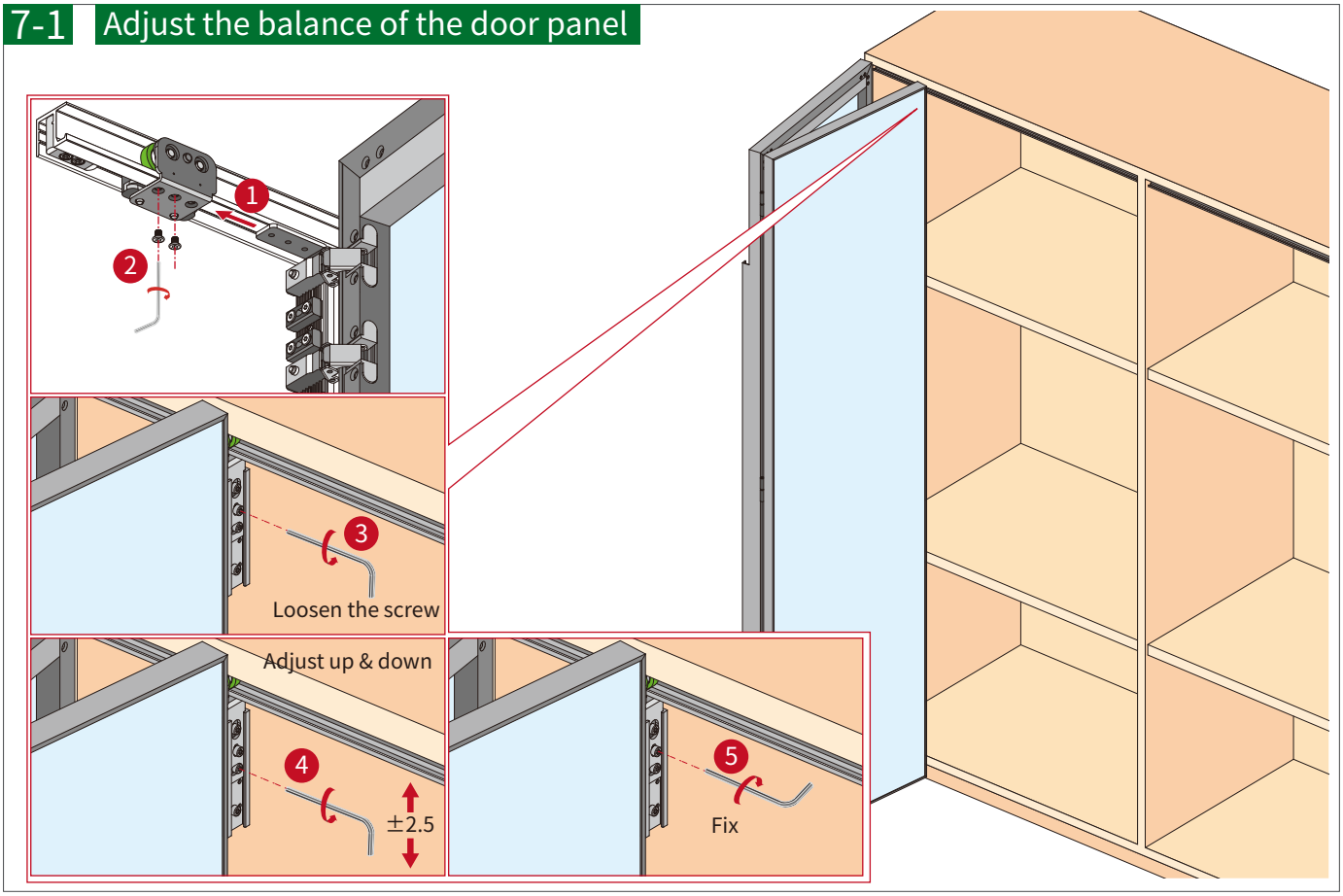

7-2 Adjust the balance of the door panel

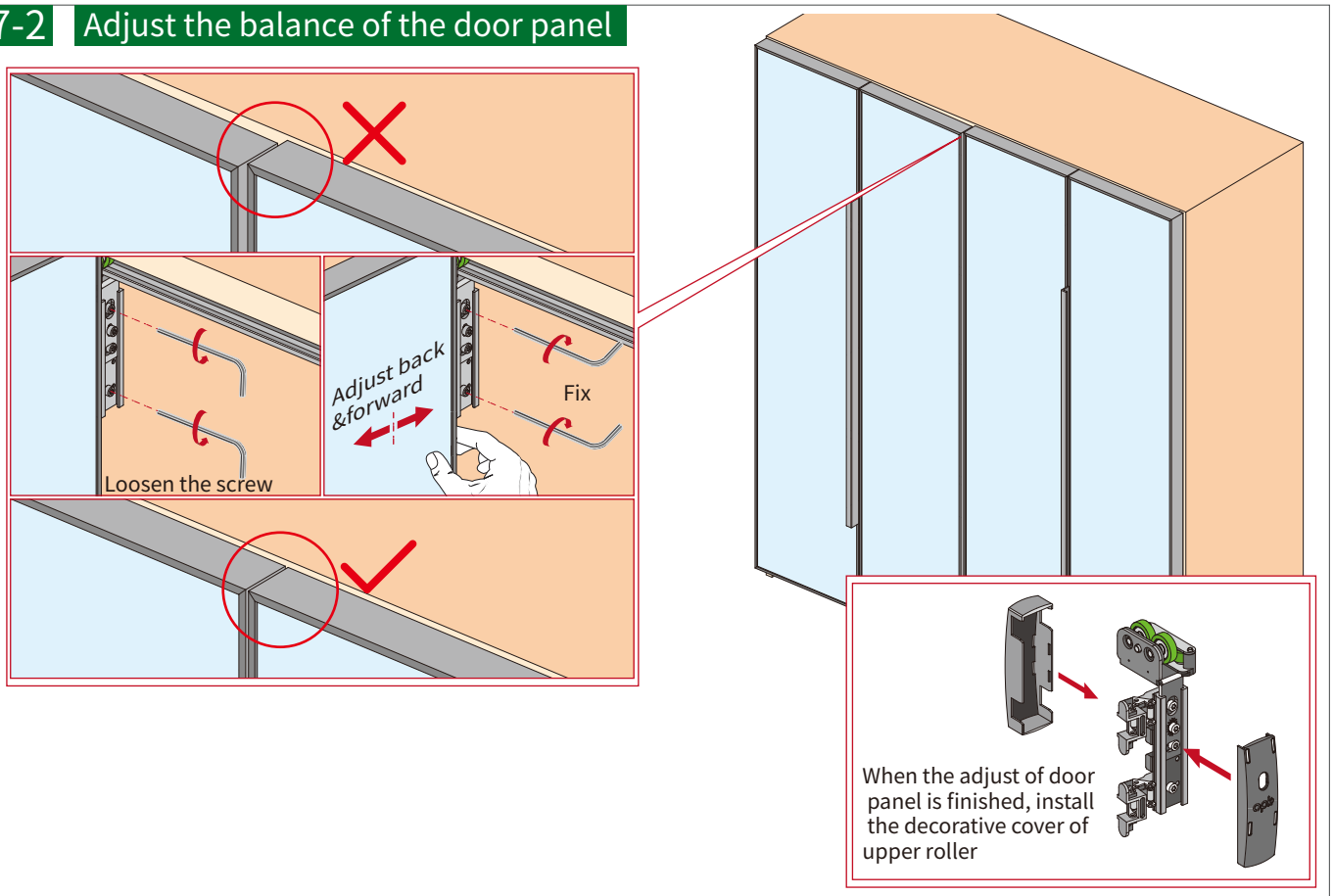
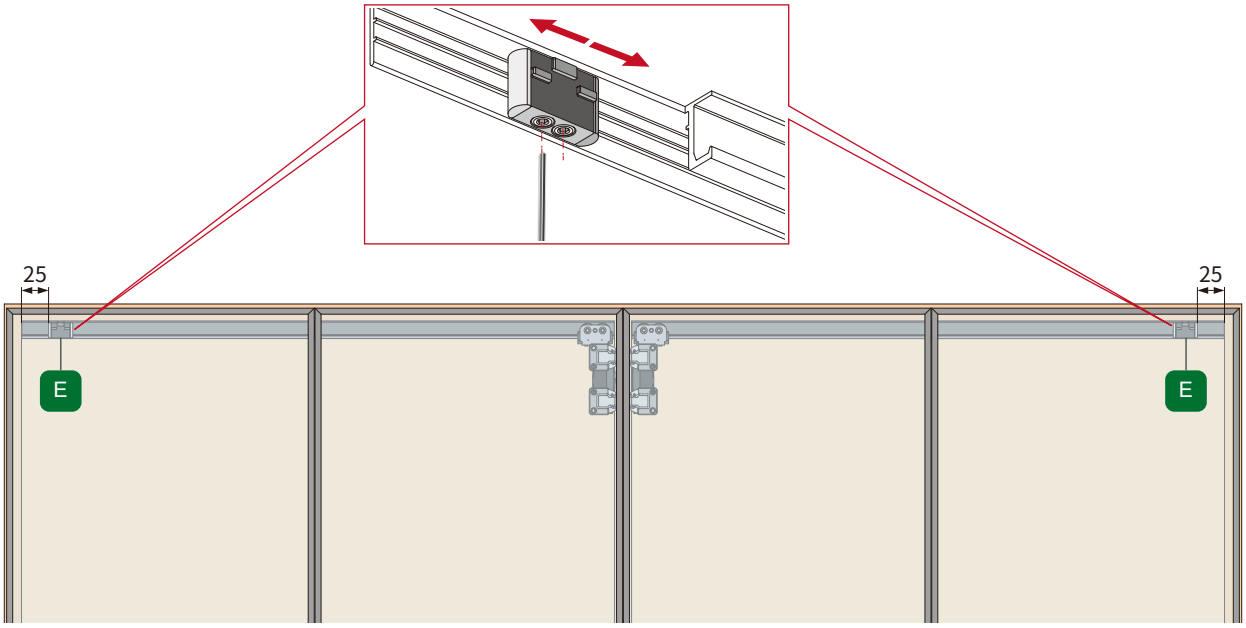
8 Location stopper