Water Leak Detector (BA/LDT) 5 Amp Relays

Termination and Troubleshooting

26268_ins_LDT rev. 10/31/24

Overview & Identification

The Water Leak Detector is designed to sense the presence of water and alert a central monitoring system of the potentially destructive situation. The unit is available in three different models with the Attached Sensor, Remote Sensor and Rope Sensor shown in the figures below.

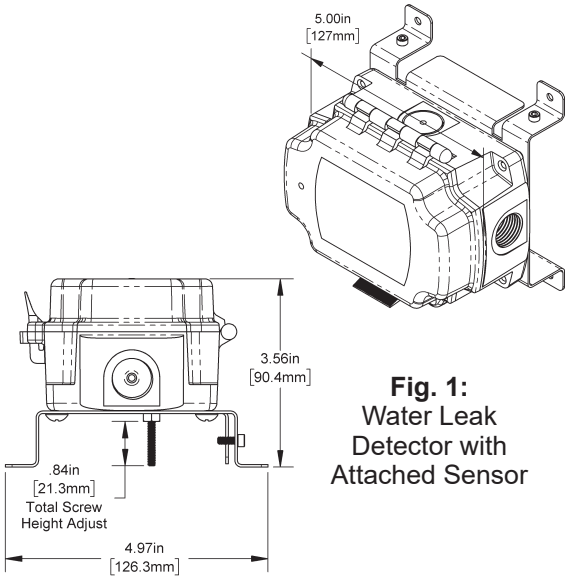

Fig. 1: Water Leak Detector with Attached Sensor

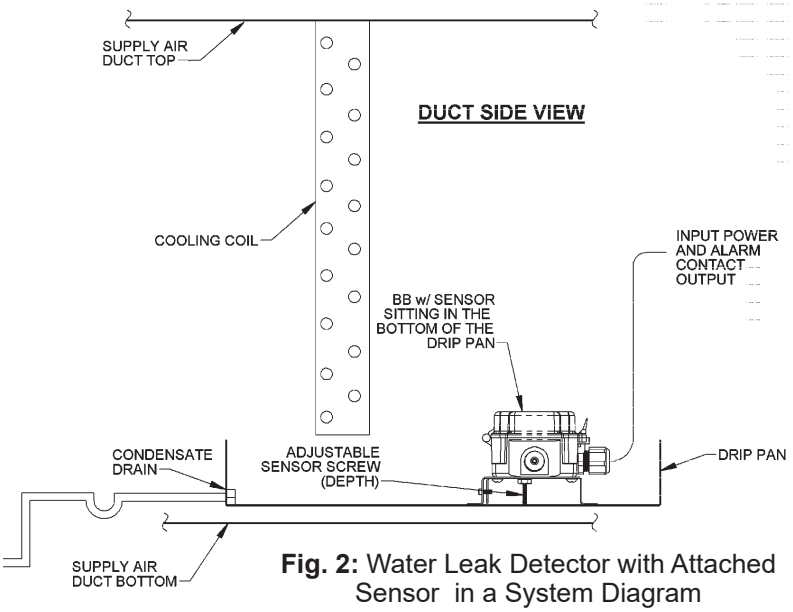

Fig. 2: Water Leak Detector with Attached Sensor in a System Diagram

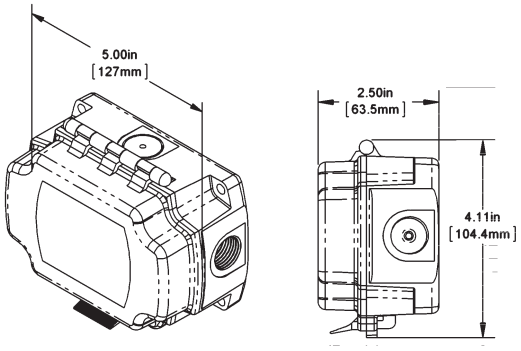

Fig. 3: Water Leak Detector with Remote Spot Sensor (right) and Water Rope Sensor (below)

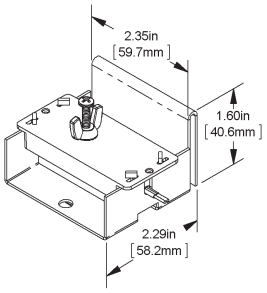

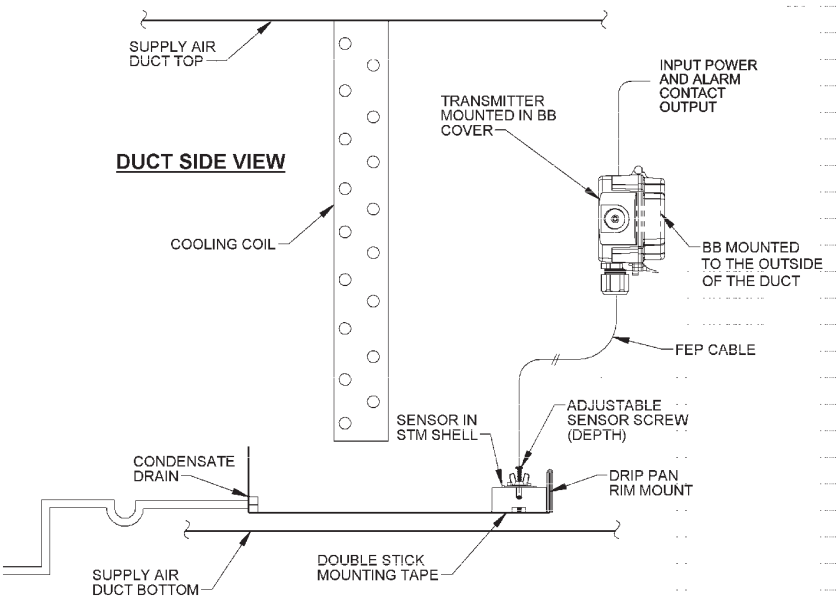

Fig. 4: Water Leak Detector with Remote Spot Sensor

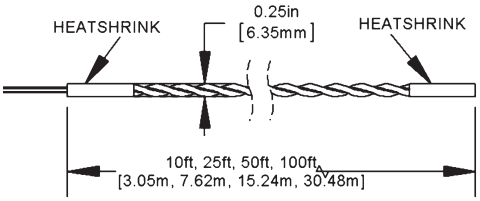

Cautions/Warnings

This unit is not intended to be a safety device. In no event shall BAPI or its officers, directors, employees or agents be liable to any company or individual for any indirect, incidental, special, exemplary, punitive or consequential damages including, without limitation, economic or commercial losses, arising out of or resulting from the misuse of this water detector as a safety device.

Building Automation Products, Inc., 750 North Royal Avenue, Gays Mills, WI 54631 USA
Tel:+1-608-735-4800 • Fax+1-608-735-4804 • E-mail:sales@bapihvac.com • Web:www.bapihvac.com

Mounting

ATTACHED SENSOR

1. Set the sensor in a location where a water leak is likely to occur.
2. Use the 4 screw holes on the feet of the bracket to secure the sensor. BAPI recommends stainless steel screws (not included).
3. Adjust the depth screw with the wing nut to set the alarm depth for detecting leaks as shown in Fig. 5.
4. Terminate the unit as described in the Termination section.

REMOTE SPOT SENSOR

1. The sensor can be secured to a flat surface using the adhesive mounting strips (Fig. 7) or a screw (Fig. 8). It can also be mounted to a drip pan rim using the provided 7/64” hex set screws as shown in Fig. 6. If using the adhesive mounting strip, clean the surface before adhering.
2. Adjust the depth screw with the wing nut to set the alarm depth for detecting leaks as shown in Fig. 9.
3. Mount the BAPI-Box with the transmitter in a visible location within cable length of the Remote Spot Sensor.
4. Terminate the unit as described in the Termination section.

ROPE SENSOR

1. The sensor can be laid on the floor or around pipes as shown in Figs. 10, 11, 12, & 13.
2. Secure the sensor by using BAPI’s Rope Sensor Mounting Brackets (see pg 3).
3. Mount the BAPI-Box with the transmitter in a visible location within cable length of the Rope Sensor.
4. Terminate the unit as described in the Termination section.

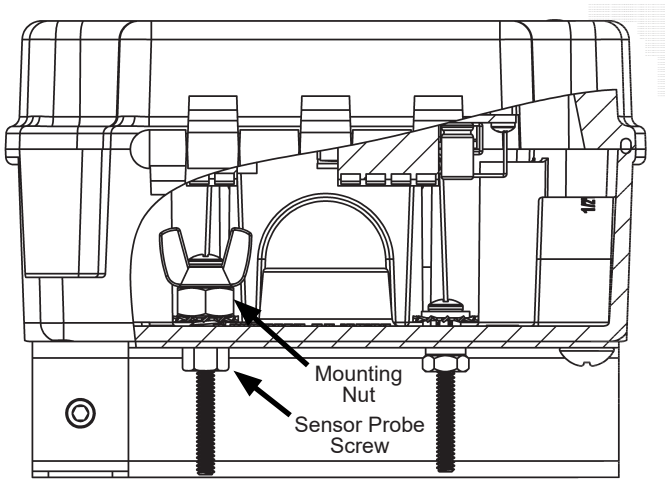

Fig. 5: Leak Detector with Attached Sensor

(Attached sensor can also be mounted to a drip pan rim using the provided 7/64” hex set screws as shown above.)

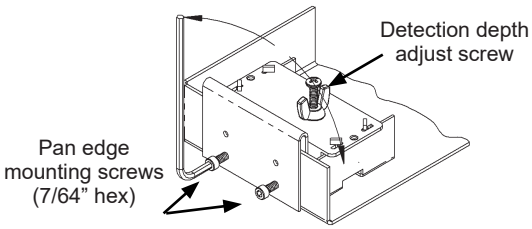

Fig. 6: Remote Spot Sensor Pan Rim Mounting

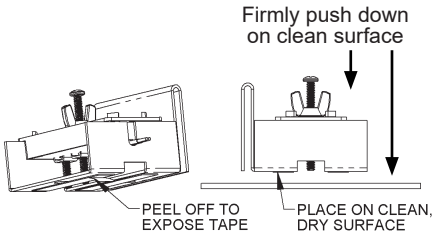

Fig. 7: Remote Spot Sensor Tape Mount

Fig. 8: Remote Sensor Floor Mount

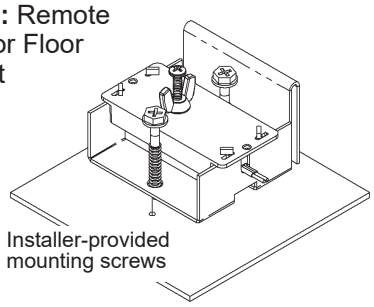

Fig. 9: Remote Spot Sensor Depth Adjust

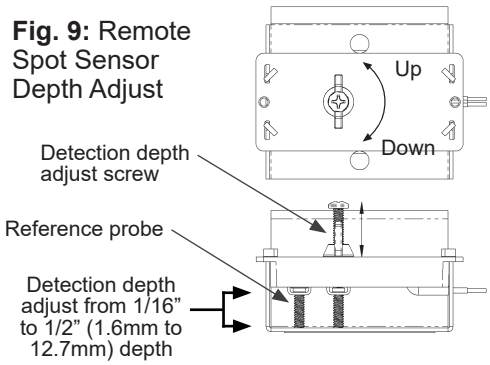

1. Loosen wing nut.
2. Set the required depth of the sensor probe screw using a #2 Phillips screwdriver.
3. Hold the sensor probe screw stationary with the screwdriver.
4. Turn the wing nut down the probe screw until it engages the plastic.
5. Tighten the wing nut 1/4 turn into the plastic.

Mounting continued...

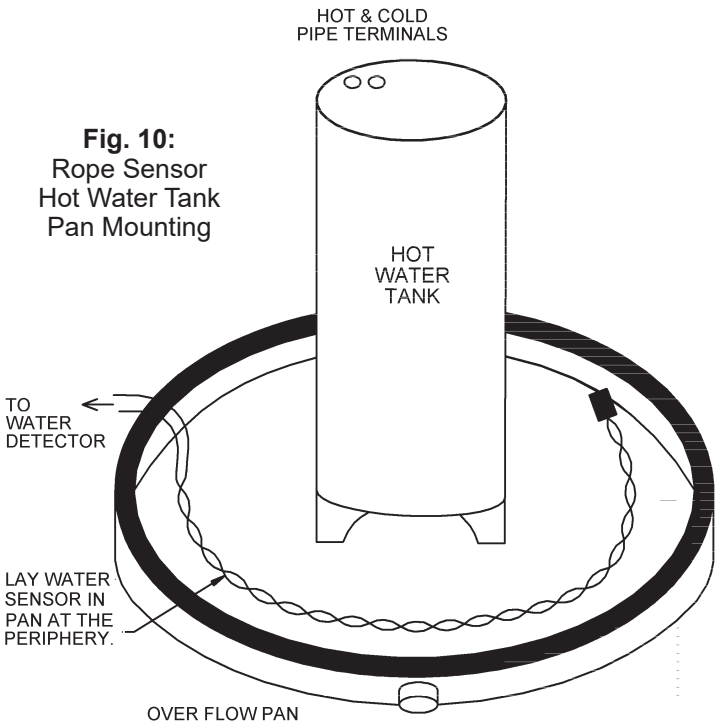

Fig. 10: Rope Sensor Hot Water Tank Pan Mounting

Secure Rope Sensor directly to floor every 5 feet (1.5m). It is important that the rope be pulled tight so it lays flat on the floor.

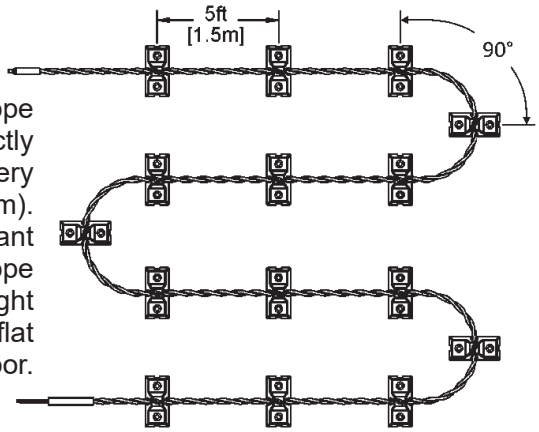

Fig. 11: Sub-Floor Rope Sensor Mounting

Rope Sensor Mounting Bracket

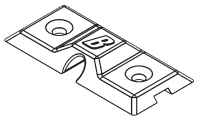

The BAPI Rope Sensor Mounting Bracket is specifically designed to hold the rope taut and prevent rope slippage allowing for maximum contact with the monitored surface. Bracket can be easily mounted to flat surfaces utilizing the industrial adhesive backing or the built in screw holes.
Part Number: BA/LDT-RR-MB

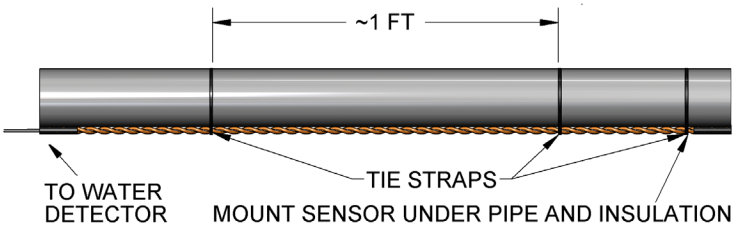

Fig. 12: Horizontal Pipe Rope Sensor Mounting

Fig. 13: Vertical Pipe Rope Sensor Mounting

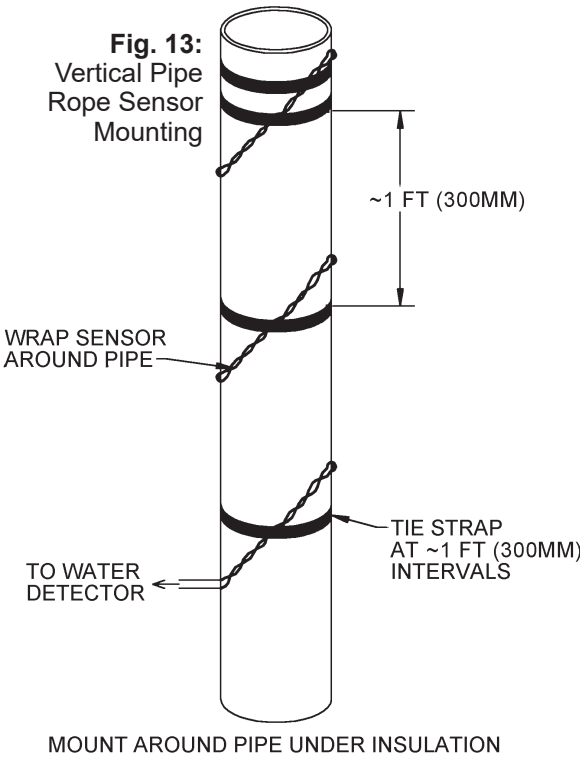

Combining Sensors

The following combinations of sensors can be used:

1. Two rope sensors with a combined length of no more than 100ft (30.m).
2. Two spot sensors with a combined length of no more than 75ft (22.8m).
3. One spot sensor with a maximum length of 25ft (7.6m) and one rope sensor of no more than 50ft (15.2m).

Wiring and Termination

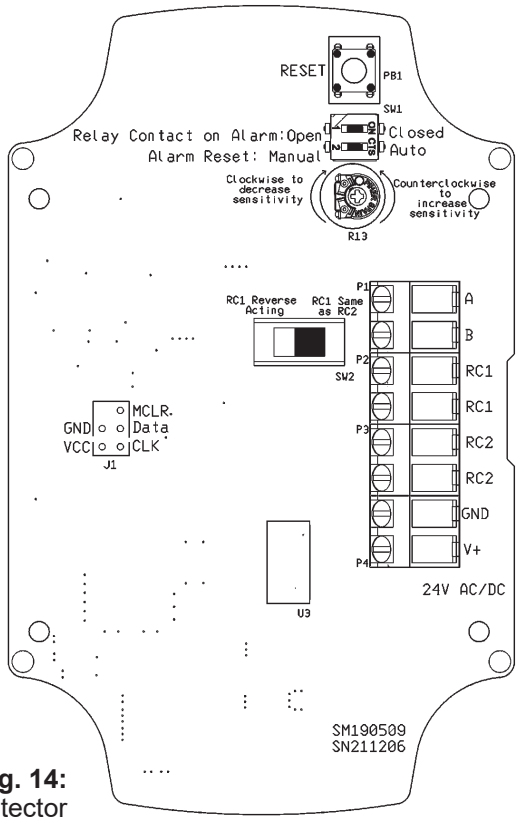

Fig. 14: Leak Detector Circuit Board

Terminal	Description
A	Water Leak Sensor (no polarity)
B	Water Leak Sensor (no polarity)
RC1	Relay Contact 1 (no polarity)
RC1	Relay Contact 1 (no polarity)
RC2	Relay Contact 2 (no polarity)
RC2	Relay Contact 2 (no polarity)
GND	Power Supply Ground
V+	Power Supply Input, 24VAC/VDC ±10%

Note: This unit does not require a separate isolated power supply. The unit includes circuitry to isolate the power supply used to power the unit.

Sensitivity Adjustment for 10' and 100' Remote Rope Sensors

The unit's leak detection sensitivity is set at the factory. However, for the 10ft (3.0m) and 100ft (30.5m) remote rope sensors, the sensitivity may need to be adjusted in the field.

If you are using a 10ft (3.0m) remote rope and it won't respond, rotate the sensitivity adjustment potentiometer counterclockwise.

If you are using a 100ft (30.5m) remote rope and it is too sensitive, then rotate the sensitivity adjustment potentiometer clockwise.

Adjust the sensitivity until the unit consistently detects leaks without causing false trips during commissioning.

Note: The Sensitivity Adjustment Potentiometer is set at the factory to the fully counterclockwise (most sensitive) position.

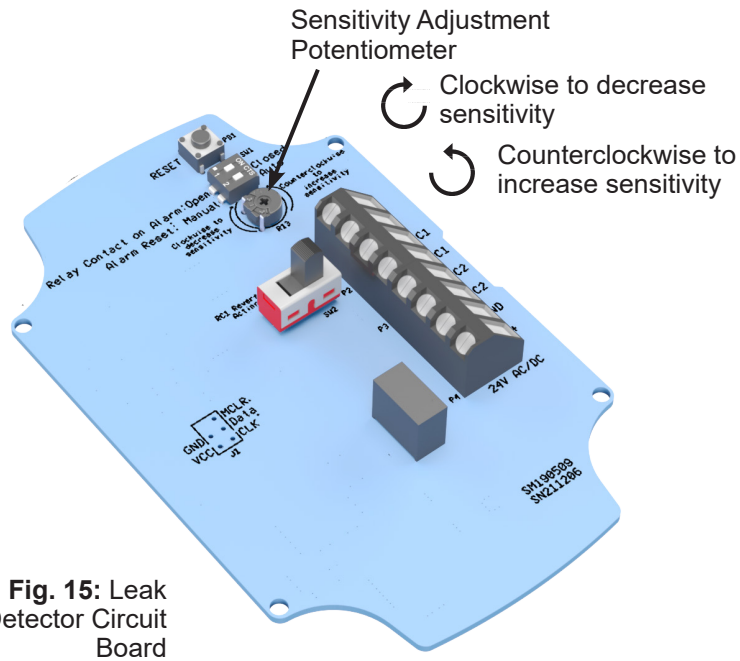

Fig. 15: Leak Detector Circuit Board

Set Up and Commissioning

INDICATION/CONTROLS	DESCRIPTION
Red LED	LED illuminates when water is detected
Green LED	LED illuminates when normal power is applied
Reset Button	Resets manual alarm contact (only if water is no longer present)

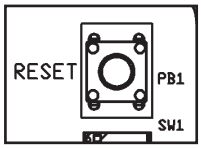

Fig. 16: Reset Button

FIELD CONFIGURABLE DIP SWITCH (SW1) SET UP

Relay Contact on Alarm Switch (Fig 17)

Selects how the alarm contact connected to the RC2 terminals behaves. “Open” means that the contact will be an open circuit when water is detected. “Closed” means that the contact will be a closed circuit when water is detected.

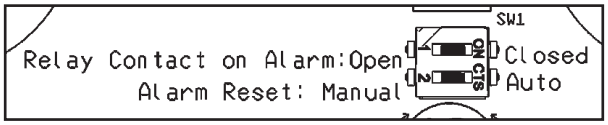

Fig. 17: Relay Contact and Alarm Reset Switches

Alarm Reset Switch (Fig 17)

Selects whether the alarm will be latched ON after a leak detection (Manual) or if it will automatically reset the alarm once the leak is no longer present (Auto).

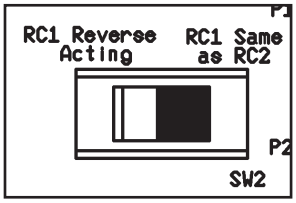

Fig. 18: Relay Switch

Reverse Acting or Same Acting Relay Switch - SW2 (Fig 18)

Selects how the alarm contact connected to the RC1 terminals behaves. “RC1 Reverse Acting” means that RC1 will behave the opposite of RC2.

NOTE: If unit is set to Normally Closed, contact will open with loss of power indicating a leak.

COMMISSIONING

1. After the unit is installed and wired, turn on the power. (24VAC/VDC ±10%)
2. Check that the green LED is “ON”. If it is not “ON”, check the power source.
3. Dampen a cloth or sponge and touch the screws of the Attached Sensor or Remote Spot Sensor. If using a Rope Sensor, wrap the cloth or sponge around the rope. An alarm should occur within 5 seconds.
4. The red LED should illuminate and the alarm contacts should change state. To check alarm contact status, measure the resistance at the relay contacts or monitor the status from the BAS screen.
5. Remove the dampened rag or sponge to clear the alarm. If the unit is set up for a Alarm Reset: Manual, the operator must push the reset switch on the detector board or interrupt power to clear the alarm.

Detectable Liquids

The sensors are designed to detect the presence of water and other conductive fluids. BAPI has performed tests on multiple liquid types to see which are detectable and which are not. Before leaving the installation, always check the sensor with the liquid you are trying to detect as every environment and application may be different.

DETECTABLE: Water, De-ionized water, Distilled Water, Reverse Osmosis (RO) Water

NOT DETECTABLE: Oil, Diesel Fuel, Unleaded Fuel

Maintenance

Check the water sensor probe once a year to be sure there is no dirt or debris collected around the probes. Dirt or debris around the probes may cause nuisance alarms in moist situations. Change the service intervals depending on environmental conditions. In very clean conditions the probe may never need maintenance. Rope sensor may be wiped down with isopropyl alcohol, warm soapy water on a cotton cloth or placed in a dishwasher.

Diagnostics

Possible Problem	Possible Solution
Green LED Not On	1. Check for proper power to the unit (see power specs).
Red LED Not Working Or Alarm Contact Not Changing State	1. Check for proper power to the unit (see power specs). 2. Physically check for water to verify it's touching both screws on the Attached Sensor or Remote Spot, or touching the Rope Sensor. 3. Adjust sensor probe depth on the Attached Sensor or Remote Spot if necessary. 4. For Rope Sensor units, check the sensitivity adjustment as described on page 4.
Unit Will Not Reset	1. Check for the presence of water or debris on the sensor. 2. Be sure the sensor wires are not shorted. 3. Push the reset button and/or cycle power. 4. For rope sensor units, check the sensitivity adjustment as described on page 4.

Specifications

Power:
24VAC/VDC ±10%, 3.9VA max @ 24VAC, 90mA max @ 24VDC (Reverse Polarity Protected)
Note: This unit does not require a separate isolated power supply.

Rectification:
Half Wave

Wiring:
Screw Terminals: 2 to 4 pair of 12 to 22AWG (BAPI recommends 16 to 22AWG).
Water Detection Sensor: 2 wires (provided), optional Flex Connector or Liquid Tight Fitting for strain relief

Sensor:
Rope Sensor: Plenum-rated sensor cable, detects 1/8" (3.2mm) of water. Max length: 100' (30.5m)
Internal termination rope sensor lead wires, 22 AWG

Attached Sensor: Sensor w/ adjustable depth screw from 0.063 to 0.84" (1.60 to 21.34mm)

Remote Sensor: Sensor w/ adjustable depth screw from 0.062 to 0.5" (1.57 to 12.70mm)

(Attached and Remote Sensors are designed to be mounted to flat surfaces or on the rims of drip pans.)

Alarm Reset Action: Field selectable for Auto (Non-Latching) or Manual (Latching**)**

Local Indication:
One green power LED, one red alarm LED

Alarm Relay Contacts:
Two SPDT, 5 Amp relay outputs

Operating Environment
Remote Sensor: -20 to 185°F (-29 to 85°C)
Rope Sensor: 32 to 167°F (0 to 75°C)
Detector (BB): -4 to 158°F (-20 to 70°C), 0 to 95%RH, non-condensing

Enclosure Material and Ratings:
NEMA 4 (IP66), UV-resistant polycarbonate, UL94 V-0

Agency:
CE 61326-1:2013 EMC (Industrial Electromagnetic Environment), RoHS, UL

Warranty:
5 years

Specifications subject to change without notice.