IWO group

Rubber Bumpers

and Adjustable feets

Rubber Bumpers

OK.2010

Rubber bumper for round tube Ø 20mm

- material - rubber
- colour - grey
- external diameter - 143mm -
- pipe hole = 20 mm

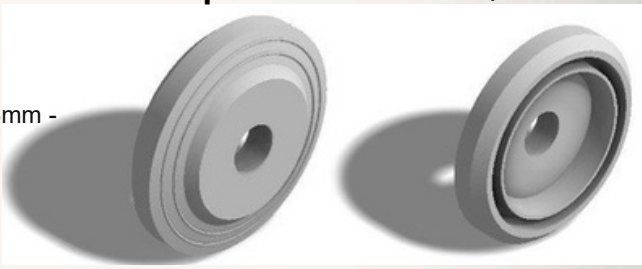

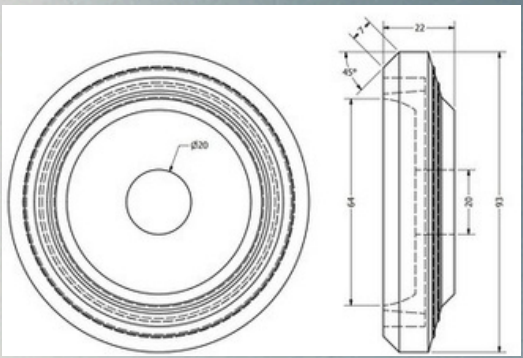

OK.2510

Rubber bumper for round tube Ø 25mm

- material - rubber
- colour - grey
- external diameter - 143mm
- pipe hole = 25 mm

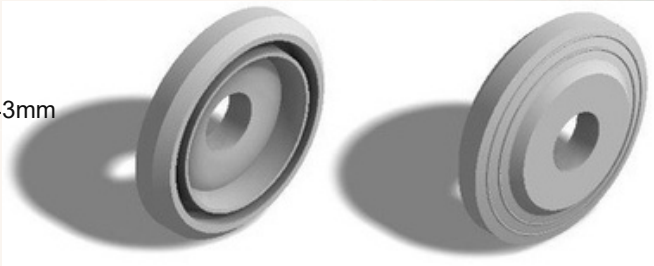

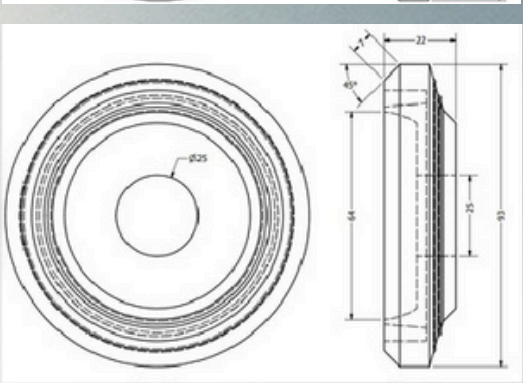

OK.3010

Rubber bumper for round tube Ø 30mm

- material - rubber
- colour - grey
- external diameter - 143mm
- pipe hole = 30 mm

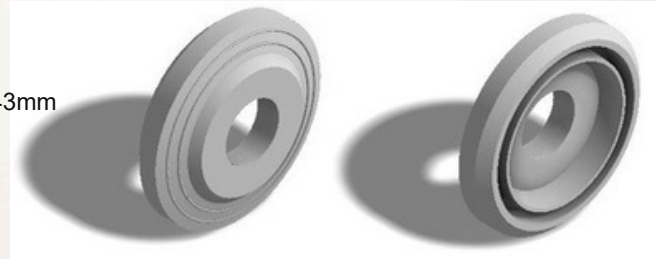

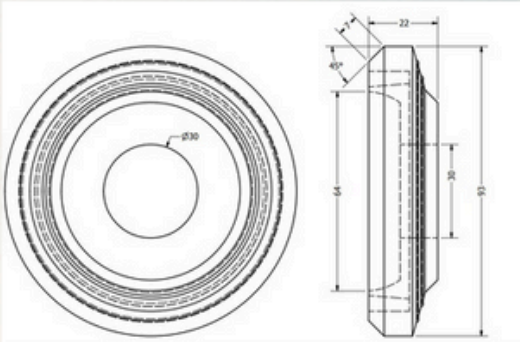

OK.3210

Rubber bumper for round tube Ø 32mm

- material - rubber
- colour - grey
- external diameter - 143mm
- pipe hole = 32 mm

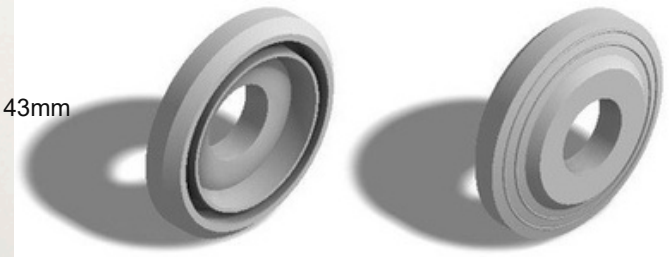

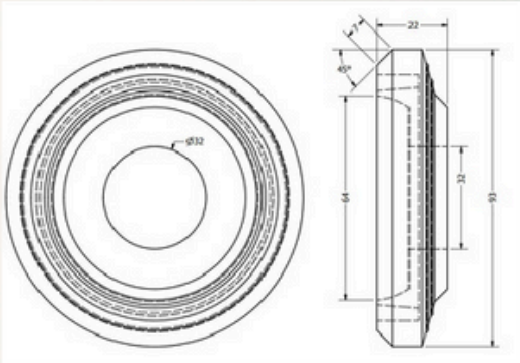

OK.3810

Rubber bumper for round tube Ø 38mm

-material - rubber
-colour - grey
-external diameter - 143mm
-pipe hole - 38 mm

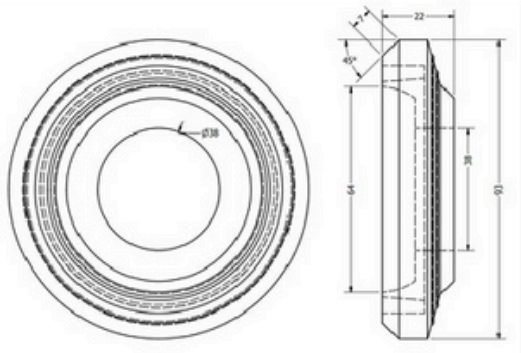

Iwo Group s.r.o
Areál Impera Park–Hovorčovice
Hlavní 828, 25064Hovorčovice
Czech Republic

phone: +420 602 558 254
email: sales@iwogroup.eu
www.iwogroup.eu

OK.2020

Rubber bumper for square tube 20x20mm

-material - rubber -colour - grey -external diameter = 143mm -square hole = 20x20mm

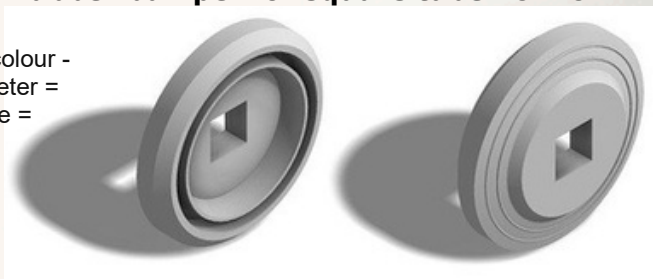

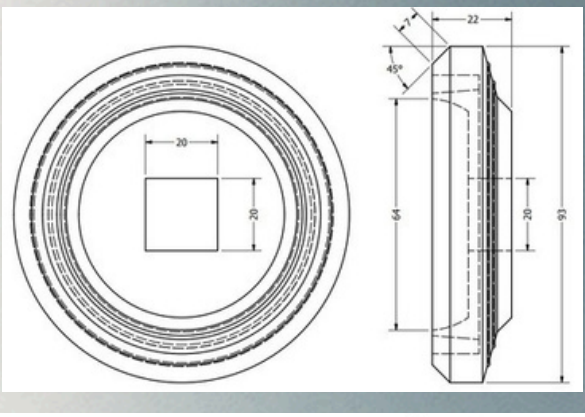

OK.2525

Rubber bumper for square tube 25x25mm

-material - rubber
-colour - grey
-external diameter - 143mm
-square hole - 25x25mm

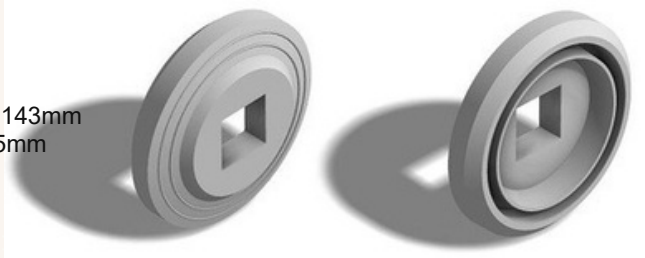

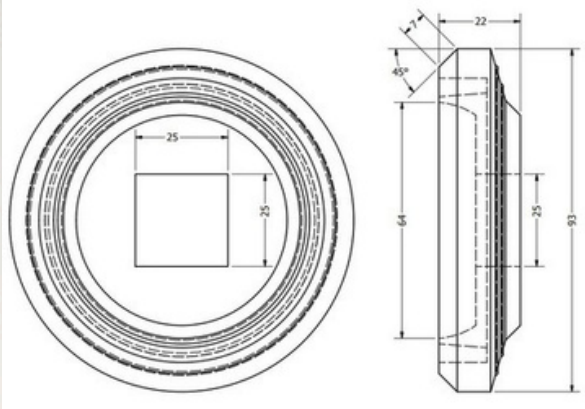

OK.3030

Rubber bumper for square tube 30x30mm

-material - rubber
-colour - grey
-external diameter - 143mm
-square hole - 30x30mm

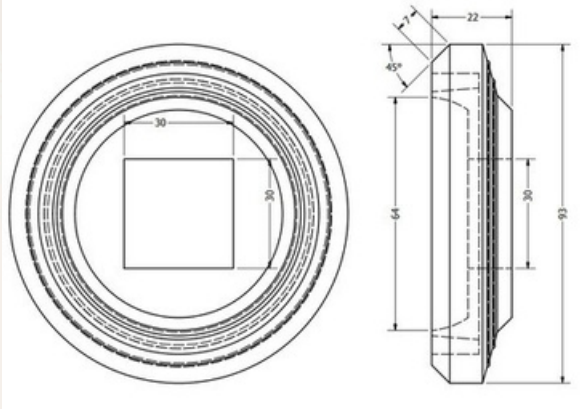

OK.4040

Rubber bumper for square tube 40x40mm

-material - rubber
-colour - grey
-external diameter - 143mm
-square hole - 40x40mm

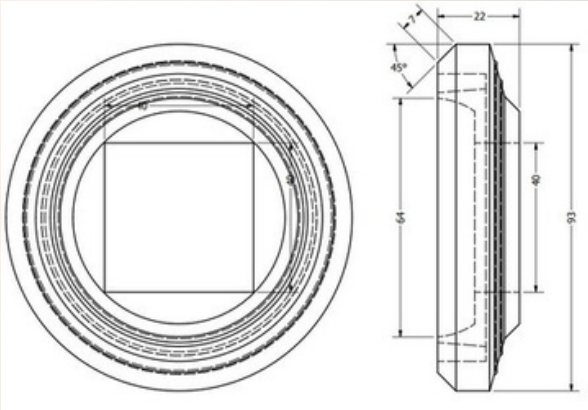

Iwo Group s.r.o
Areál Impera Park–Hovorčovice
Hlavní 828, 25064Hovorčovice
Czech Republic

phone: +420 602 558 254
email: sales@iwogroup.eu
www.iwogroup.eu

OK.1091 **Rubber corner protector**

-material - rubber
-colour – grey
-resistant to the environment, chemically and water resistant

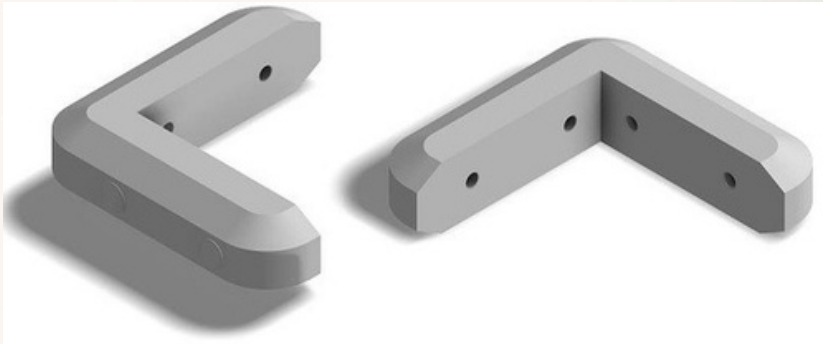

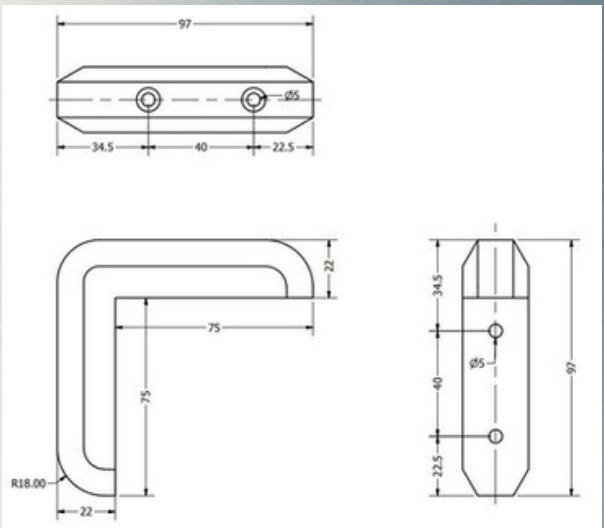

OK.25 **Adjustable feet**

- material: polypropylene
- load capacity: 150 kg
- setting range: 7,4 - 55 mm
- color options - Gray + Black

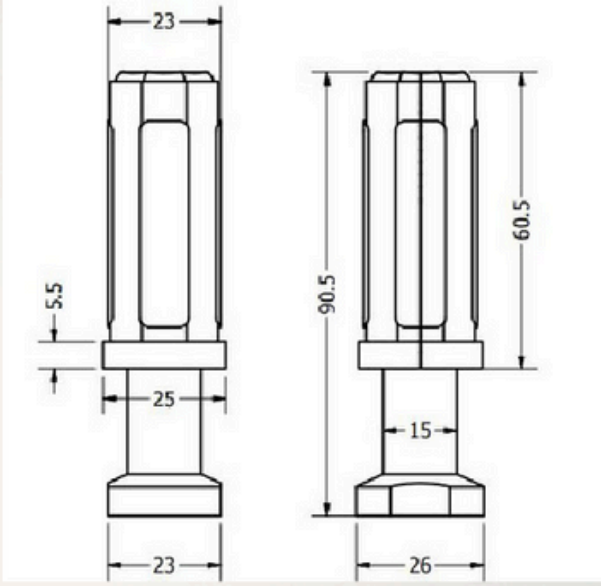

OK.30 **Adjustable feet**

- material: polypropylene
- load capacity: 250 kg
- setting range: 17,2 - 45,5 mm
- color options - Gray + Black

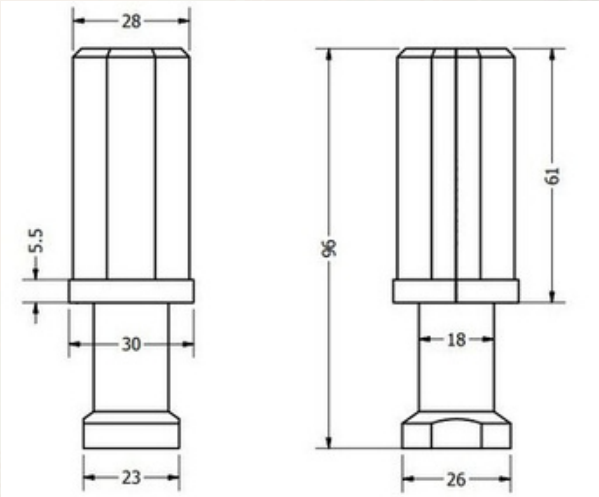

Iwo Group s.r.o
Areál Impera Park–Hovorčovice
Hlavní 828, 25064Hovorčovice
Czech Republic

phone: +420 602 558 254
email: sales@iwogroup.eu
www.iwogroup.eu

OK.35

Adjustable feet

- material: polypropylene
- load capacity: 400 kg
- setting range: 8,1 - 54,5 mm
- color options - Gray + Black

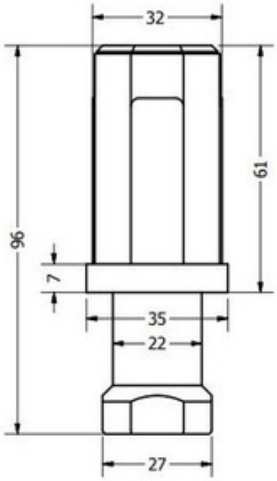

OK.40

Adjustable feet

- material: polypropylene
- load capacity: 250 kg
- setting range: 20,3 - 51,7 mm
- color options - Gray + Black

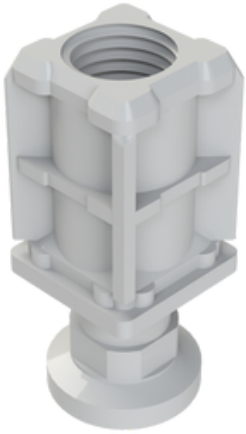

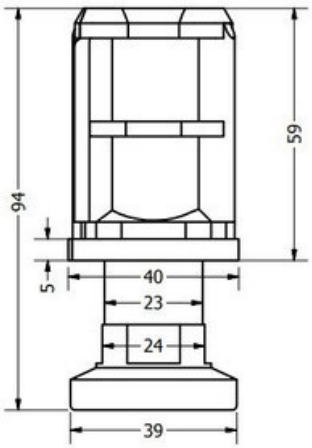

OK.50

Adjustable feet

- material: polyamide
- load capacity: 450 kg
- setting range: 20,8 - 51,8 mm
- color options - Gray + Black

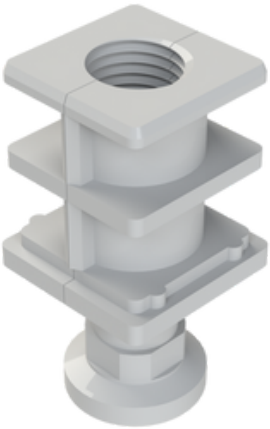

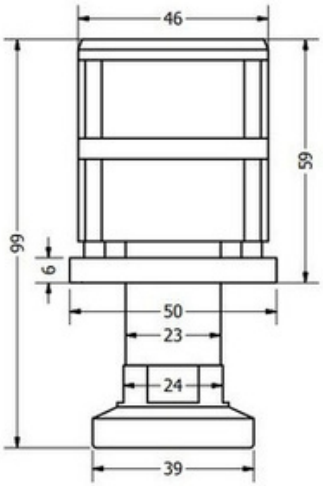

Iwo Group s.r.o
Areál Impera Park–Hovorčovice
Hlavní 828, 25064Hovorčovice
Czech Republic

phone: +420 602 558 254
email: sales@iwogroup.eu
www.iwogroup.eu

OK.38

Adjustable feet

- material: polypropylene
- load capacity: 250 kg
- setting range: 8,8 - 56,6 mm
- color options - Gray + Black

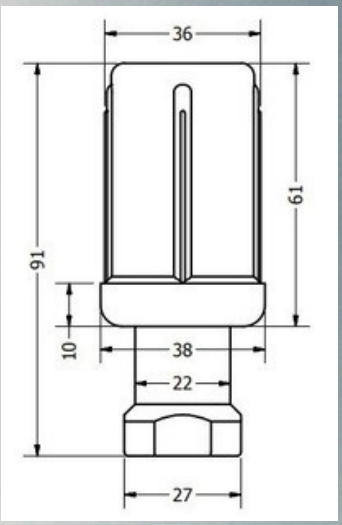

OK.100

Adjustable feet

- material: polypropylene
- load capacity: 1000 kg
- setting range: 134,6 - 168 mm
- color options - Gray + Black

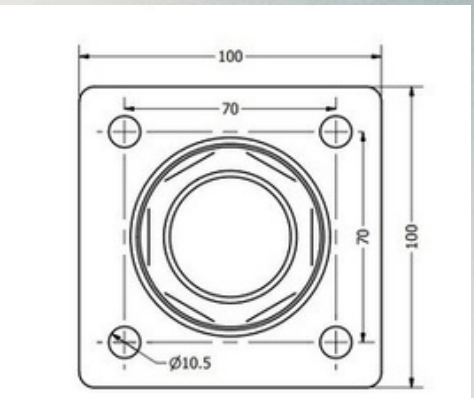

OK.CF

Adjustable feet

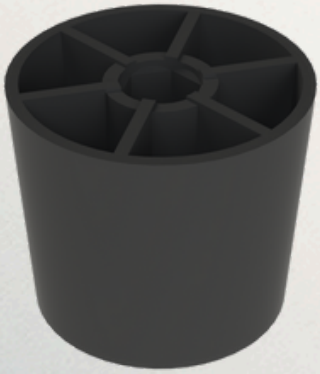

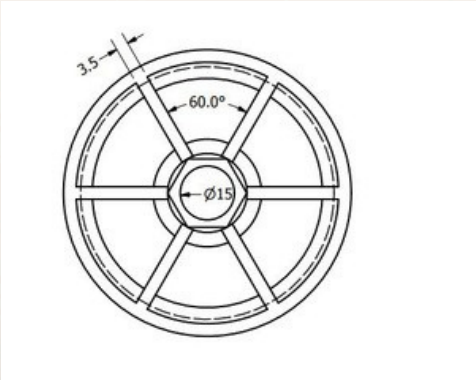

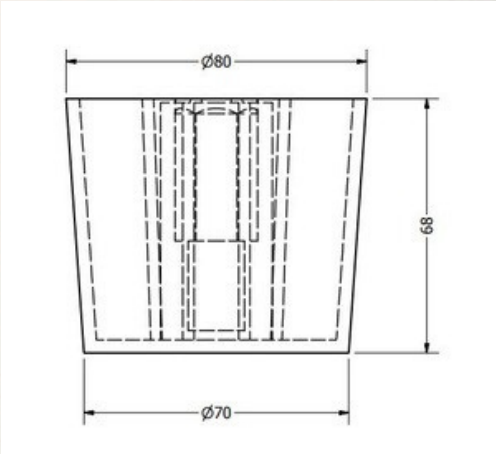

- material: polypropylene
- load capacity: 250 kg
- setting range: height adjustable by the height of the mounted screw
- color options - Black

Iwo Group s.r.o
Areál Impera Park–Hovorčovice
Hlavní 828, 25064Hovorčovice
Czech Republic

phone: +420 602 558 254
email: sales@iwogroup.eu
www.iwogroup.eu

OK.UF

Handle holder

- material: polyamide
- color options - Gray

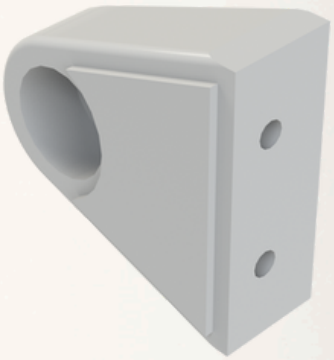

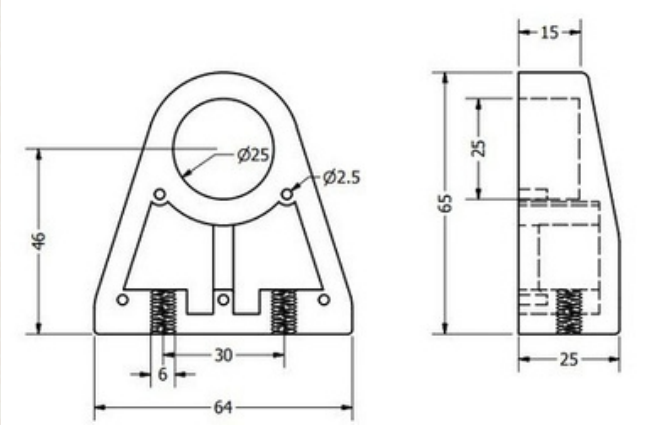

OK.UR

Fryer handle

- material: polyamide
- color options - Black

C65-

Belt bumper with aluminum base

- material: PVC bumper + aluminium base - color - Gray - Length versions: C65-2072 - 1829mm C65-2120 - 3070mm

Iwo Group s.r.o
Areál Impera Park–Hovorčovice
Hlavní 828, 25064Hovorčovice
Czech Republic

phone: +420 602 558 254
email: sales@iwogroup.eu
www.iwogroup.eu