drawn on the left (mirrored on the right)

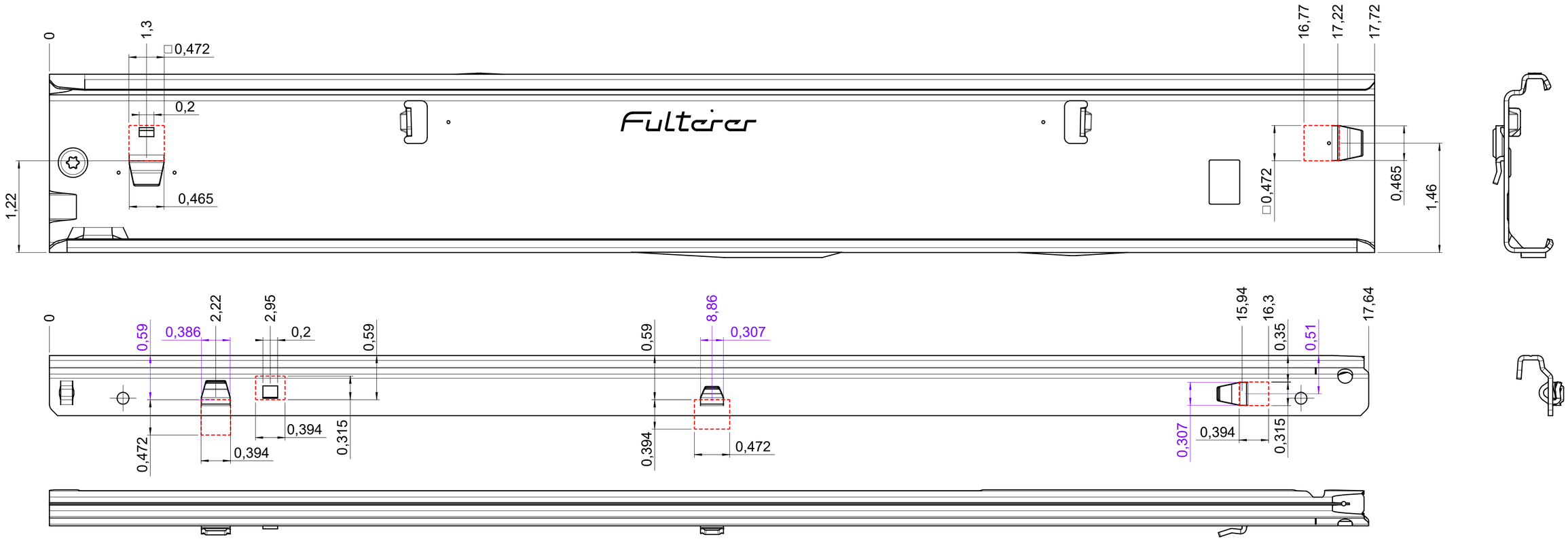

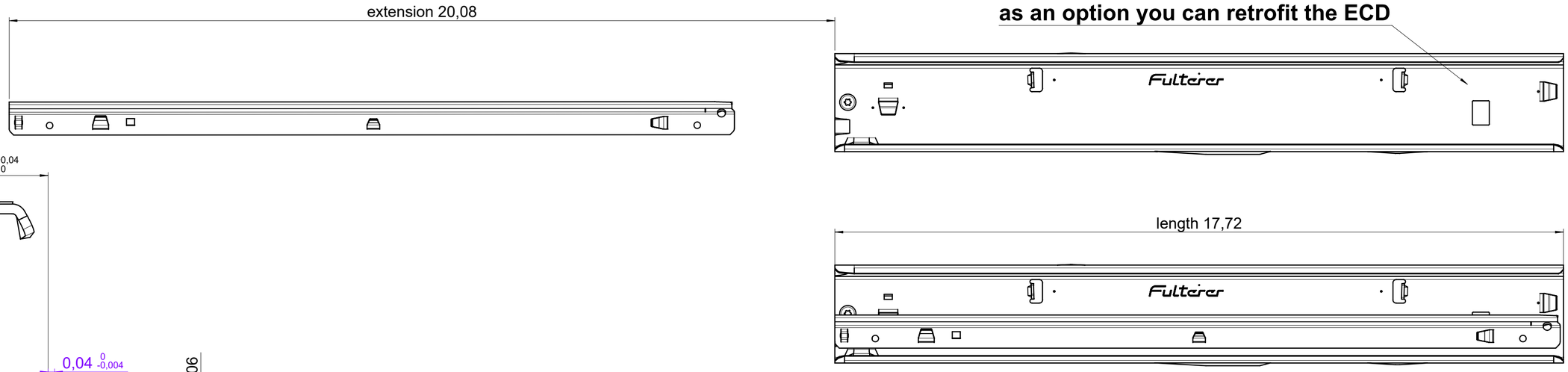

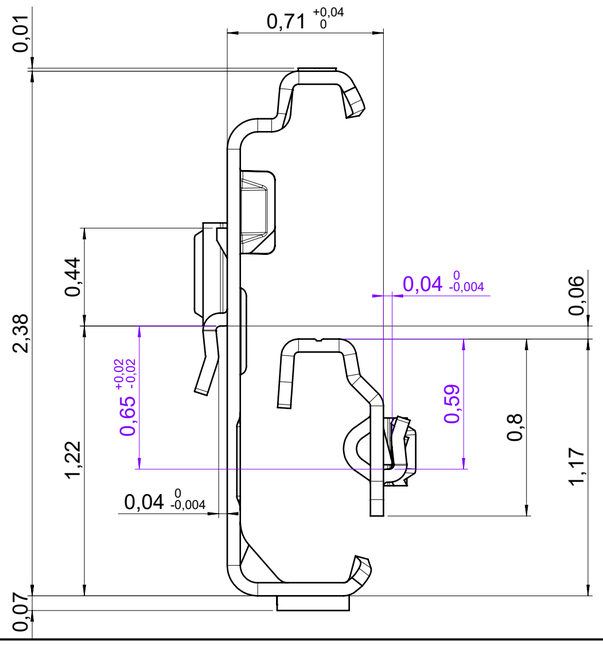

final approval	
	customer name:
	signed by:
	date:

all dimensions in inch

missing dimensions see 3D
= theor. intersection

DIN ISO 128-30

scale: 1:1

surface/color:

material: (technical requirements Fulterer)
CS

prototype approval

	date	name
drawn	2024-03-19	RK
proven	2024-04-10	RK

description:
FR 795-450 CS EN (inch)
progressive-action over-extension drawerslide / side mount

Fulterer
Fulterer AG & Co KG
A-6890 Lustenau
Fulterer AG
CH-9430 St. Margrethen

drawing number:
CS# 795.450-GA.L538

ind.	changes	date	name

replaces the edition:

A2

This drawing remains our property and may not be multiplied neither be disclosed to third parties (§§1,3 and 5 from the copyright Act (UrhG)).

covered according to DIN ISO 16016