Ocean 9 - Three Doors - Mounting Instruction

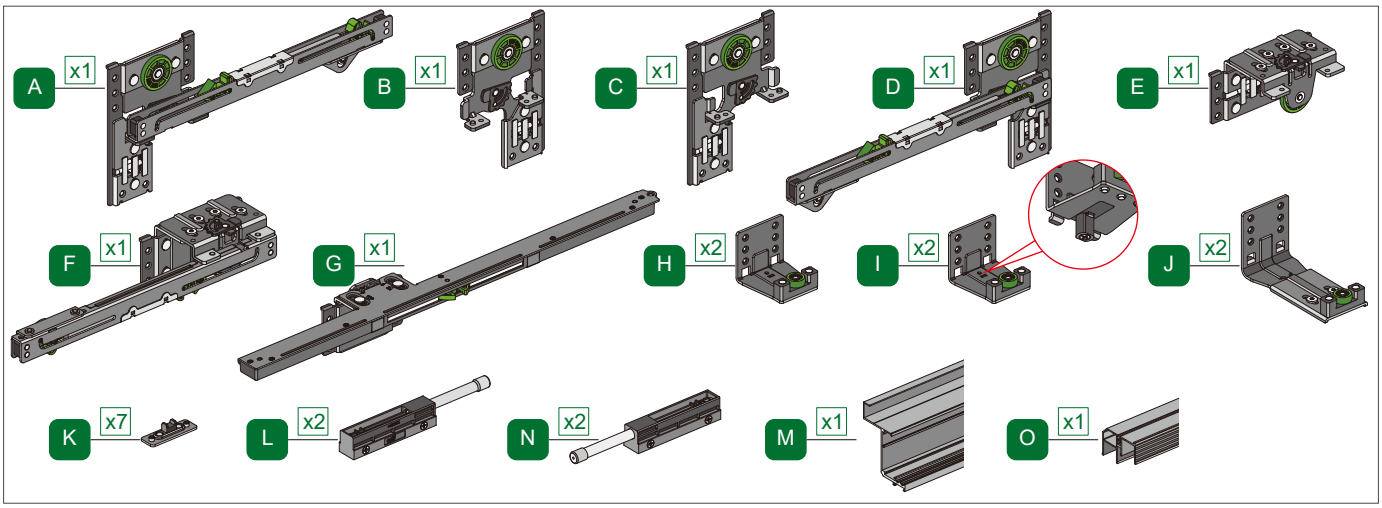

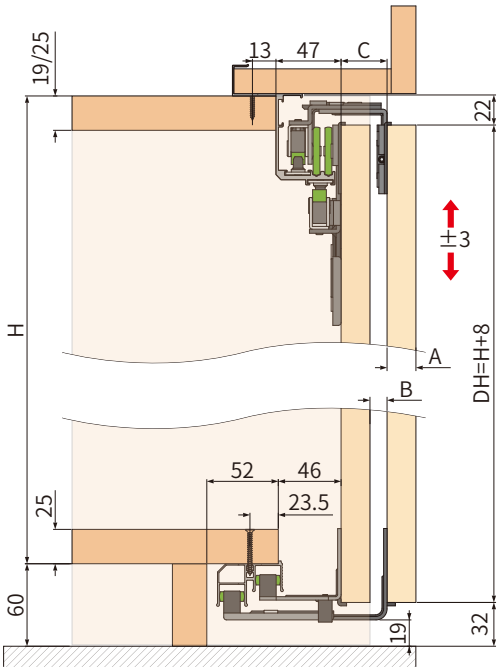

A	B	C
16	13	29
18	11	29
19	10	29
21	13	34
22	12	34
25	13	38
30	13	43

Door weight
50kg

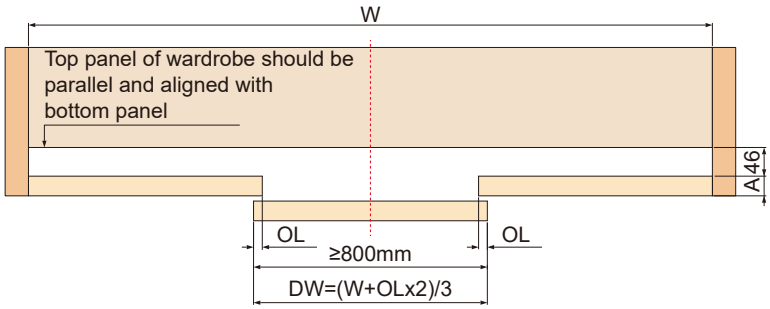

Screws position on the back of the door

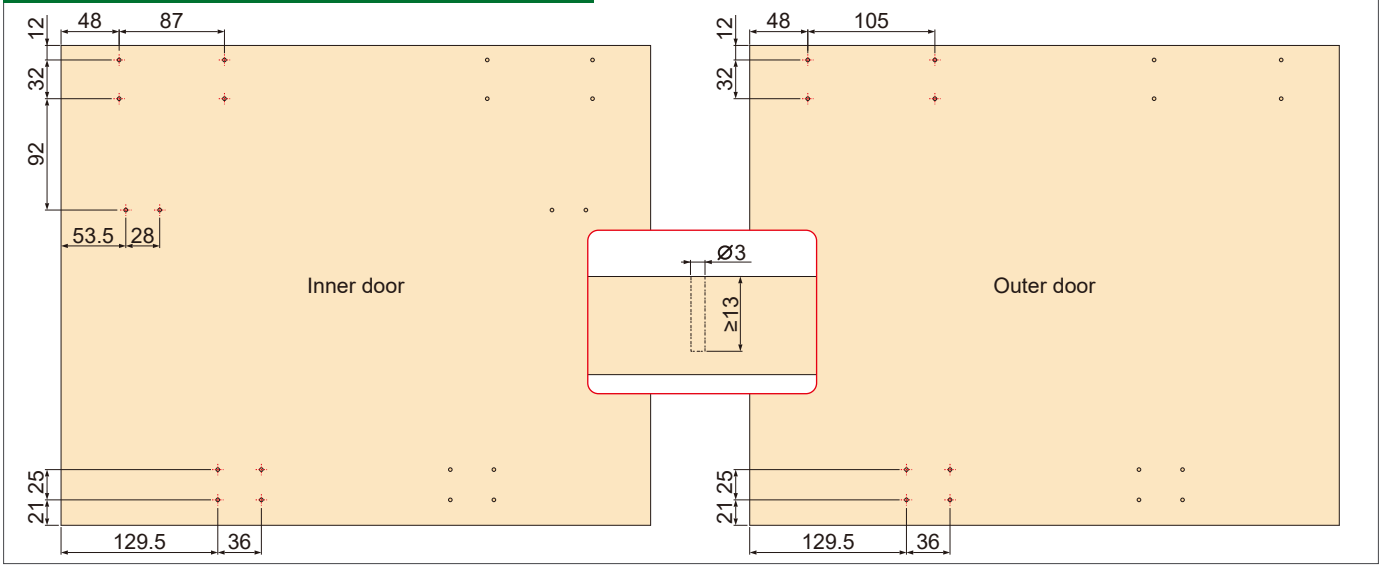

2025.12.20

1 Install accessories on the door

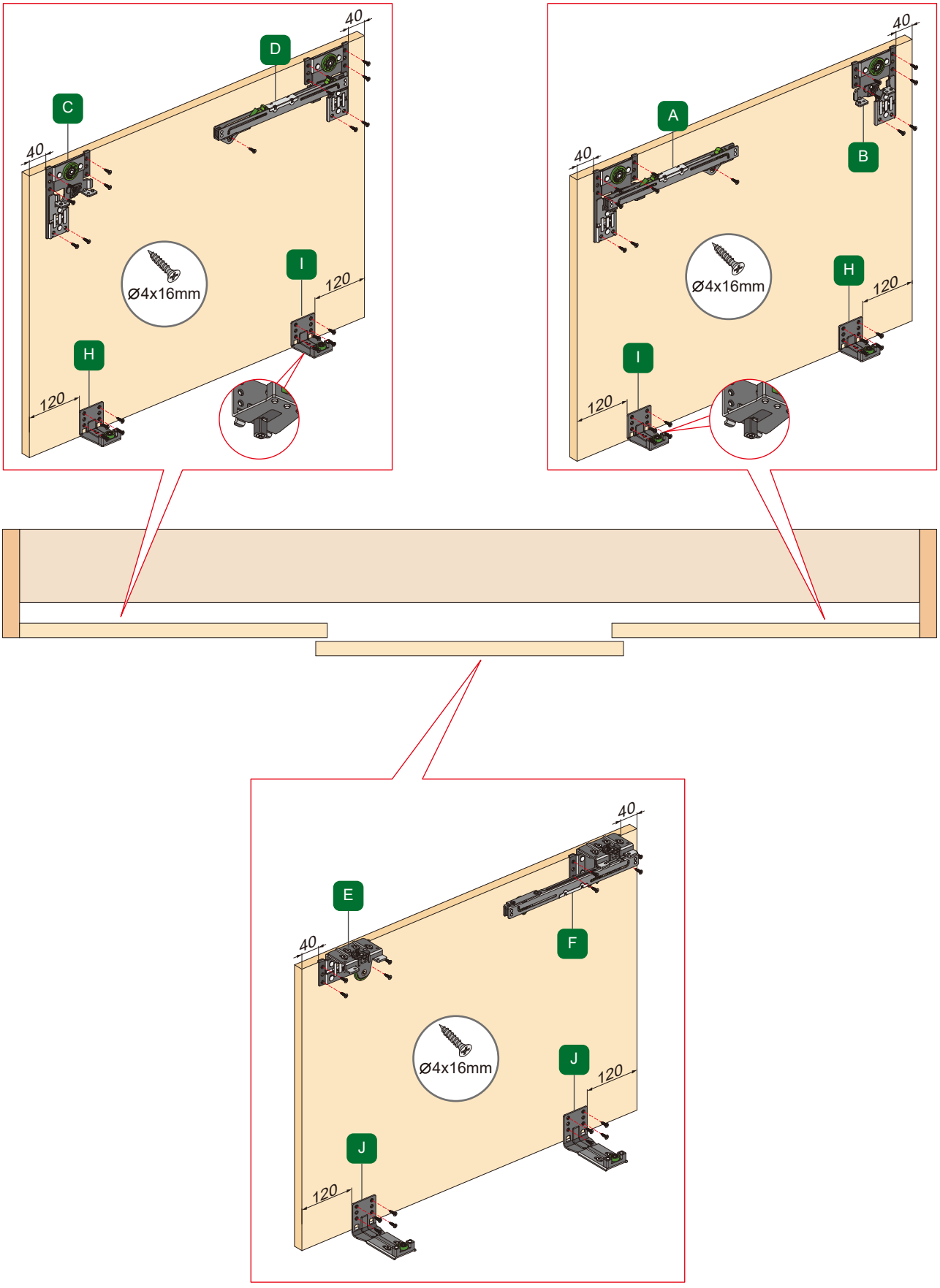

2-1 Adjust outer door accessories

Adjust the door thickness

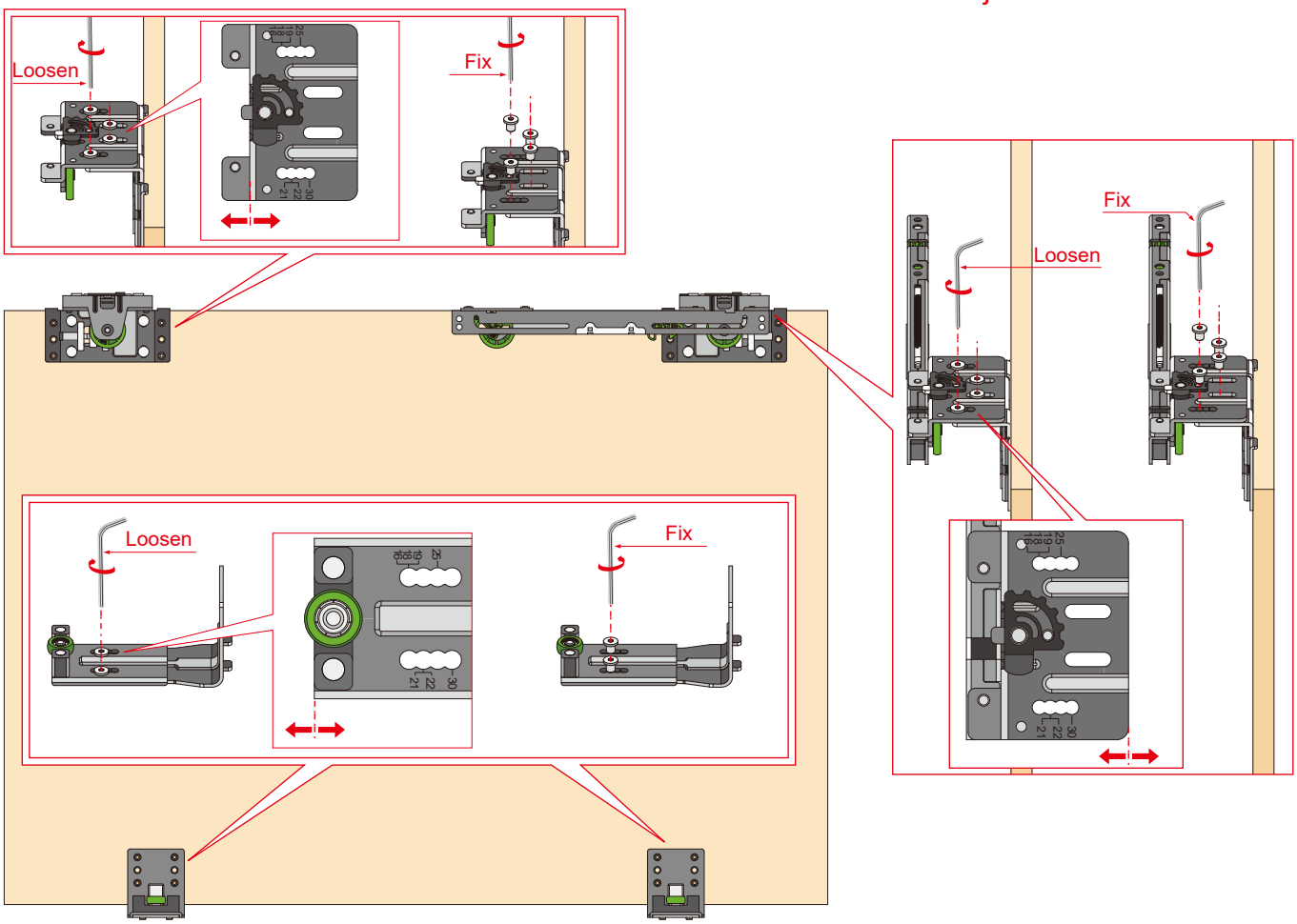

2-2 Install Two-way damper for outer door

Adjust the door thickness

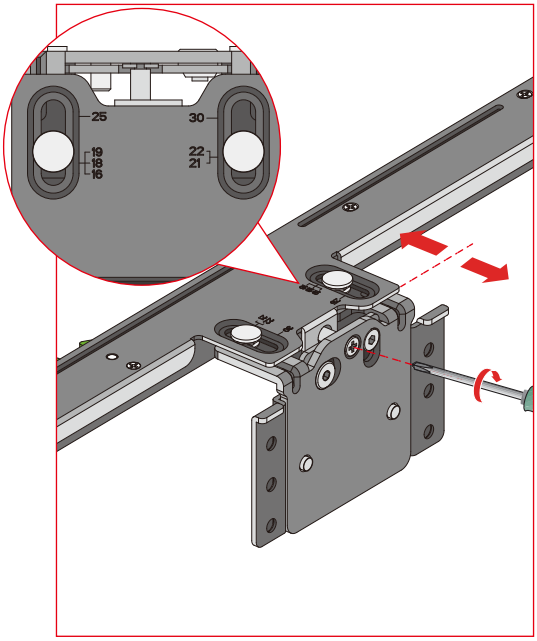

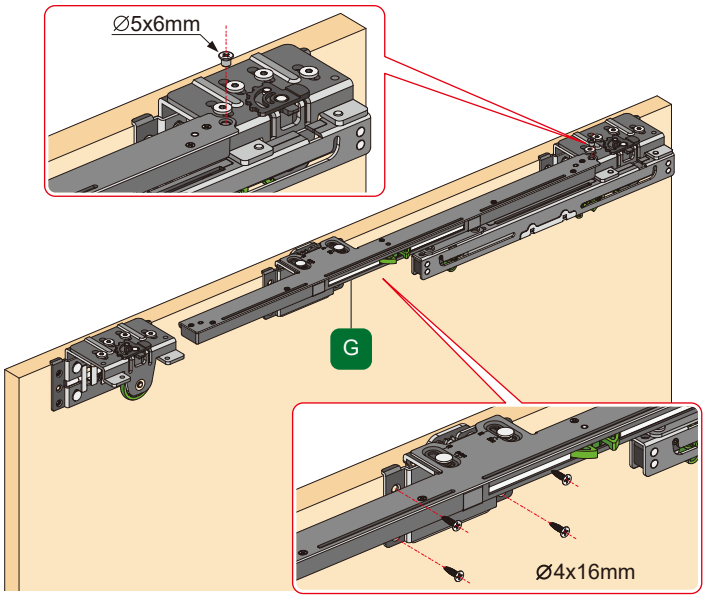

3 Install accessories and tracks

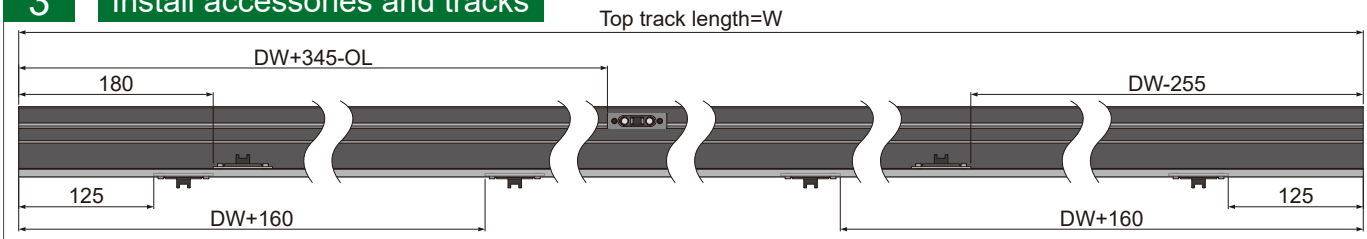

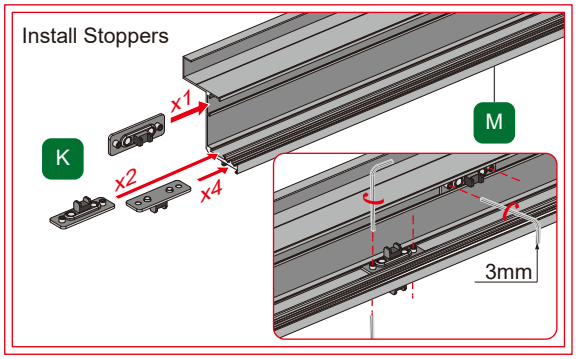

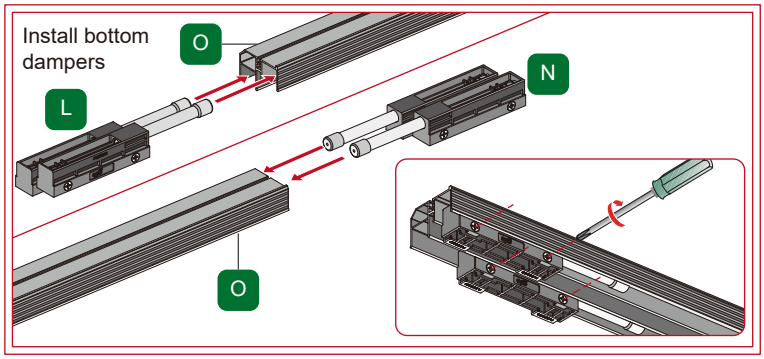

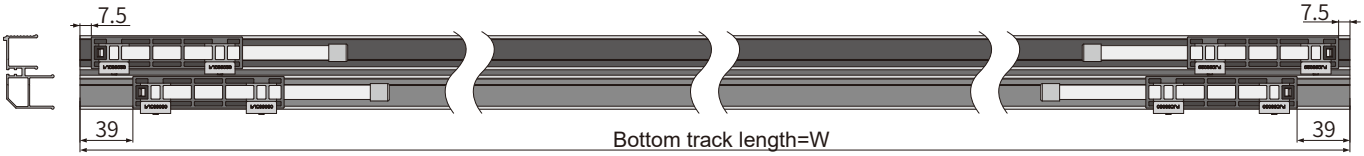

4 Install tracks

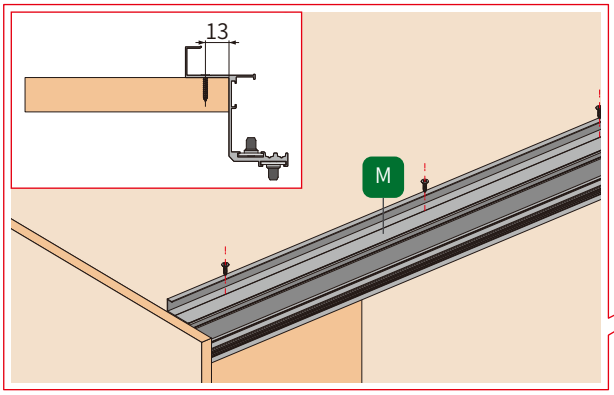

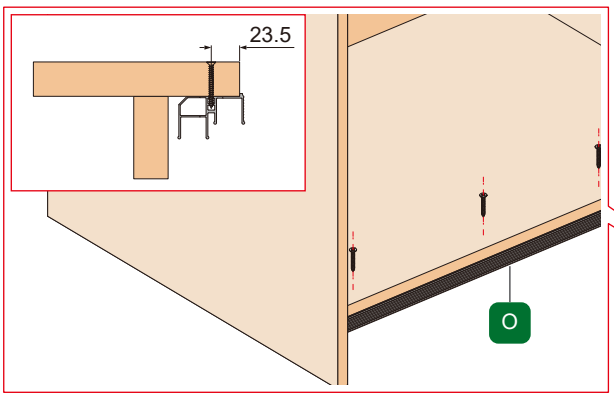

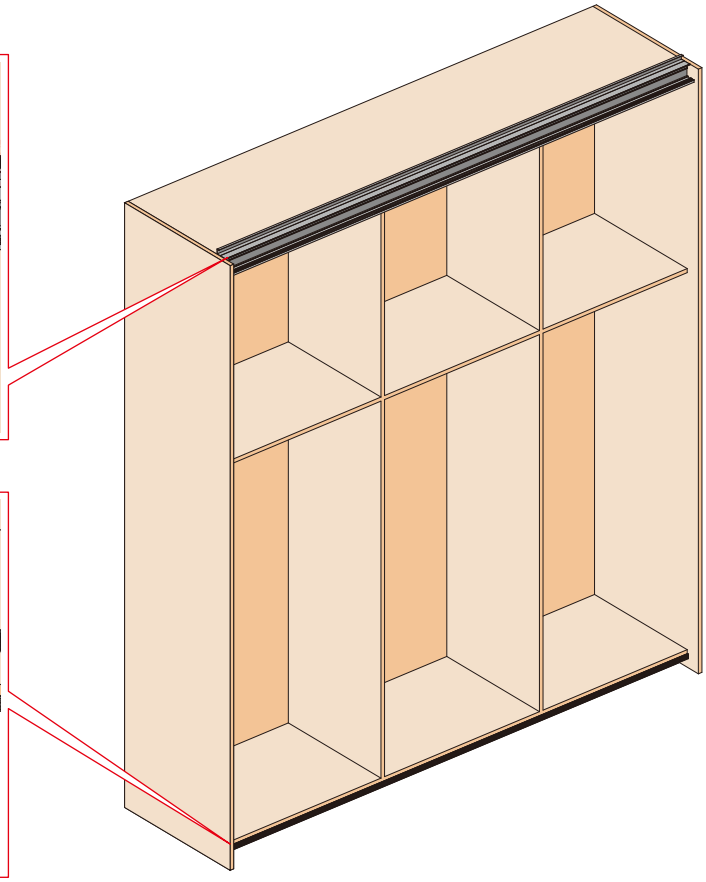

5 Install door

Install inner door

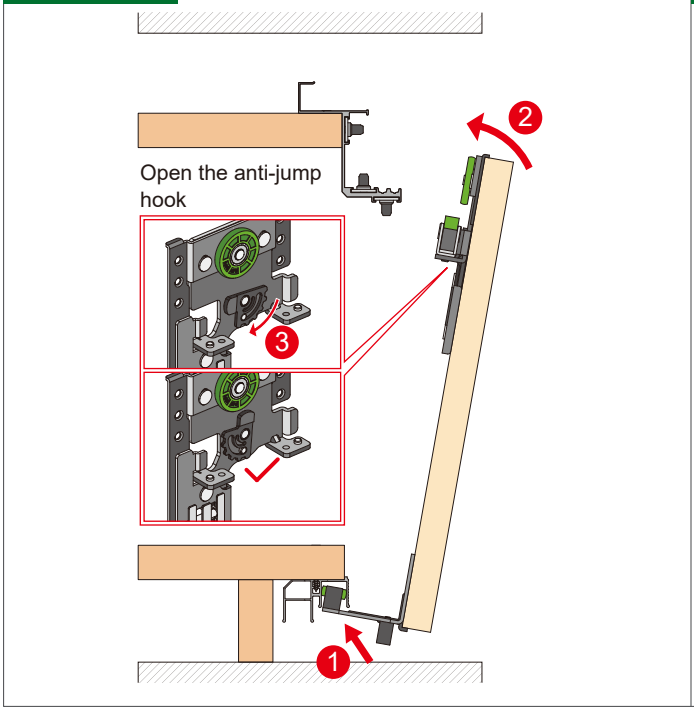

Install outer door

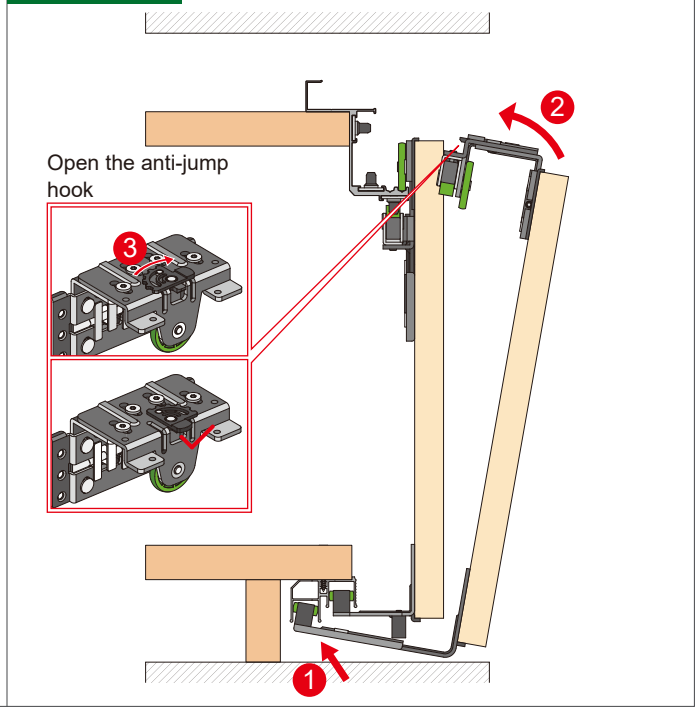
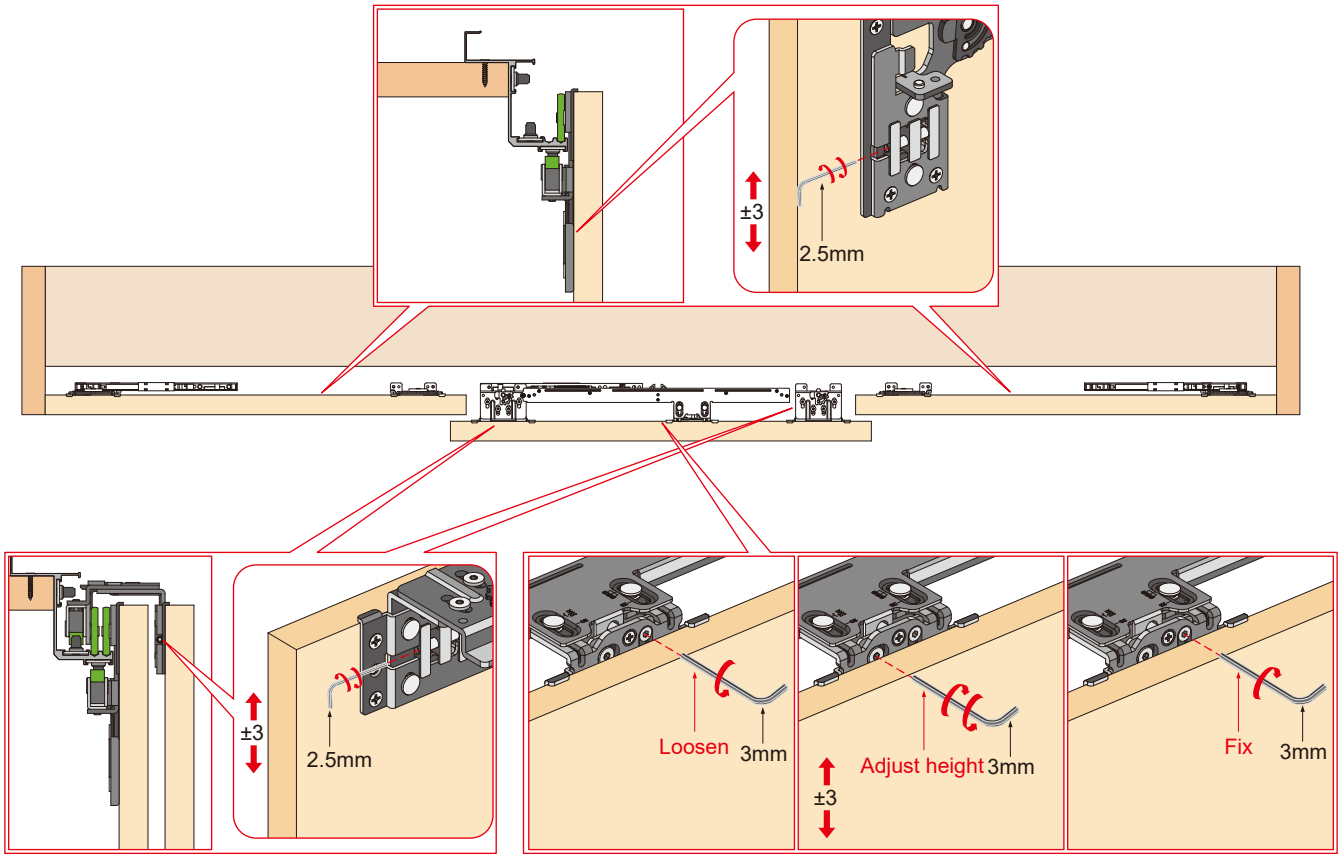
6 Adjust the door balance