FR 2021

SLIDE TYPE:	**Regular-Extension Drawer Slide**
MOUNTING:	Bottom Mount

WIDTH:	**12 mm**
LOAD CAPACITY:	dynamic up to **35 kg**

MATERIAL:	steel, white powder coated

FEATURES:	solid delrin* rollers

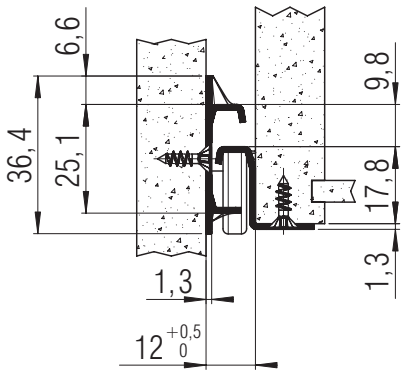

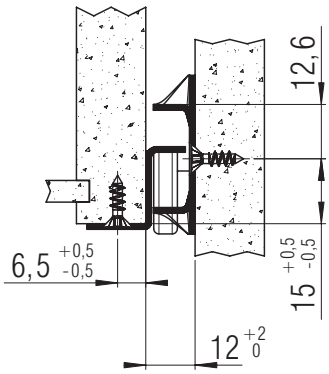

SPECIFICATIONS & NOTES:

- lateral stability provided by specially shaped profiles
- integrated side adjustment - clearance adjustable up to 2 mm
- double hole system on cabinet profile for offset attachment to thin inside walls
- added strength of cabinet profile provided by special front flange
- oblong holes in the cabinet profile permit easy height adjustments
- dual detent in the drawer profile holds the drawer in place when extended
- single-sided captive profile (left)
- self-closing

ⓘ compatible with full-extension drawer slide FR 6500 in the 32 mm system

*DuPont (TM) Delrin®

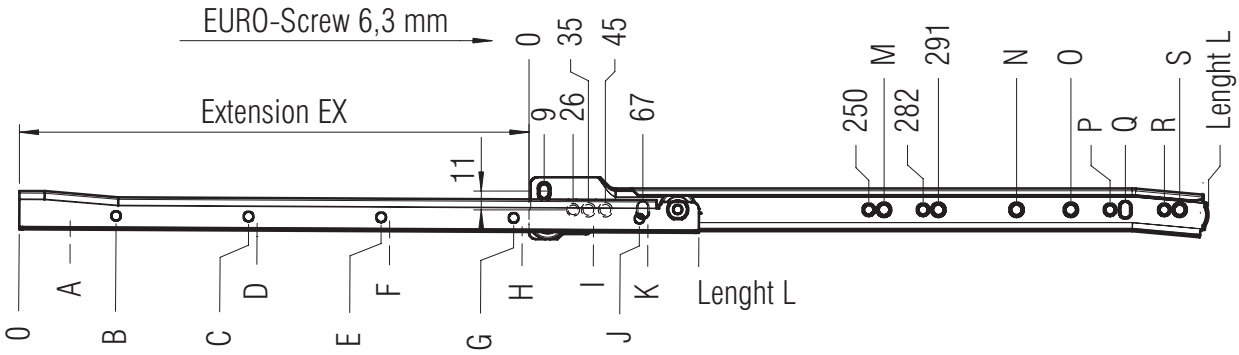

screw holes for 3,5 mm spax screws / 6,3 mm EURO screws

L mm	EX mm	A mm	B mm	C mm	D mm	E mm	F mm	G mm	H mm	I mm	J mm	K mm	M mm	N mm	O mm	P mm	Q mm	R mm	S mm	Weight per pair (kg)	Order No. white
300	215	46	73	137	142					238	265	270					259			0,55	▸ **7065**
350	265	32	91	187	192					288	315	320		323			259			0,63	▸ **7066**
400	300	18	77	173		237	242			338	365	370	259	355		378	387			0,71	▸ **7067**
450	350	36	95	159		287	292			388	415	420	259	387		410	419	442		0,79	▸ **7068**
500	400	22	81	113	118	337	342			438	465	470	259	387	419	442	451	474	483	0,87	▸ **7069**
550	430	40	99	163	168	387	392			488	515	520	259	483		506	515	538		0,96	▸ **7070**
600	480	26	85	213	218	437	442			538	565	570	259			506	515	538	547	1,04	▸ **7071**
650	530	44	71	135		263	268	487	492	588	615	620	259			506	515	538	547	1,13	▸ **7072**
700	560	30	89	185	190	313	318	537	542	638	665	670	259			506	515	538	547	1,21	▸ **7082**

Packing Unit: **20 sets per box** ▸ **prompt delivery**

Fulterer