WITH PROHIBITION TO REPRODUCE OR TO TRANSMIT IT WITHOUT ITS AUTHORISATION

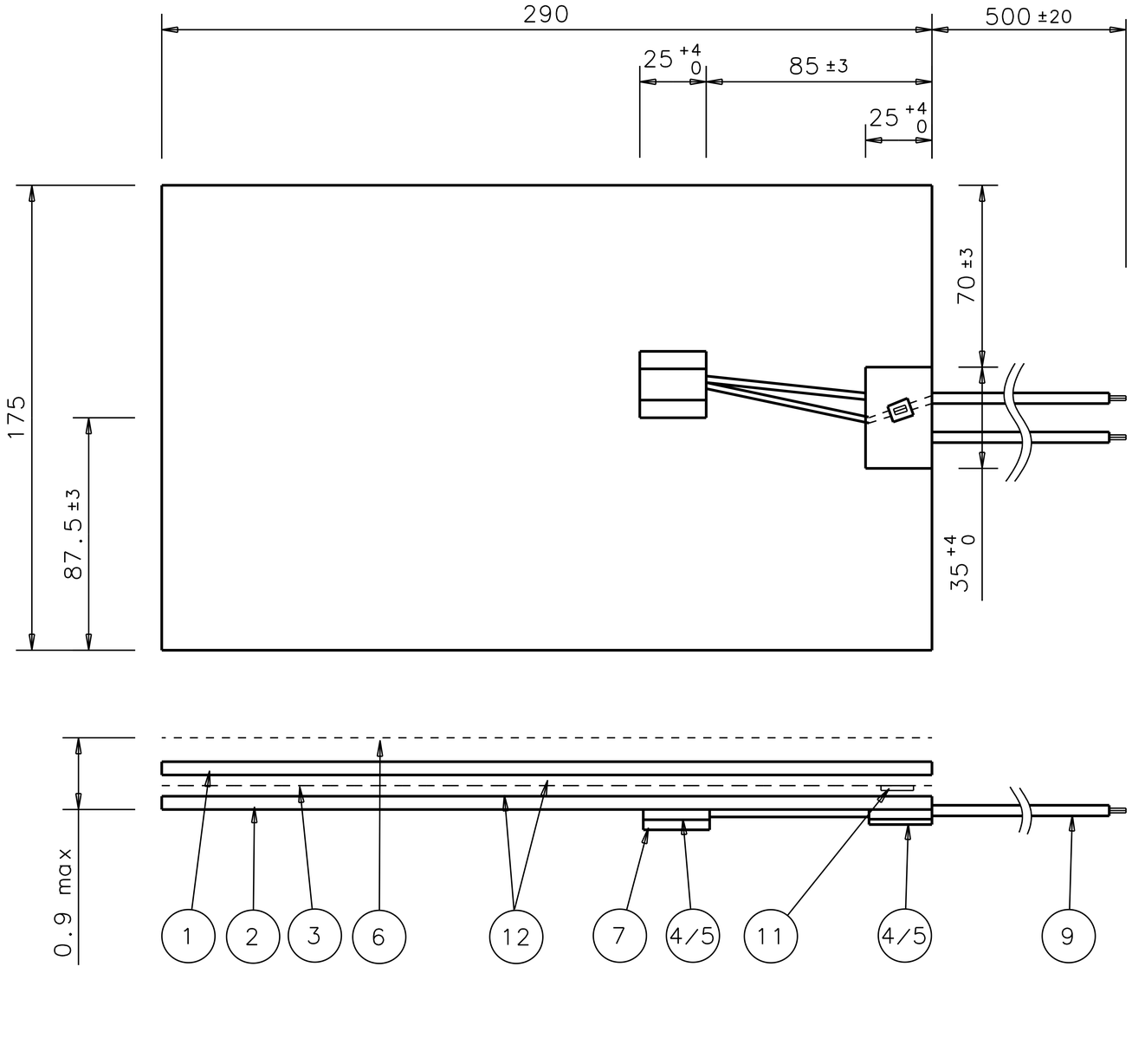

MAX TEMPERATURA DI UTILIZZO 175°C

IN ACCORDO CON EN 60335-1

MAX WORKING TEMPERATURE 175°C

ACCORDING TO EN 60335-1

CONNECTIONS DETAIL
DETTAGLIO CONNESSIONI

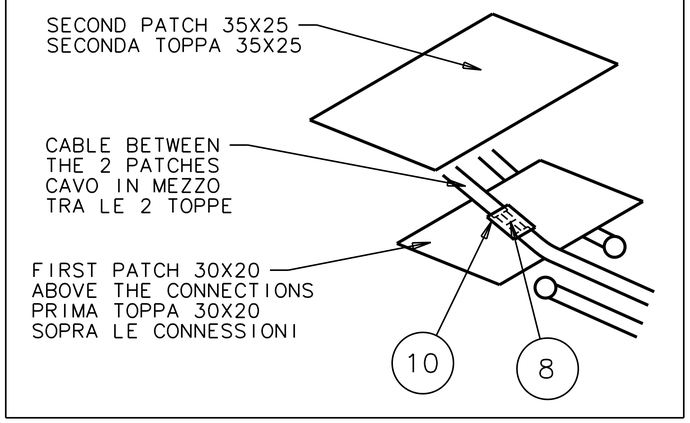

RIF	DENOMINAZIONE	UM	QTA	CODICE
12	PRIMER CHEMOSIL 511	g	0.460	570149250
11	STAGNO ALUSOL LEAD FREE SN97/CU3	g	0.540	571134200
10	GUAINA FVS D.I. 2	m	0.010	550705050
9	CAVO 1P IN CU-SN SILICONE ARANCIO SEZ.0.75	m	1.040	570143320
8	PUNTAL. A304 0.5-1.5 L5 ROT	NR	1.000	570630170
7	TERMOSTATO UCHIYA U12 140~C	NR	1.000	570979960
6	BIADESIVO NITTO 5015TP H=610	MQ	0.057	571056050
5	SIL NONSUPP NONVULC SP=0.635MM	MQ	0.001	570147950
4	SILICONE SUC SP=0.38MM H=610MM	MQ	0.001	570147901
3	LAMINA 0.02 OHM/SQ H=610MM	MQ	0.057	570147801A
2	SILICONE SUC SP=0.38MM H=610MM	MQ	0.057	570147901
1	SILICONE SUC SP=0.38MM H=610MM	MQ	0.057	570147901

Ica div. RCA

DATE	DRAWN	APPROV.
30-5 -20	GRRC	SCRM

dd-mm-yy

DO NOT SCALE / NON SCALARE

IF IN DOUBT ASK
IN CASO DI DUBBI CHIEDERE

1ST ANGLE PROJECTION

GENERAL TOLERANCES/TOLLERANZE GENERALI
UNLESS OTHERWISE STATED/SE NON DIVERSAMENTE INDICATO
ALL QUOTES ARE IN MM/TUTTE LE QUOTE SONO IN MM

Dimension/ Dimension From/Da	To / A	Body Elemento	Wires/Sheath Cavi/Guaine	Stripping Spelatura
0	100	±1	±10	±2
101	500	±2	±20	N/A
501	1000	±3	±30	N/A
1001	>	±5	±5%	N/A

DENOMINAZIONE
ETCHED FOIL

Codice Rica
1EFICA995003

Scala
/

CLIENTE RICA - ASSIEMI SBU G -

REV	DATA_APPROV_CONTR	DESCRIZIONE
001	200103 GRRC SCRM	MODIFICA
002	220103 GRRC SCRM	MODIFICA
003	300812 dmlc buni	Aggiunto doppia toppa+aggiornato distinta
004	110714 vsls frni	agg. disegno

COPIE PER

02	V.O.U.	03	PRODUZIONE 1	09	UFF. VTE	10	CLIENTE	11	CL. APPROV.		
12	AGENTE										

	220	500 +5%,-10%	1.10	RICA DATA ODL 220V 500W	.
Codice cliente	Volt	Watt	W/cm2	Marcatura	

ZOPPAS INDUSTRIES - RICA DIVISION OF IRCA SpA RESERVES THE PROPERTY OF THIS DOCUMENT
THIS DRAWING IS TO BE CONSIDERED AN INTEGRAL PART OF THE RELATIVE PRODUCT TECHNICAL DATA SHEET
FORMATO ORIGINALE:420*297
ZOPPAS INDUSTRIES - RICA DIVISION OF IRCA SpA RESERVES THE PROPERTY OF THIS DOCUMENT
WITH PROHIBITION TO REPRODUCE OR TO TRANSMIT IT WITHOUT ITS AUTHORISATION

Stampato il :11-07-2014