drawn on the left (mirrored on the right)

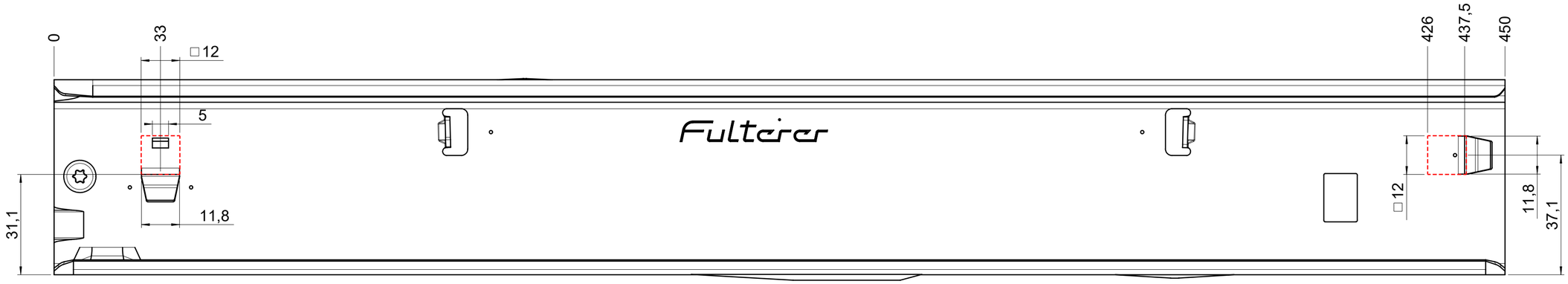

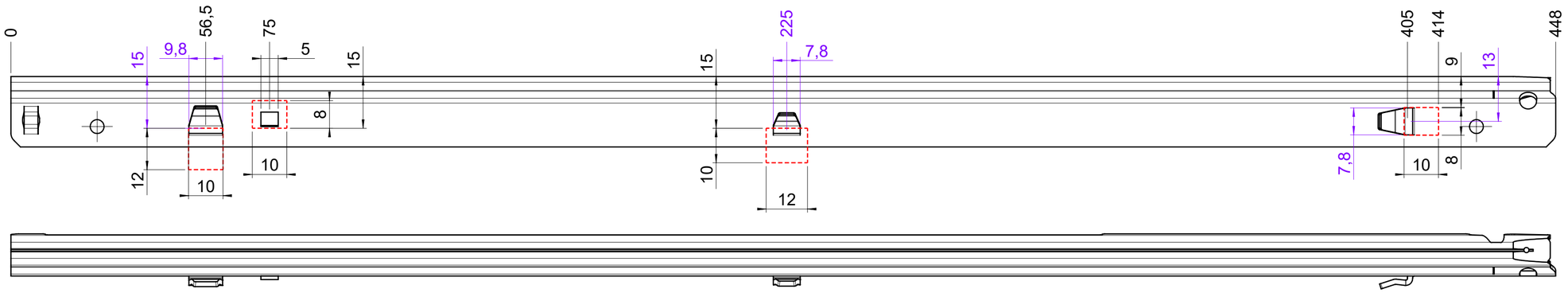

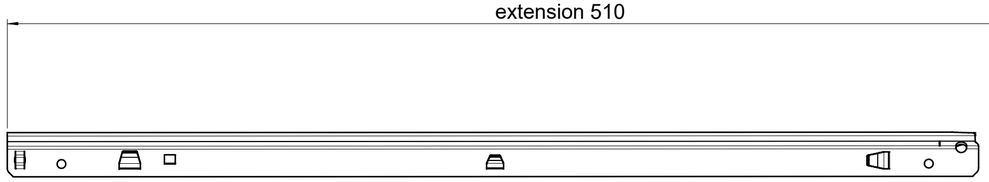

as an option you can retrofit the ECD

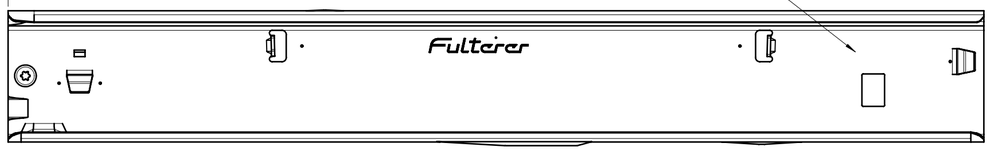

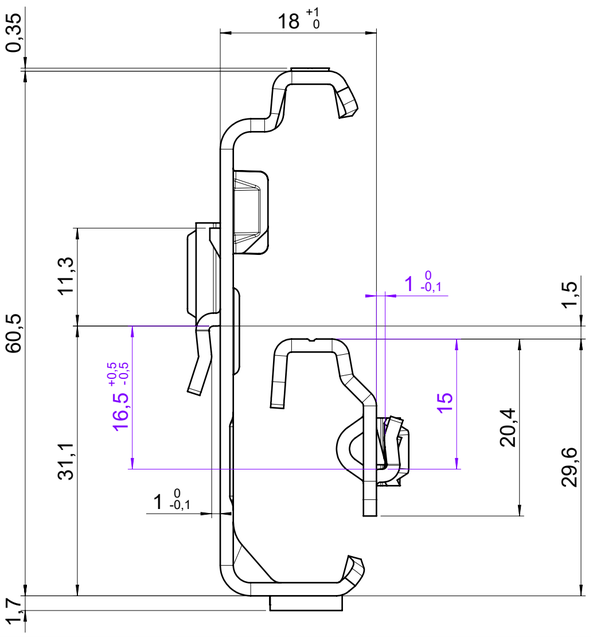

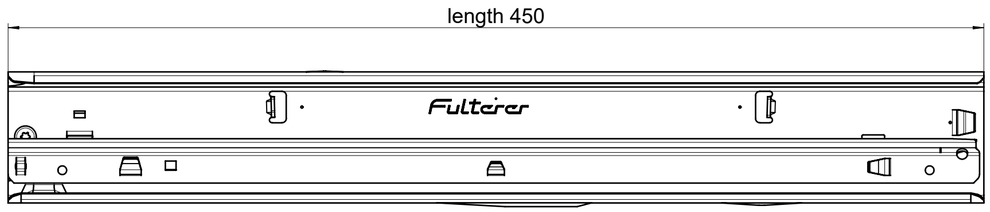

final approval	
	customer name:
	signed by:
	date:

all dimensions in mm

missing dimensions see 3D = theor. intersection	DIN ISO 128-30	scale: 1:1	surface/color:
material: (technical requirements Fulterer) CS			
prototype approval			
	date	name	
drawn	2024-03-19	RK	
proven	2024-04-10	RK	
ind.	changes	date	name

Fulterer AG & Co KG
A-6890 Lustenau
Fulterer AG
CH-9430 St. Margrethen

description:
FR 795-450 CS EN (mm)
progressive-action over-extension drawerslide / side mount

drawing number:
CS# 795.450-GA.L538

replaces the edition:

A2

This drawing remains our property and may not be multiplied neither be disclosed to third parties (§§1,3 and 5 from the copyright Act (UrhG)).

covered according to DIN ISO 16016