WITH PROHIBITION TO REPRODUCE OR TO TRANSMIT IT WITHOUT ITS AUTHORISATION

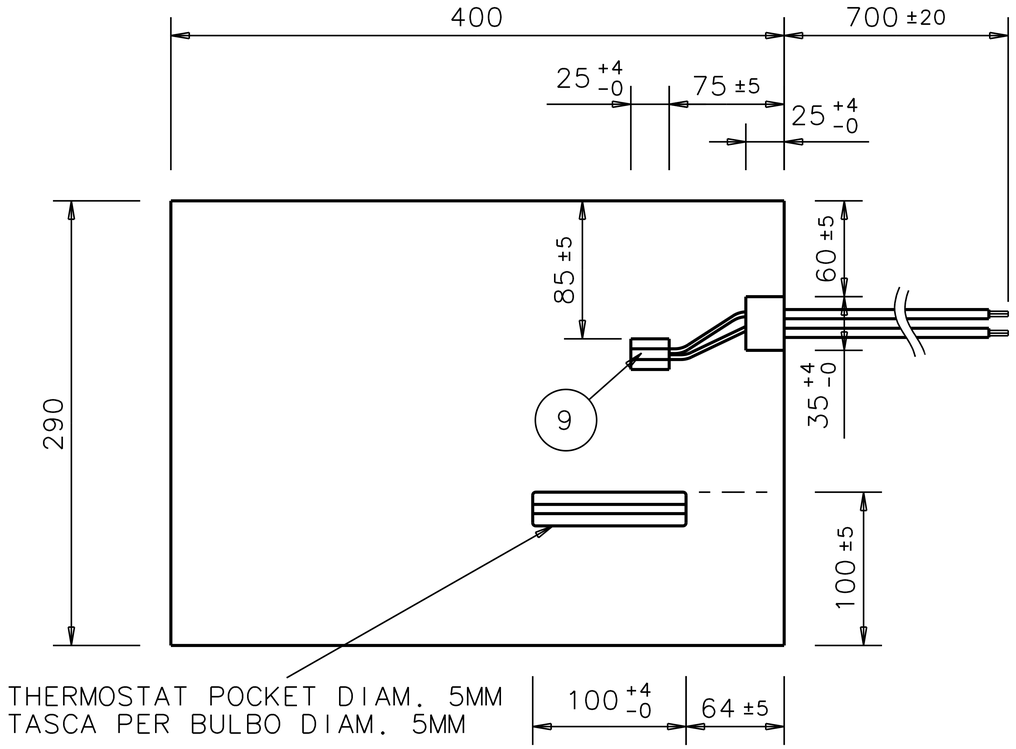

MAX WORKING TEMPERATURE 175 °C
MAX TEMPERATURA DI UTILIZZO 175°C

ACCORDING TO EN 60335-1
IN ACCORDO CON EN 60335-1

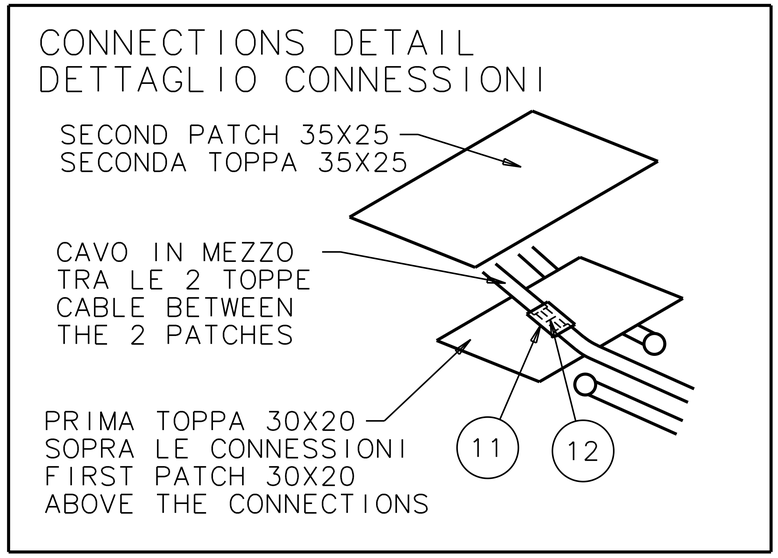

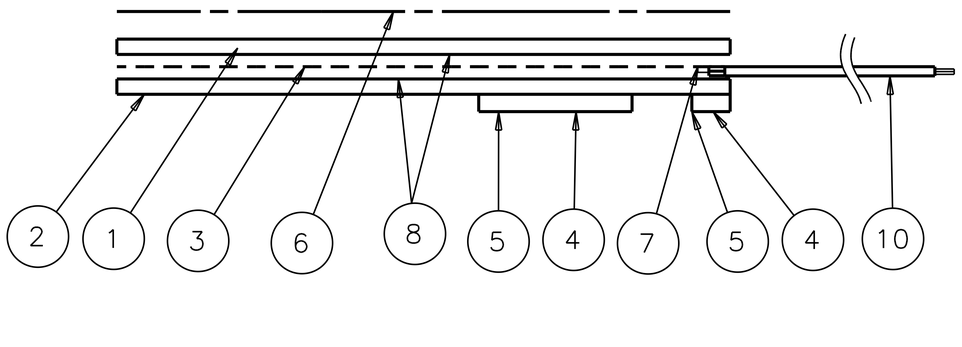

12	TERMINALE PER CRIMPATURA	NR	1.000	570630170
11	TERMORESTRINGENTE	m	0.010	571255830
10	CAVO SILICONE BIANCO 1mmq	m	1.440	570138850
9	TERMOSTATO @140°C	NR	1.000	570979960
8	PRIMER	g	1.025	570149250
7	STAGNO	g	0.540	571134200
6	ADESIVO	MQ	0.128	571056050
5	SILICONE	MQ	0.004	570147950
4	SILICONE	MQ	0.004	570147901
3	LAMINA	MQ	0.128	570147801A
2	SILICONE	MQ	0.128	570147901
1	SILICONE	MQ	0.128	570147901
RIF	DENOMINAZIONE	UM	QTA	CODICE

DATE	DRAWN	APPROV.	
05-02-13	dmlc	buni	
dd-mm-yy			

DO NOT SCALE / NON SCALARE

IF IN DOUBT ASK
IN CASO DI DUBBI CHIEDERE

1ST ANGLE PROJECTION

GENERAL TOLERANCES/TOLLERANZE GENERALI
UNLESS OTHERWISE STATED/SE NON DIVERSAMENTE INDICATO
ALL QUOTES ARE IN MM/TUTTE LE QUOTE SONO IN MM

Dimension/ Dimension From/Da	To / A	Body Elemento	Wires/Sheath Cavi/Guaine	Stripping Spelatura
0	100	±1	±10	±2
101	500	±2	±20	N/A
501	1000	±3	±30	N/A
1001	>	±5	±5%	N/A

DENOMINAZIONE
ETCHED FOIL

Codice Rica
1EFICK369005

Scala
/

CLIENTE RICA - ASSIEMI SBU G -

REV	DATA_APPROV_CONTR	DESCRIZIONE
001	140613 frni srln	camb. cliente+eliminato una tasca
002	230615 ppvc frni	cambiato lungh.cavi.Era 500mm

COPIE PER

02	V.O.U.	03	PRODUZIONE 1	09	UFF. VTE	10	CLIENTE	11	CL. APPROV.		
12	AGENTE										

	230	1000 +5%,-10%	0.86	RICA DATA ODL 230V 1000W
Codice cliente	Volt	Watt	W/cm2	Marcatura

ZOPPAS INDUSTRIES - RICA DIVISION OF IRCA SpA RESERVES THE PROPERTY OF THIS DOCUMENT
THIS DRAWING IS TO BE CONSIDERED AN INTEGRAL PART OF THE RELATIVE PRODUCT TECHNICAL DATA SHEET
FORMATO ORIGINALE:420*297
ZOPPAS INDUSTRIES - RICA DIVISION OF IRCA SpA RESERVES THE PROPERTY OF THIS DOCUMENT
WITH PROHIBITION TO REPRODUCE OR TO TRANSMIT IT WITHOUT ITS AUTHORISATION

Stampato il :23-06-2015

Zoppas Industries PRODUCT DATA SHEET

Valid code	- 1EFICK369005
Rev. 000	Description ETCHED FOIL
Reference technical standard	CEI EN 60335-1:2008 + V1
Applicable directives	2002/95/CE Dir.
Electric insulation (protection against electric shocks)	not defined
Protection degree (against the penetration of water and of foreign objects according to IEC 60529)	/

Product use limits

Min-Max voltage	SEE DRAWING
Power	SEE DRAWING
Max temp. of the heating area	175°C
Max temp. of the sealing area	175°C
Max temp. of the cables area	175°C
Work environment / Thermal exchange mean	NOT DEFINED
Notes	

Instructions for use and main warnings for handling and assembly

- Max working temperature allowed on the heater with adhesive 175°C (150°C for silicone heaters UL-certified; 200°C for heaters without adhesive), if not stated differently in the drawing
- Max peel stress allowed on cables depending on the type of sealing and on the cable (for silicone cable 0,75-2,5 mm² with silicone patch, max axial stress 100N)
- Max allowed pressure on heating surface: 6 kg/cm²
- No concentrated pressure is admitted on the heating surface
- Minimum bending radius 8 mm
- In bain-marie and similar applications where there is a thermostat, in case of leakage or liquid evaporation, this must be positioned exactly, above the level of the liquid itself (it is advisable to place the basin slightly inclined and the thermostat where there is no liquid)
- For drum heaters (with velcro blocking system, hook with spring etc) carefully place the heater on a smooth surface without welding or soldering in order to avoid that the heater doesn't stick properly onto the surface causing dangerous over temperature problems. When the heaters are mounted using springs, the strength must be at least 18N.
- Do not apply the heater on greasy surfaces or any substances (ex. dust, water) that can affect the performance of the heater.

HOW TO APPLY HEATERS WITH ADHESIVE
- The heaters must be stored in a room at 20° ± 5° C and max relative humidity 60%, for a minimum of 72 hours before the application.
- The strength of adhesion depends on the surface. An adequate pressure during the application guarantees an optimal adhesion. To obtain a perfect adhesion where the heater is glued, the surface must be dry, clean and even.
- In order to obtain a good adhesion, the surface on which the heater will be applied must be clean, dry and smooth. For the surface cleaning, typical solvents containing isopropilic alcohol diluted with water or heptane can be used. Do not use any solvent containing nitro. Read each solvent instruction carefully. If necessary, the cleanliness of the surface can be verified by having a drop water running on the surface and observing its spherical form (it must become flat).
- Apply the adhesive at a temperature between 20°C and 40°C. It is not advisable to apply the adhesive at a temperature lower than 10°C because the adhesive become stiff.

To be contined in section "Notes"

Instructions for stocking

- The quality of the adhesive is guaranteed for 6 months (adhesives Nitto(TM)*) or 12 months (adhesives 3M(TM)*) if the heaters are stored in a room at 20° ± 5° C and at max 60% relative humidity. In the case of different conditions (but not exceeding the 30% of the values above) the heaters should be stored in a room at the conditions suggested above for a minimum of 72 hours before the application.

* The type of adhesive is reported in the material list of the technical drawing.

Notes

- In normal temperature conditions, the adhesive reaches its maximum strength after 70/80 hours. It is very important to do not heat up the heater to the max before the complete polymerization of the adhesive. This operation can be sped up by heating the element at 80°C for 1 h.
- Place the heater in the correct position for the application; peel off 2-3 cm. of the protective paper on the side opposite to the cables. Glue this part onto the surface using a rubber roll or a plastic spatula. Proceed gradually until all the heater is glued to the surface. The pressure of the roll (or of the spatula) must be sufficient to let air bubbles out between the heater and the surface.

This tecnical data sheet has to be considered an integral part of the drawing.

Our product has been designed according to our present progress report and on the instructions received by the customer.

Zoppas Industries

The suitability and completeness, through which technical and/or informative characteristics have been supplied in this data sheet, have to be analysed carefully by the customer.

The customer anyway has to carry out all the most in-depth controls and all necessary tests in order to check the suitability of our product in the final application to which it is intended and designed for.

Date	2013-02-06	Filled in	Cristian Dumitru
		Approved	Buna Ilie

Zoppas Industries Group reserves all copyrights to this document and prohibits the unauthorized reproduction and transmission of this document.