drawn on the left (mirrored on the right)

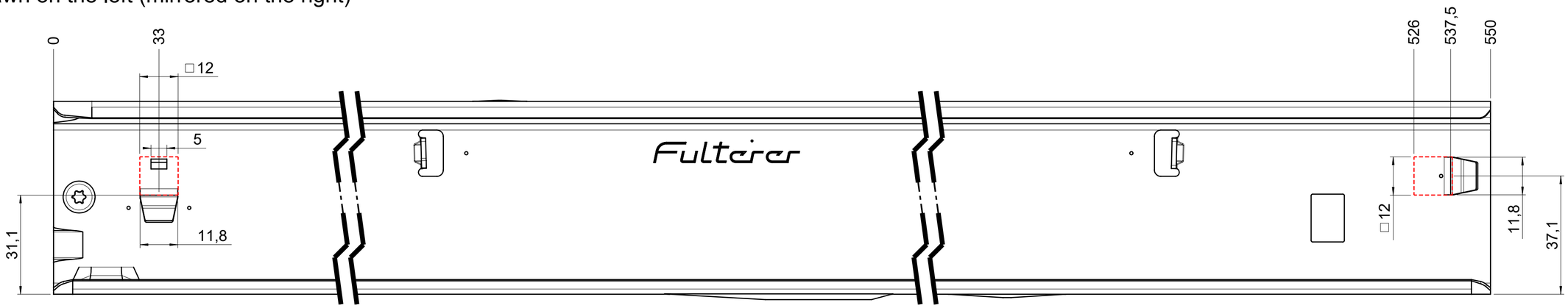

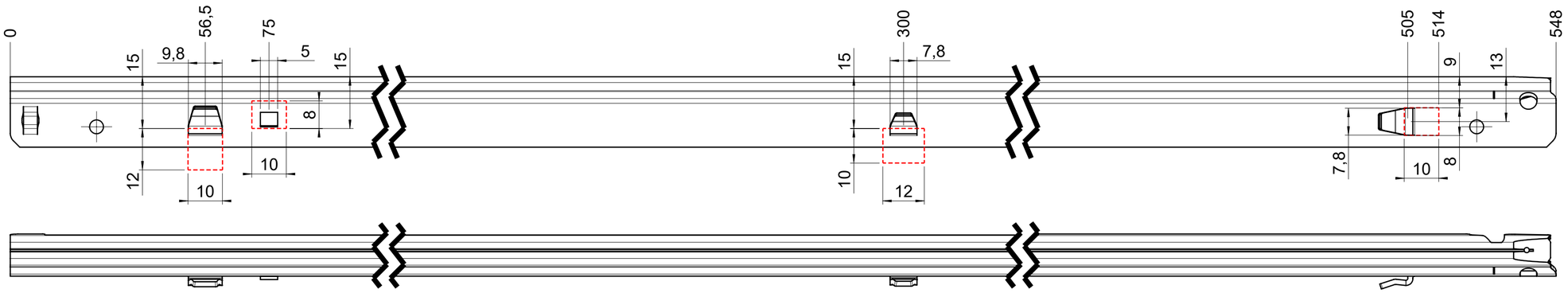

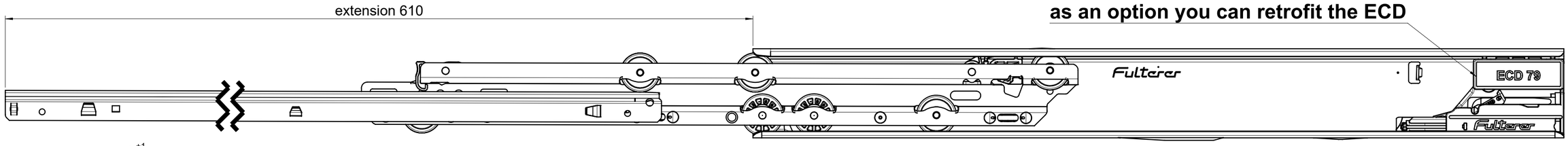

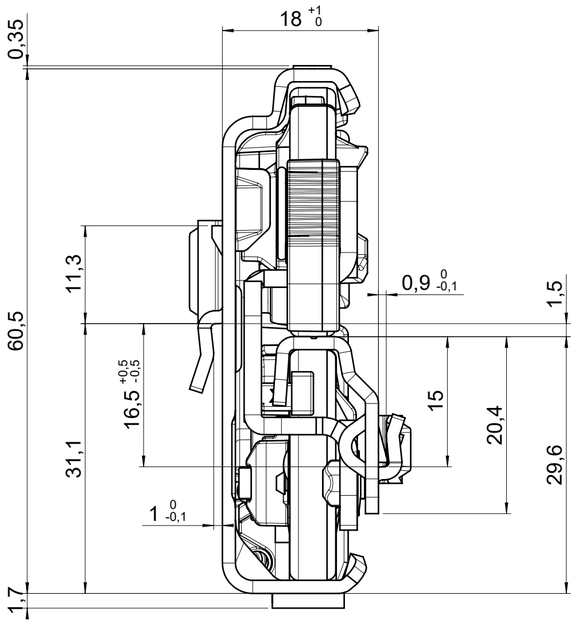

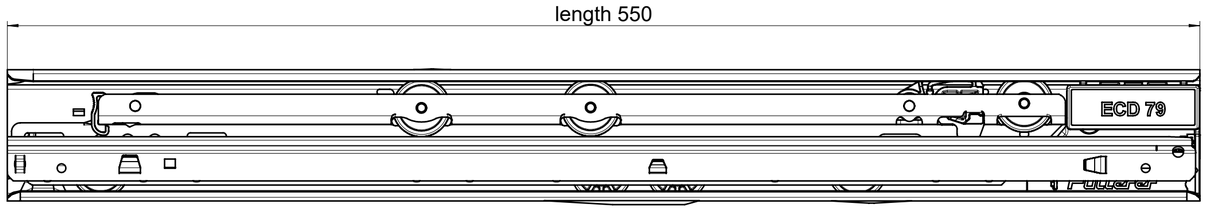

final approval	
	customer name:
	signed by:
	date:

all dimensions in mm

missing dimensions see 3D = theor. intersection	DIN ISO 128-30	scale: 1:1	surface/color:	material: (technical requirements Fulterer) CS
released				description: FR 795-550 CS EN (mm) progressive-action over-extension drawerslide / side mount
			drawn 2024-03-19 RK	
			proven 2025-06-17 RK	
			Fulterer AG & Co KG A-6890 Lustenau; Fulterer AG CH-9430 St. Margrethen	drawing number: CS# 795.550-GA.L538
ⓐ mounting tab drawer profile	2024-09-26	RK		
ind. changes	date	name		replaces the edition:

This drawing remains our property and may not be multiplied neither be disclosed to third parties (§§1,3 and 5 from the copyright Act (UrhG)).

covered according to DIN ISO 16016

A2