Technical data sheet

echtermann®
SPEZIALARMATUREN

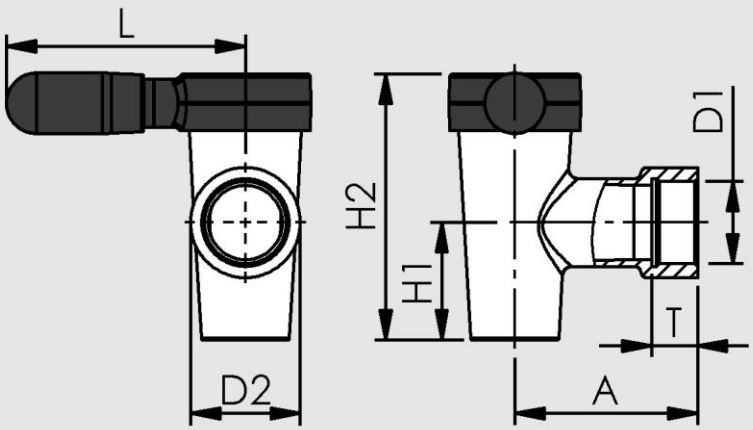

Nenngröße D1	A	D2	H1	H2	T	L
G 1 1/2"	100	60	64	145	25	131
G 2"	120	72	70	158	30	135

Designation: **Safety drain tap**

Article number: **6726.62 Connection size 1 1/2"**

6726.82 Connection size 2"

Proper use:

The safety drain tap is designed for use on commercial cooking boilers in commercial kitchens and butcher's shops. It is designed as an outlet valve for both unpressurised cooking boilers and for pressure cooking boilers with a maximum operating pressure of 0.5 bar. The fitting must only be operated by trained specialist staff with a minimum age of 14 years.

Description:

- All parts which come into contact with food are manufactured from stainless steel and meet the requirements of DIN 18855 paragraph 6.2 for cooking boilers.
- Access safeguard to prevent accidental opening.
- Heat-insulated cover and handle made from heat-resistant high-tech plastic.
- "Open" position indicated by red marking.
- The pistons fit any housing.
  No risk of confusion.
- Tested and approved by the trade association.

GEBR. ECHTERMANN
GMBH & CO. KG
SPEZIAL – ARMATURENFABRIK

Postfach 1465
58584 Iserlohn, Germany
Bertholdstr. 5
58644 Iserlohn, Germany

Telephone: +49 (0) 2371 / 9582 – 0
Fax: +49 (0) 2371 / 52787
contact@echtermann.de
www.echtermann.de

Improper use:

The safety drain tap is not designed for use with pressurised cooking devices with pressure greater than 0.5 bar.

Function:

The handle points to the left when the tap is closed and engages in this position to protect against unintentional opening in the housing. The handle first has to be pulled outwards to open. If the red marking is visible, the tap can be opened by turning it. The red marking is permanently visible when the tap is open and is thus an indicator and warning sign. The tap is sealed with commercially available high-performance O-rings.

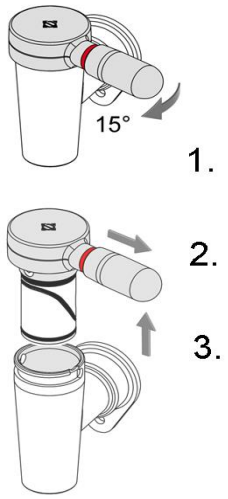

Hazard warning:

Each time a draining procedure is performed, there is a risk of scalding from the hot liquid which is expelled. If the tap is opened when there is overpressure and the cooked goods are overheated, the water will spontaneously evaporate which involves a considerable expansion of volume. As a result there is an much higher risk of burns and scalding for the operator.
The drain tap must only be removed or repaired in a depressurised state and with the cooking appliances fully drained.

Care instructions:

Do not use cleaners with chlorine or acid content. You must not use high-pressure cleaning devices as per work sheet VdF 018.
After each cleaning procedure lightly grease O-rings and pistons.

For re-application of grease use Echtermann special grease for valves and fittings.
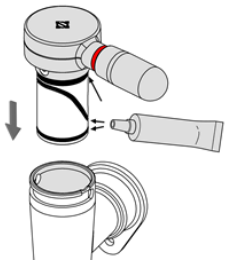
Tube 100g 2366/100