opk Flagship 5 W Mounting Instruction

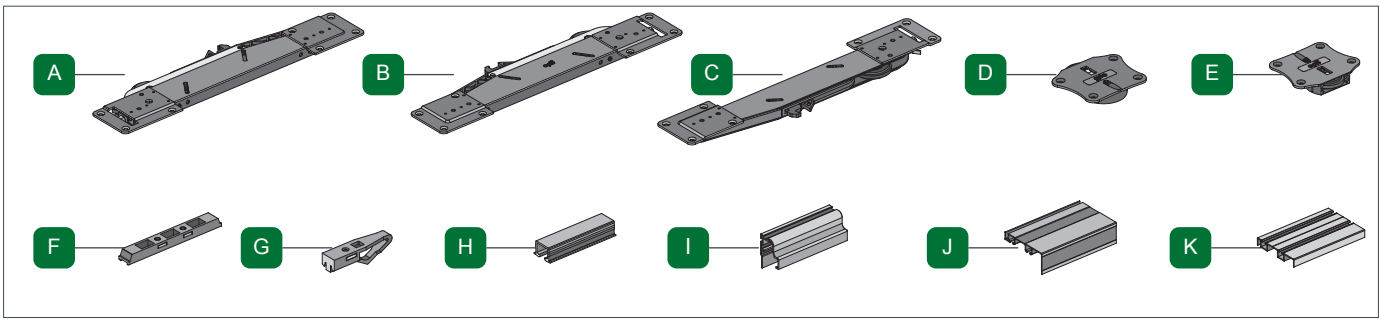

Einseitige Dämpfung / One side damping

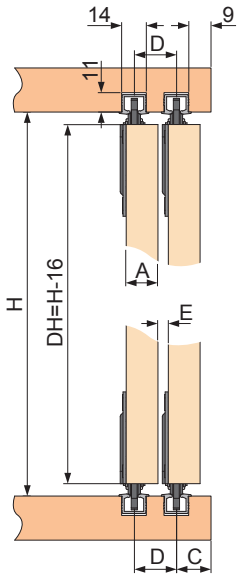

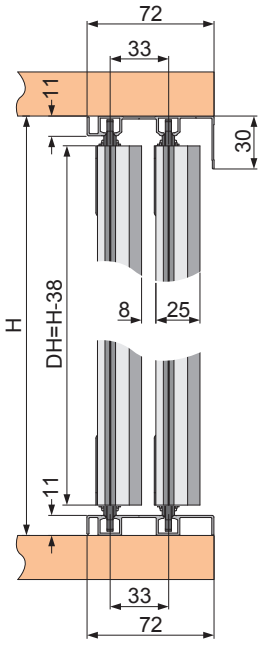

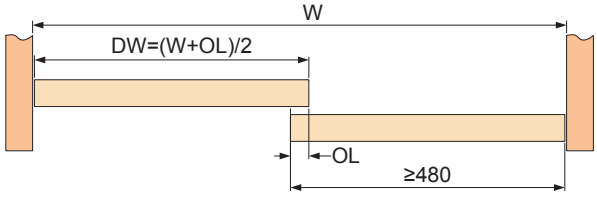

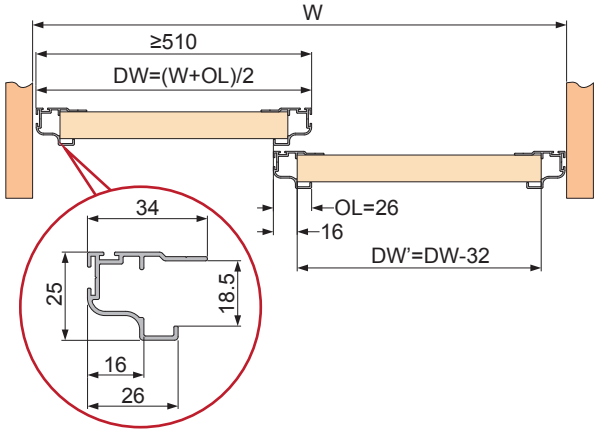

	A (16mm)	A (18mm)	A (19mm)
C	16mm	16mm	16mm
D	22mm	24mm	25mm
E	6mm	6mm	6mm

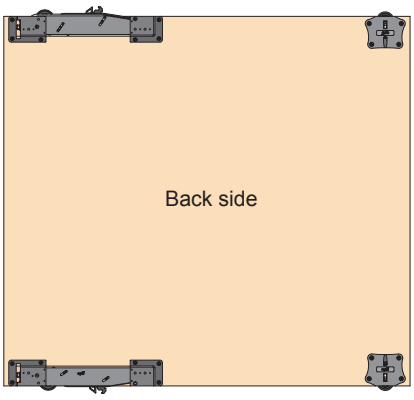

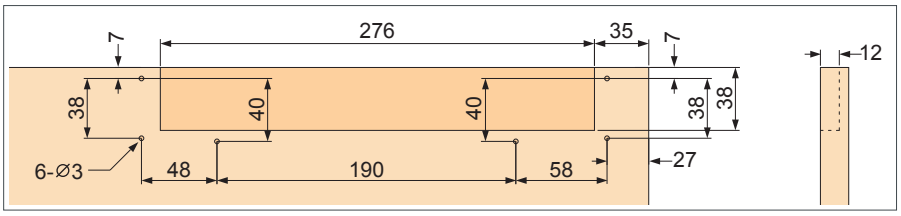

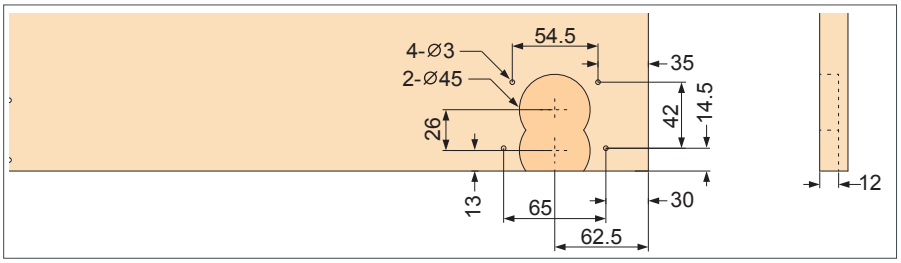

Beidseitige Dämpfung / Both sides damping

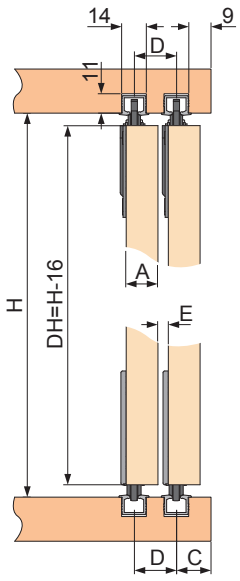

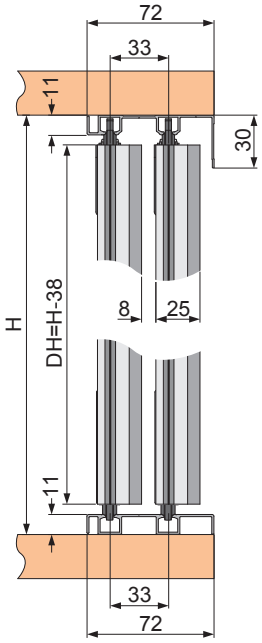

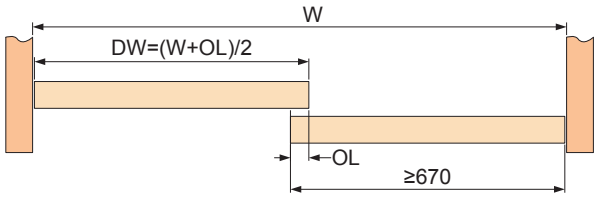

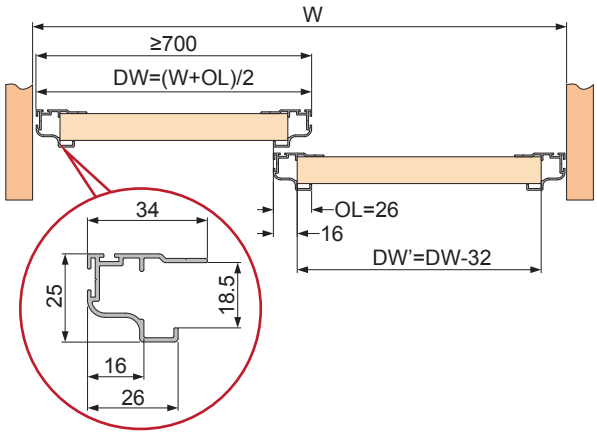

	A (16mm)	A (18mm)	A (19mm)
C	16mm	16mm	16mm
D	22mm	24mm	25mm
E	6mm	6mm	6mm

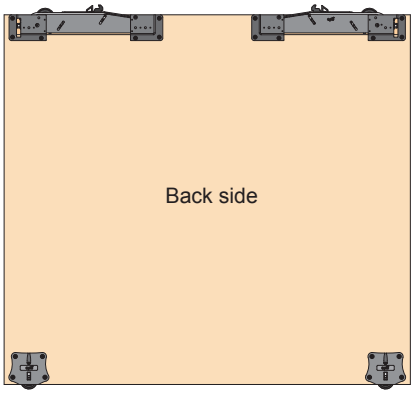

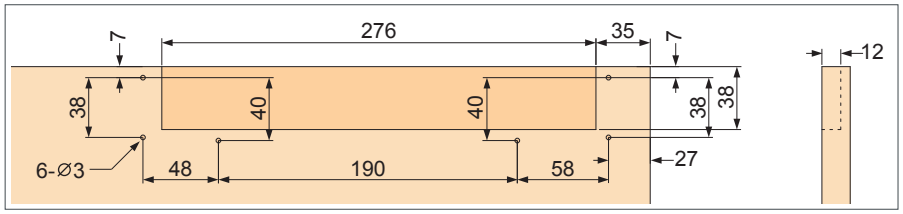

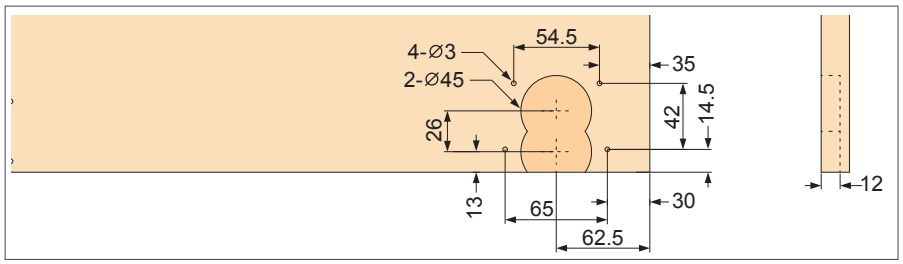

1 Einseitige Dämpfung / One side damping

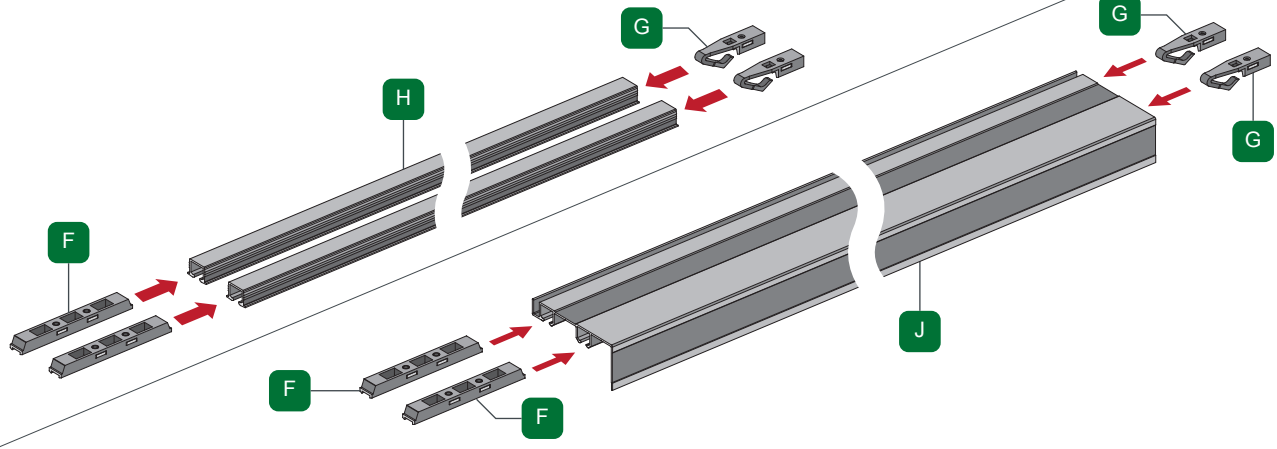

1 Beidseitige Dämpfung / Both sides damping

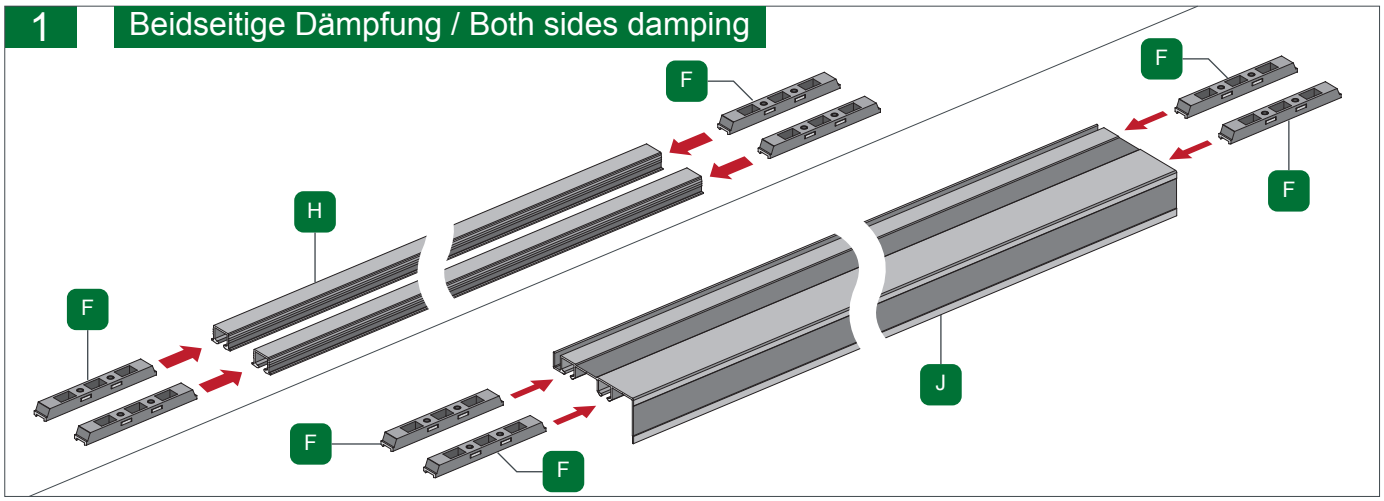

2 Einseitige Dämpfung / One side damping

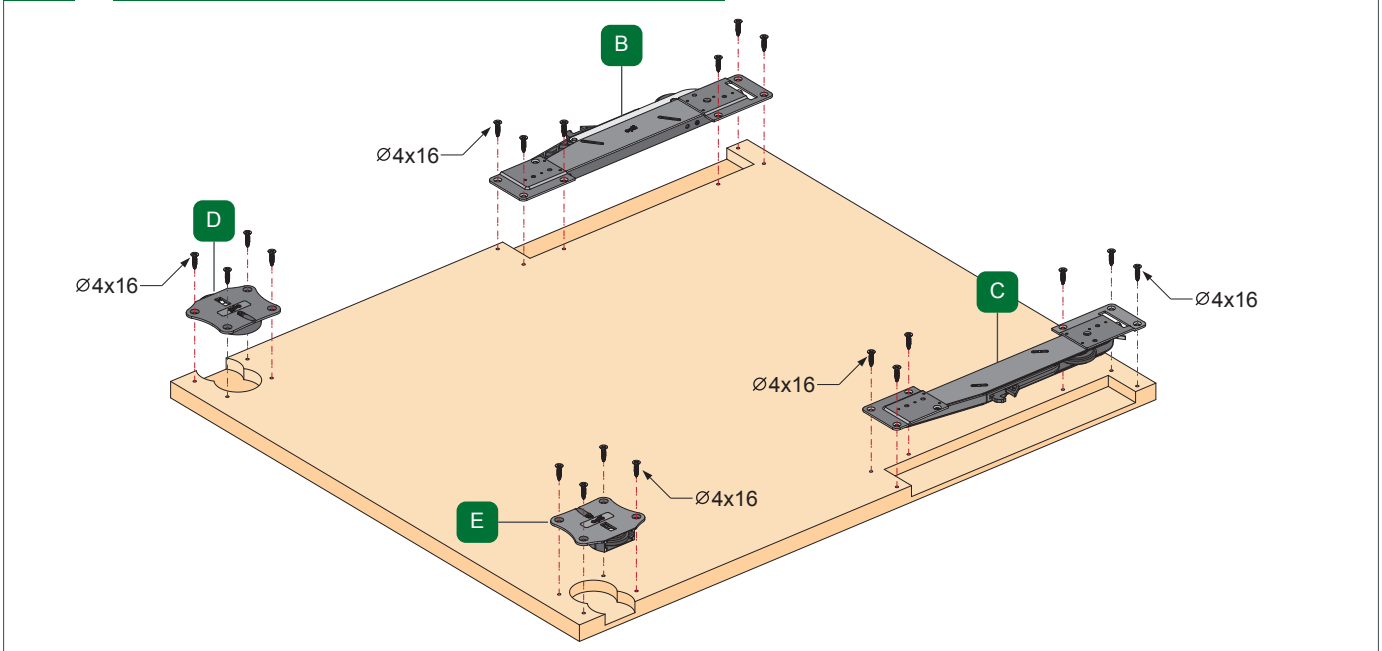

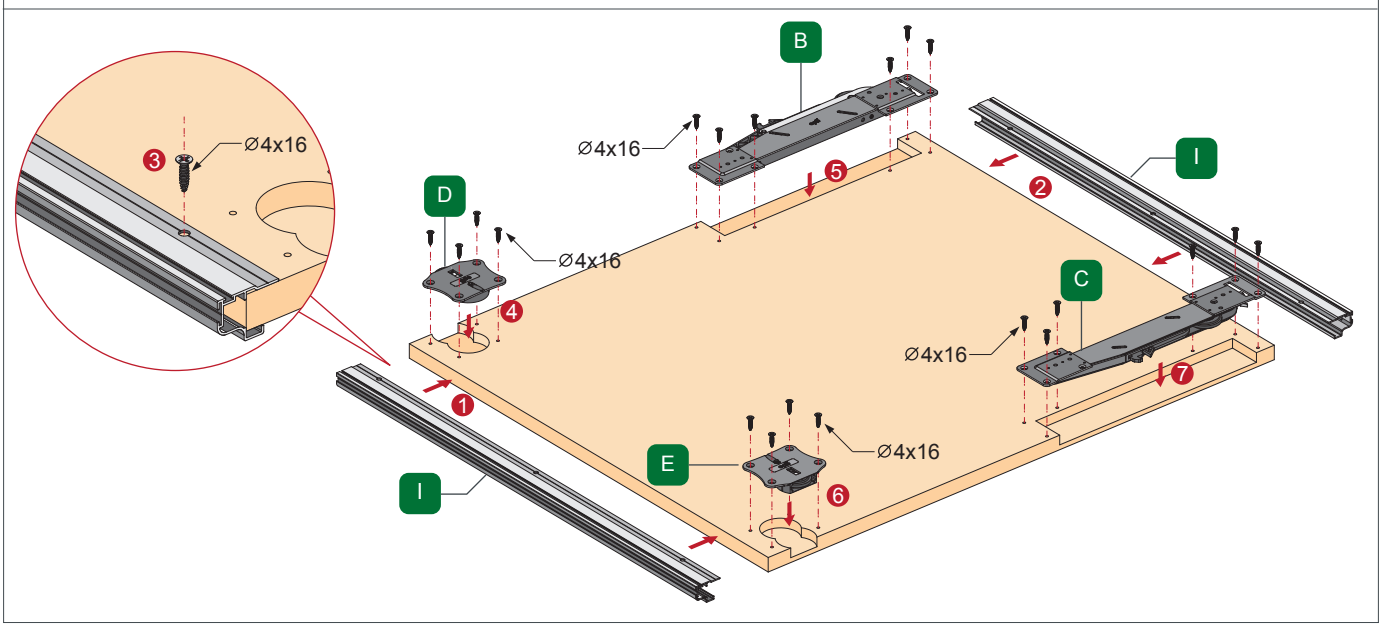

2 Beidseitige Dämpfung / Both sides damping

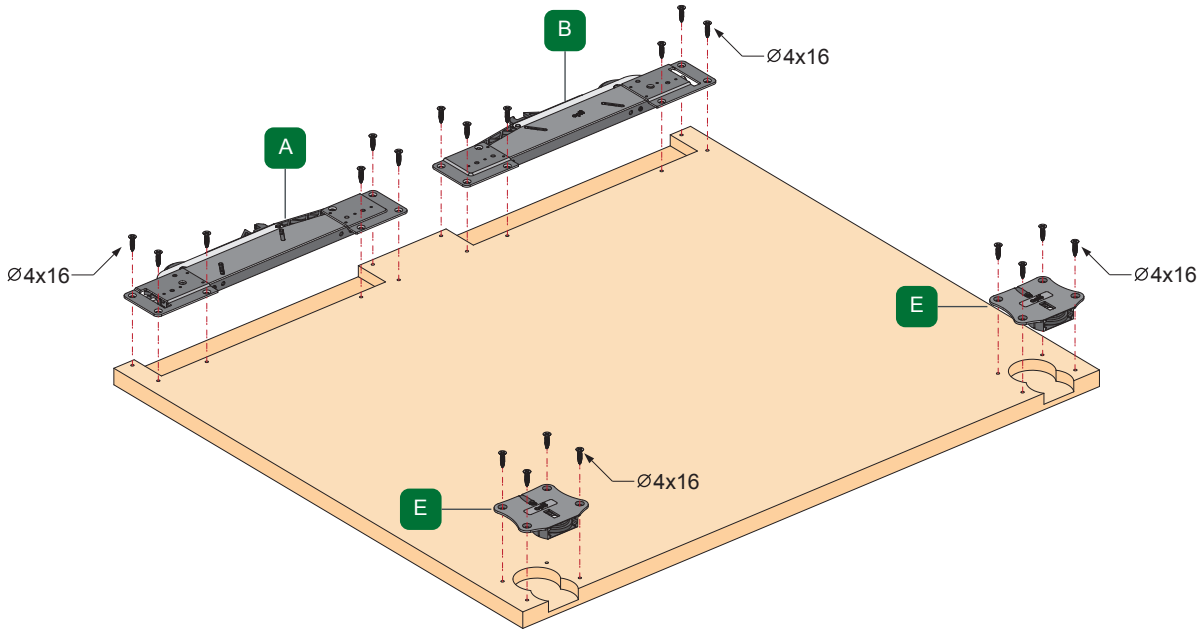

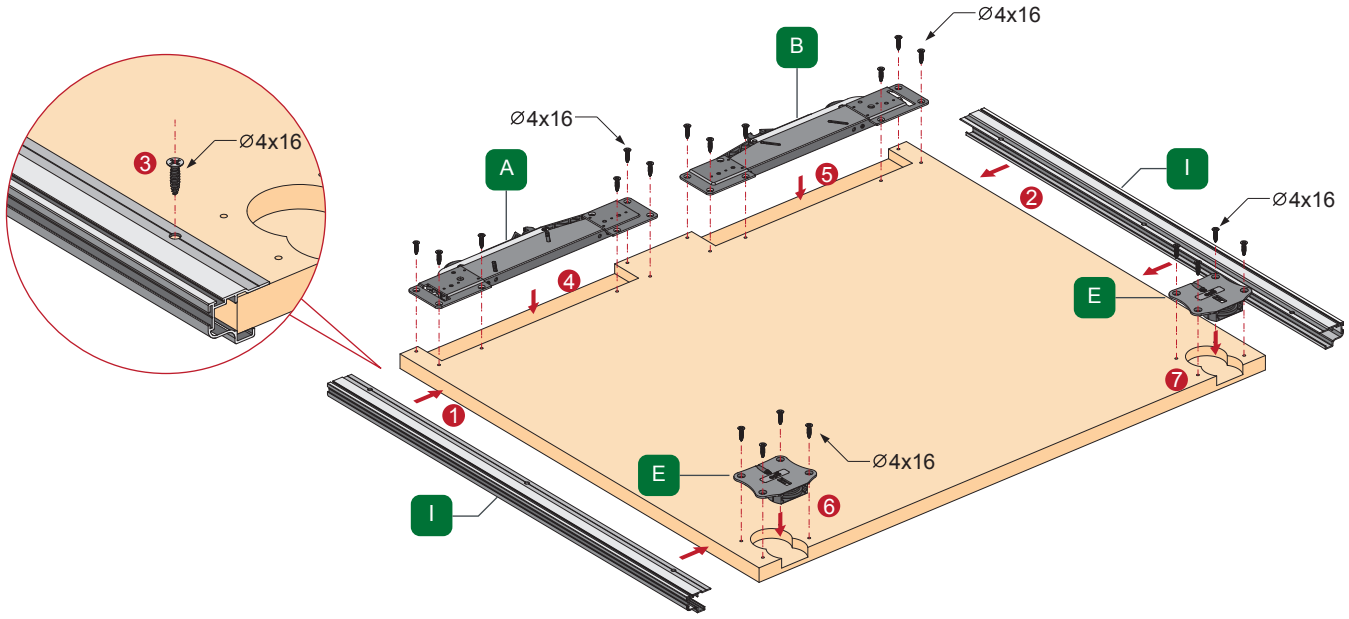

3

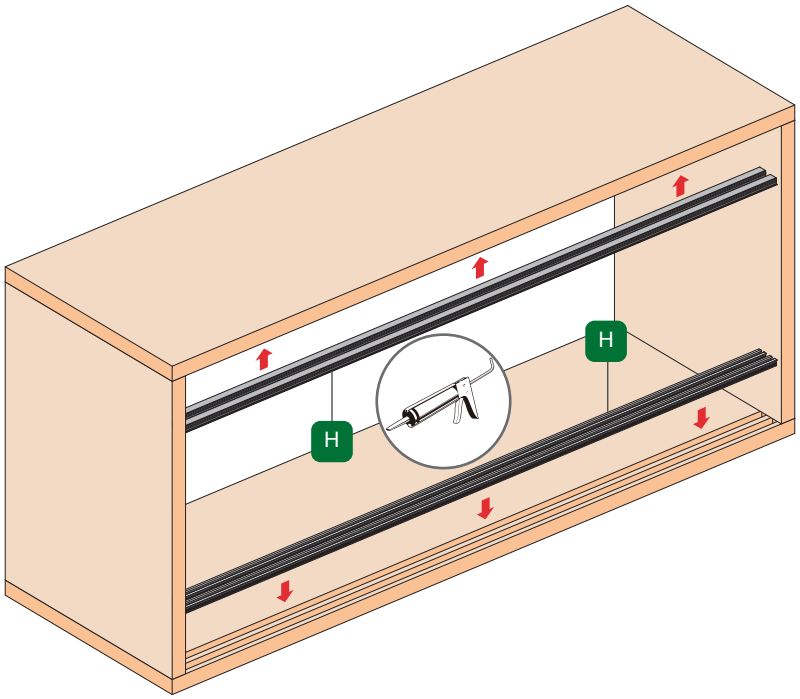

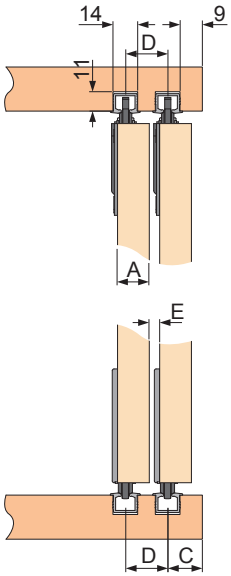

	A (16mm)	A (18mm)	A (19mm)
C	16mm	16mm	16mm
D	22mm	24mm	25mm
E	6mm	6mm	6mm

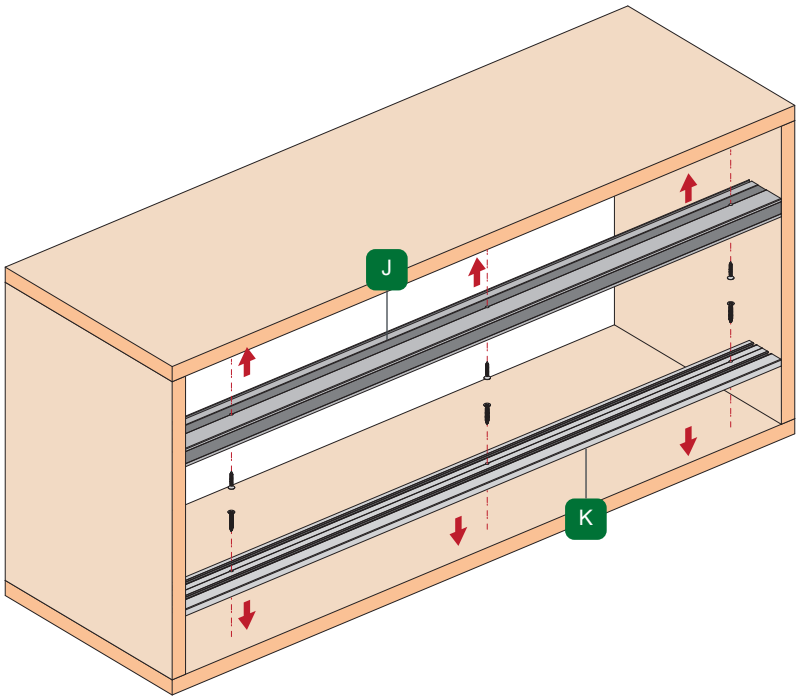

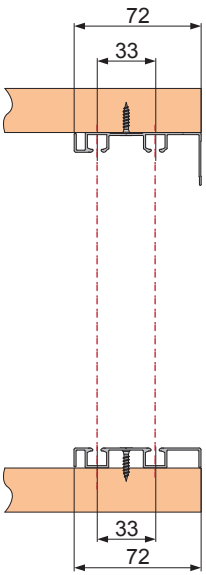

4

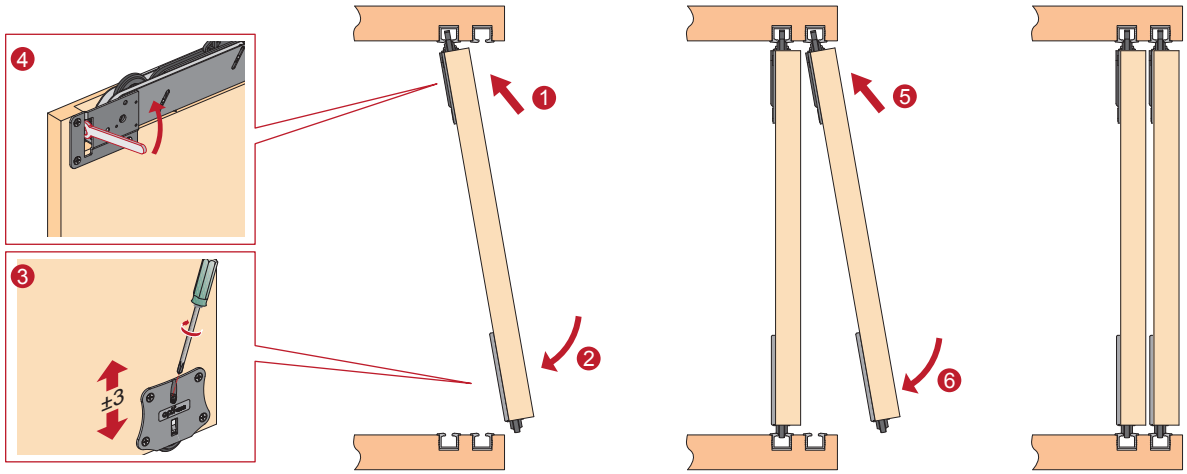
4
3
±3
1
2
5
6

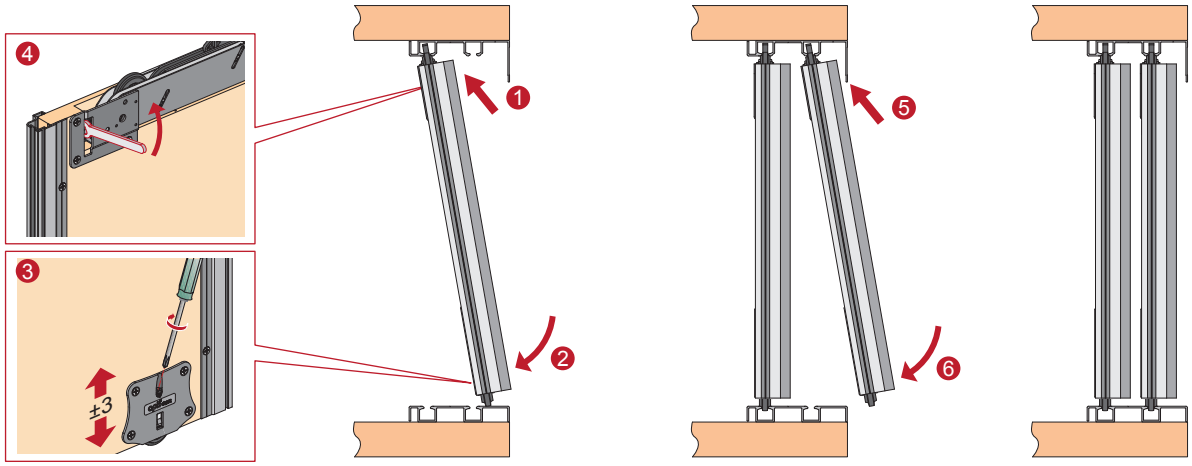
4
3
±3
1
2
5
6

5

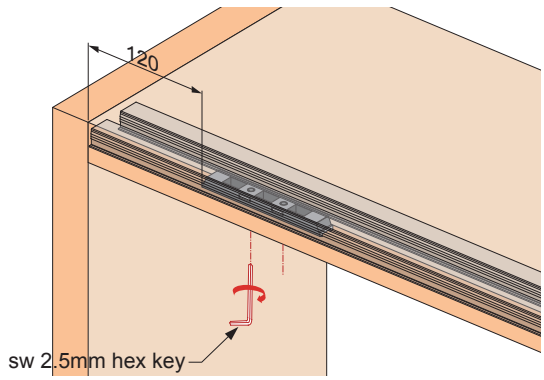
120
sw 2.5mm hex key

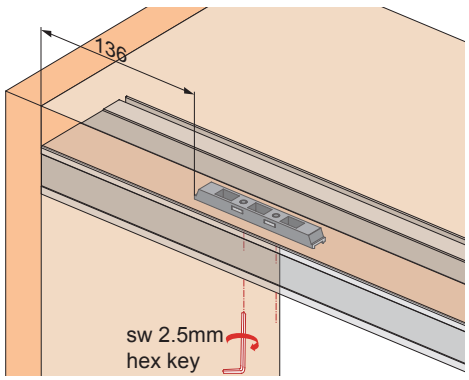
136
sw 2.5mm
hex key

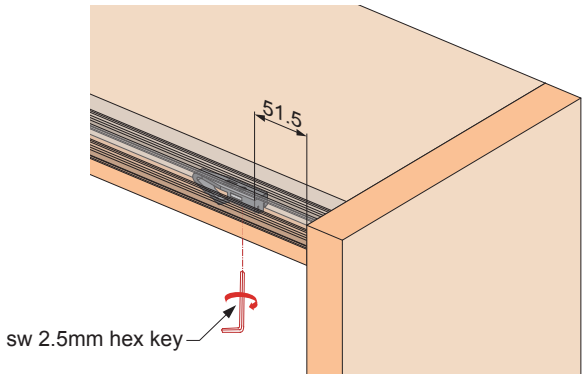
51.5
sw 2.5mm hex key

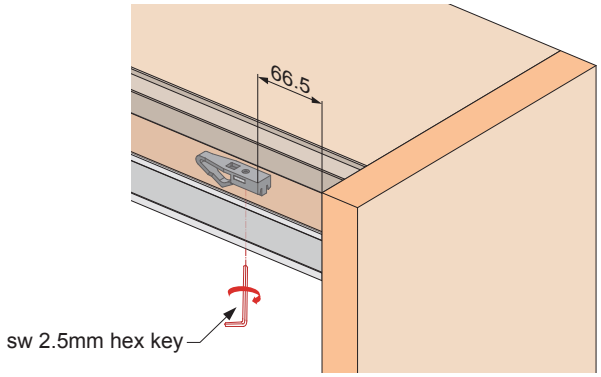
66.5
sw 2.5mm hex key