Product information

Silento Doppio 50

ZIMMER GROUP
Am Glockenloch 2
77866 Rheinau / Germany
T +49 7844 9110-0
F +49 7844 9110-6199
info@daempfungssysteme.de
www.zimmer-group.com

General data:

Type of product:	Self-closing unit with fluid damper
Origin:	Rheinau, Baden- Württemberg, Germany
Lifetime:	100.000 cycles
Installation option:	Sliding door Drawer

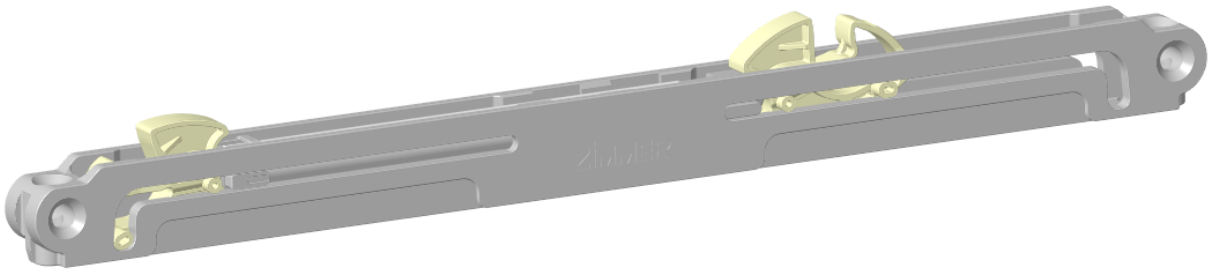

Customer-friendly, uncomplicated and extremely diverse.

The Silento Doppio offers a pleasant damping of sliding doors in both directions - opening and closing. User-friendly connection options complete the new ZIMMER product: Whether invisibly integrated into an existing track, mounted in various installation positions (flat, upright, right or left-hand locking) or adaptively mounted on the carriage.

Index

1. Content 3
2. Function 3
3. Technical data 4
4. Characteristics 4
5. Integration 5
6. Overlap of locking hooks 6
7. Accessory 7
8. Damping characteristic 8
9. Technical drawing 9
10. Test procedure 10
11. Materials 10

1. Content

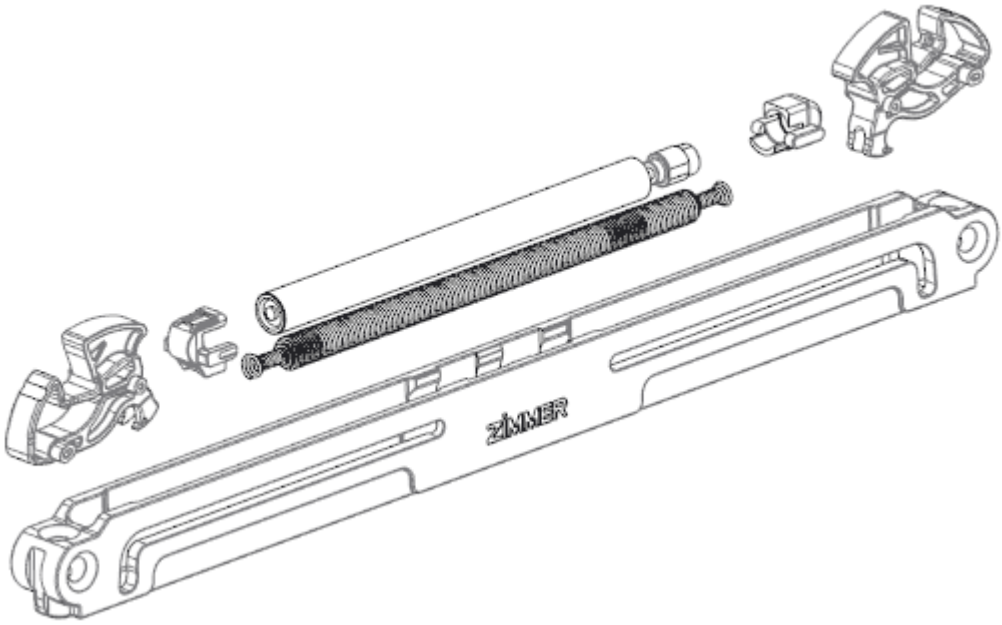

2. Function

One side is always in the end position the other side is pulled open when the element is opened. Thus, the unit is charged. Now it can dampen both in the front end position and in the rear end position.

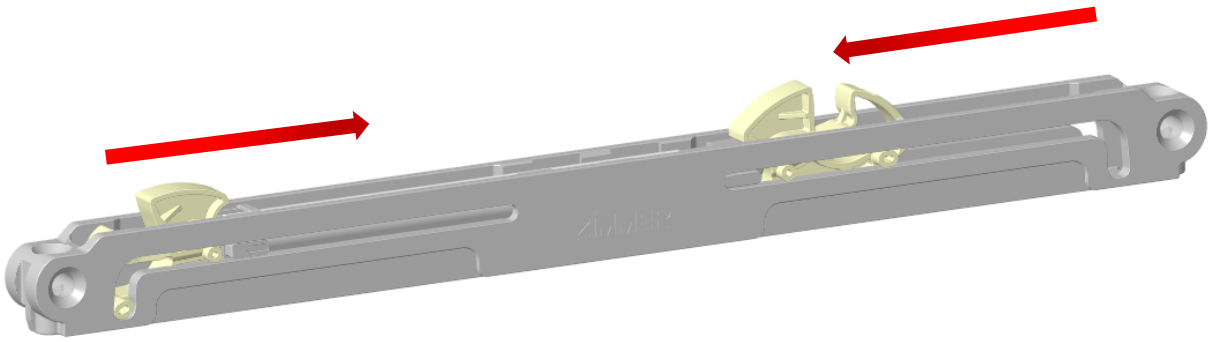

3. Technical data

Housing length [mm]:	237
Housing width [mm]:	12,2
Housing height (total height) [mm]:	17,8 (28,9)
Distance fixing points [mm]:	224
Ø of fixing holes [mm]:	4,2 / 4,6
Stroke [mm]:	50
Weight to be braked [kg]:	15-50
Lifetime [cycles]:	100.000
Release:	possible
Operating conditions [°C]	+10 <-> +40
Storage conditions [°C]	-20 <-> +80

4. Characteristics

Closed unit	
Effective direction outside closing	
Effective direction inside closing	☑
Fluid damper	☑
Air-friction damper	
Damping effect one-way	
Damping effect both-sided	☑
Different locking hooks possible	☑
Emergency function	☑

5. Integration

Main application:

Sliding door	☑
Drawer	☑
Hinge	
Flap	

Multiple orientation of the fixing possible	☑
Fixing hole with lowering	☑
Connection to running gear provided	
Mounting on running rail possible	☑
Retrofit	☑
Threaded nut possible for the fixation	

Do not use as end stop! Additional customer-side end stop necessary!

6. Overlap of locking hooks

Soft close unit with ZIMMER activator

	Nominal dimensions *[Figures in mm]*	Tolerance range *[Figures in mm]*
B	1,00	+2,00
Y	50,00	-1,00
Z	32,00	±0,15

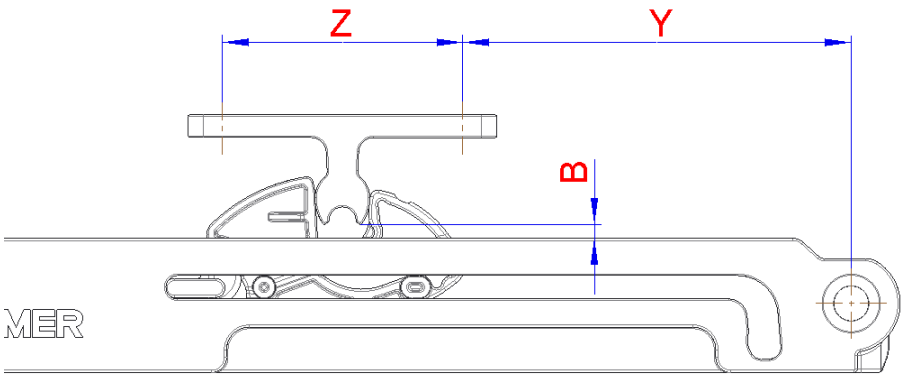

* Do not use as end stop! Additional customer-side end stop necessary!

Soft close unit without ZIMMER activator

	Nominal dimensions *[Figures in mm]*	Tolerance range *[Figures in mm]*
A	70,00	-1,00
B	1,00	+2,00
C	6,00	-0,20

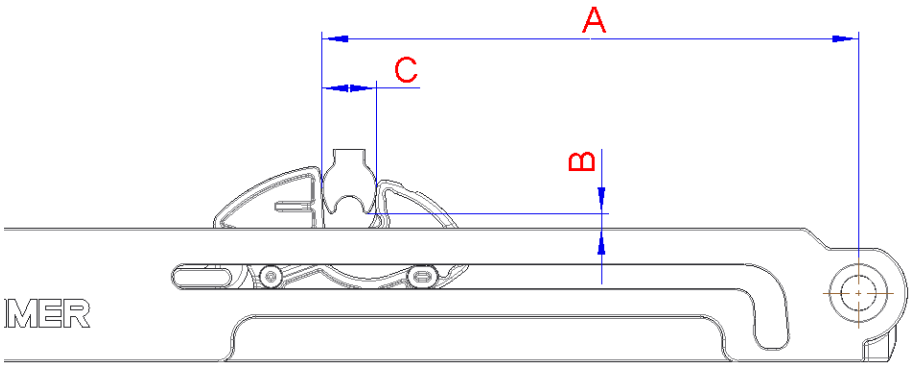

* Do not use as end stop! Additional customer-side end stop necessary!

Note:
When using your own actuator, make sure that dimensions A / B / C are maintained. The contour of the activator is to be determined by arrangement Fa. Zimmer.

7. Accessory

Locking hook

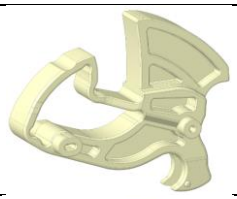	Standard locking hook
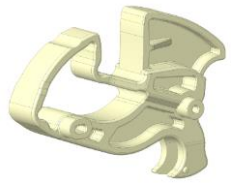	Lower locking hook if space is tight

8. Damping characteristic

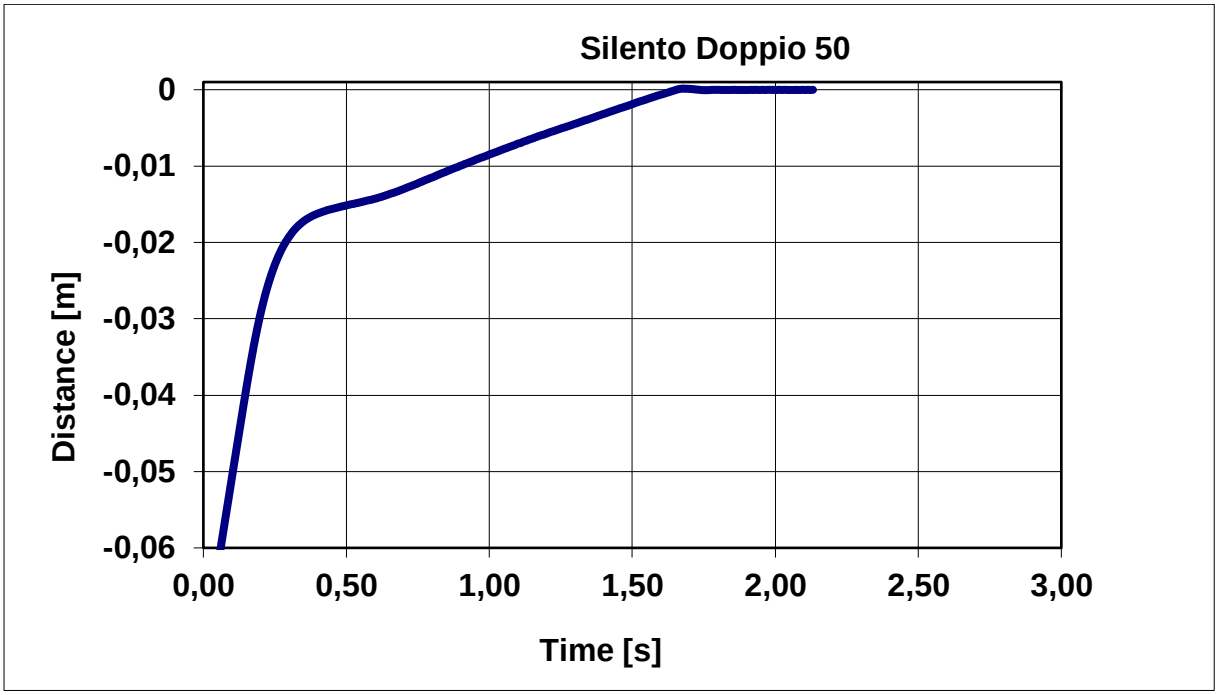

v ~ 0,25 m/s

9. Technical drawing

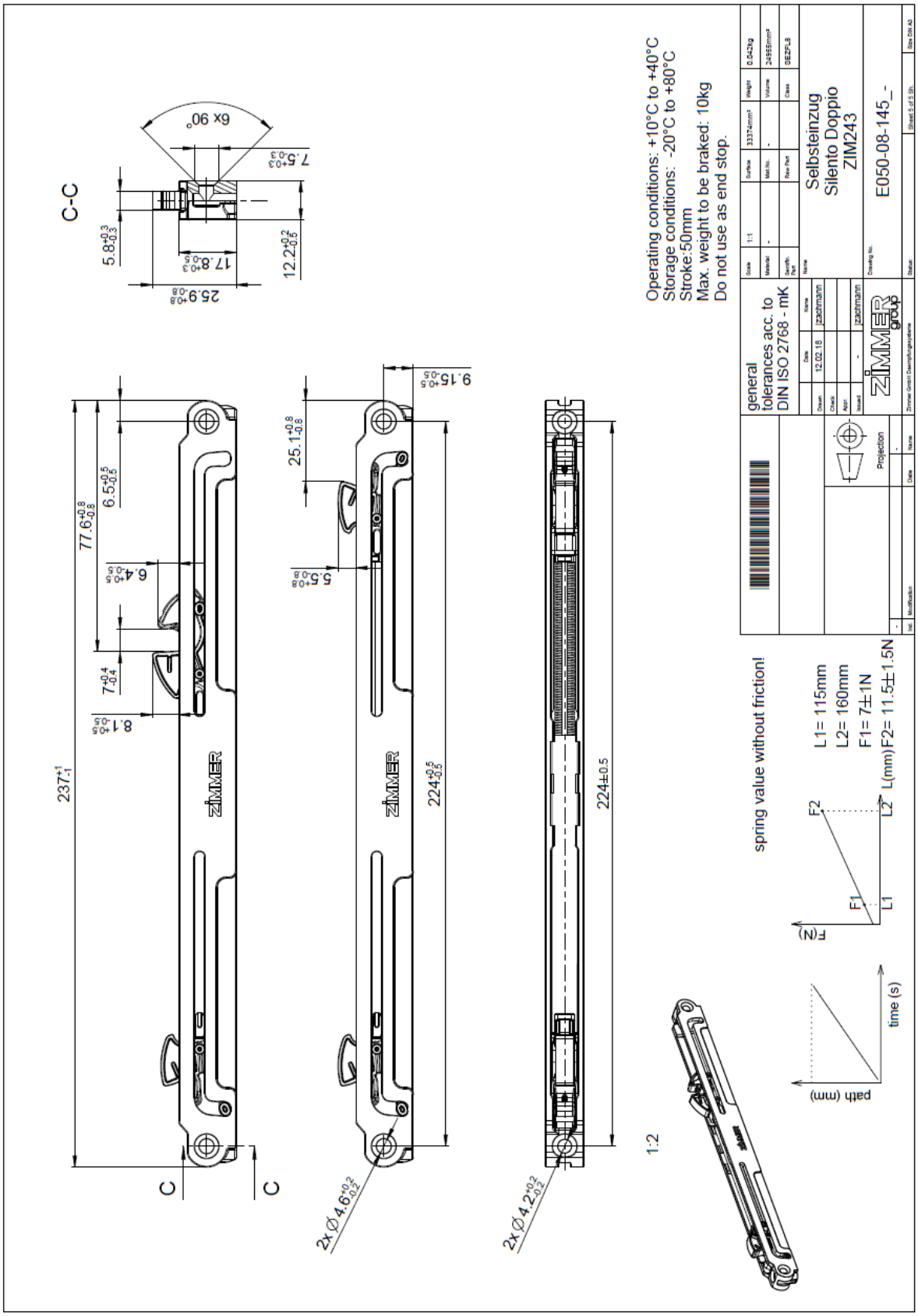

10.Test procedure

Test	Requirements according to Zimmer	Requirements Zimmer met
Long-term test	100.000 cycles	✓
Over stress test	10x ~1m/s	✓
Storage test	-20°C to 80°C	✓
Climate test	10°C to 40°C	✓

11. Materials

Housing:	POM GF25
Hook:	Polyketon
Spring:	EN10270-1-DH / 1.4310