Water Leak Detector w/Rope Sensor – 5 Amp Relays

Accessories for HVAC/R

Rev. 12/16/24

Features & Options

- Detection Within 5 Seconds with Local LED Alarm Indication
- Alarm Output, Two 5 Amp Relays
- Rope Detects Water Along Its Entire Length
- Automatic or Manual Unit Reset

The Water Leak Detector is designed to sense the presence of water and alert a central monitoring system of the potentially destructive situation.

Upon water detection, the alarm output relays change state, and a local red LED illuminates.

Flex Connector

Liquid Tight Fitting

Rope Sensor Mounting Bracket

The BAPI Rope Sensor Mounting Bracket is specifically designed to hold the rope taut and prevent rope slippage allowing for maximum contact with the monitored surface. Bracket can be easily mounted to flat surfaces utilizing the industrial adhesive backing or the built in screw holes.

Part Number: BA/LDT-RR-MB (Pack of 25)

Specifications

Power:
24VAC/VDC ±10%, 3.9VA max @ 24VAC, 90mA max @ 24VDC (Reverse Polarity Protected)
Note: This unit does not require a separate isolated power supply.

Rectification: Half Wave

Wiring:
Screw Terminals: 2 to 4 pair of 12 to 22AWG (BAPI recommends 16 to 22AWG).
Rope Sensor: 2 wires (provided), optional Flex Connector or Liquid Tight Fitting for strain relief

Rope Sensor Specifications:
Plenum-rated rope sensor cable, detects 1/8" of water. Max length: 100' (30.5m)
Internal termination rope sensor lead wires, 22 AWG

Alarm Reset Action: Field selectable for Auto (Non-Latching) or Manual (Latching)

Local Indication: One green power LED, one red alarm LED

Alarm Relay Contacts: Two SPDT, 5 Amp relay outputs

Operating Environment
Rope Sensor: 32 to 167ºF (0 to 75ºC)
Detector (BB): -4 to 158ºF (-20 to 70ºC), 0 to 95%RH, non-condensing

Enclosure Material and Ratings:
NEMA 4 (IP66), UV-resistant polycarbonate, UL94 V-0

Agency:
CE 61326-1:2013 EMC (Industrial Electromagnetic Environment), RoHS, UL

Warranty: 5 years

Building Automation Products, Inc. • 750 North Royal Avenue, Gays Mills, WI 54631 USA
Tel: +1-608-735-4800 • Fax: +1-608-735-4804 • Email: sales@bapihvac.com • Web: www.bapihvac.com

Water Leak Detector w/Rope Sensor – 5 Amp Relays

Accessories for HVAC/R

Water Leak Detector Option Selection Guide

BA/ (**#1**) - (**#2**) - (**#3**)

#1: Leak Detector Transmitter (required)
LDT4 ..... Water leak detector with two 5A relays, SPDT contacts

#2: Probe Sensor (required)
RR10 ..... Remote Rope Sensor with 10 foot plenum-rated sensor cable
RR25 ..... Remote Rope Sensor with 25 foot plenum-rated sensor cable
RR50 ..... Remote Rope Sensor with 50 foot plenum-rated sensor cable
RR100 ..... Remote Rope Sensor with 100 foot plenum-rated sensor cable

#3: Enclosure and Fitting Options (required)
BB ..... BAPI-Box enclosure, IP66 rated
BB-LTF ..... BAPI-Box enclosure, IP66 rated, with liquid tight fitting
BB-GFF ..... BAPI-Box enclosure, IP66 rated, with flex connector

Example Number: BA/ (**LDT4**) - (**RR10**) - (**BB**)
Actual Number (with parenthesis removed): BA/LDT4-RR10-BB
Description: Detector with Two 5A Relays, 10' Remote Rope Sensor and BAPI-Box Enclosure

Your Number: BA/

Replacement Sensors and Mounting Brackets

Part Number	Sensor Type
BA/RR10	Remote Rope Sensor with 10 foot plenum-rated sensor cable
BA/RR25	Remote Rope Sensor with 25 foot plenum-rated sensor cable
BA/RR50	Remote Rope Sensor with 50 foot plenum-rated sensor cable
BA/RR100	Remote Rope Sensor with 100 foot plenum-rated sensor cable
BA/LDT-RR-MB	Mounting Bracket for Rope Sensor (Pack of 25)

Gray shaded items follow the Buy and Resale Multiplier.
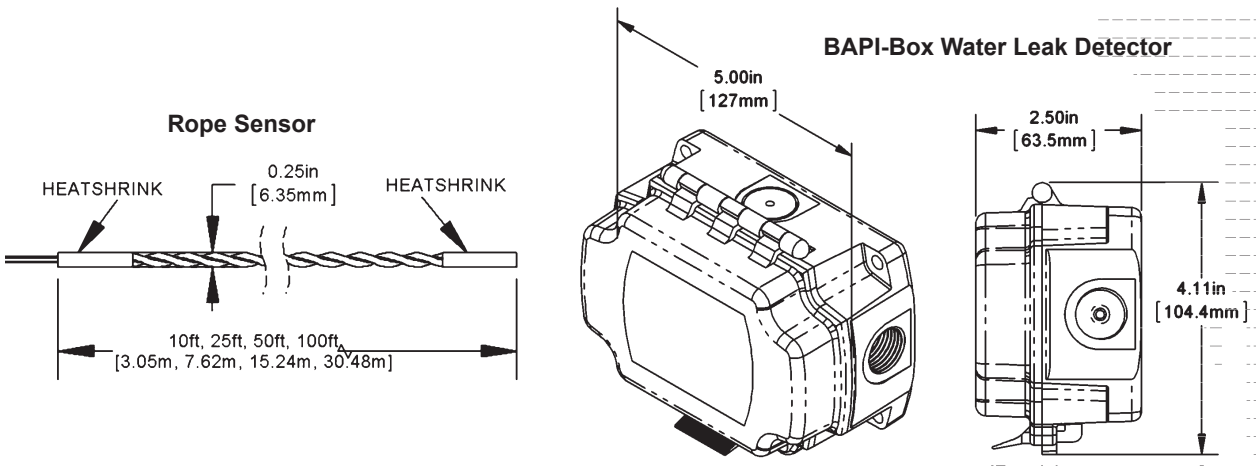
Dimensions