Fulterer®

Easy Close Device

FR 793 SCC | FR 794 SCC | FR 795 SCC | FR 796 SCC

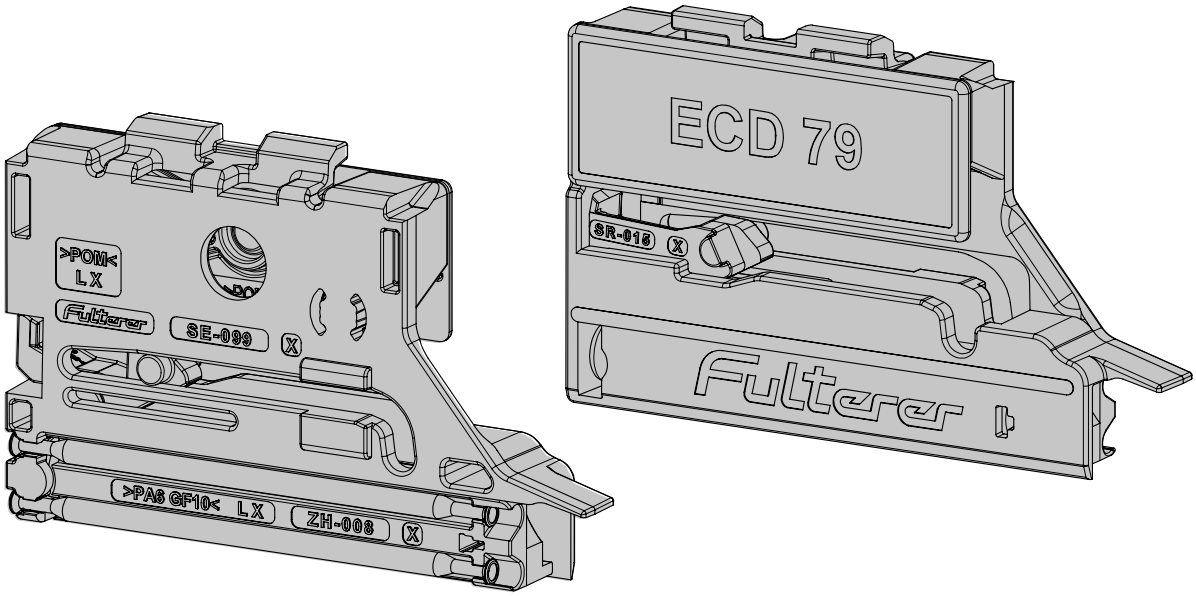

9710007995 | 1.3

Fulterer AG & Co KG | Höchster Straße 11 | 6890 Lustenau, AUSTRIA | info@fulterer.com

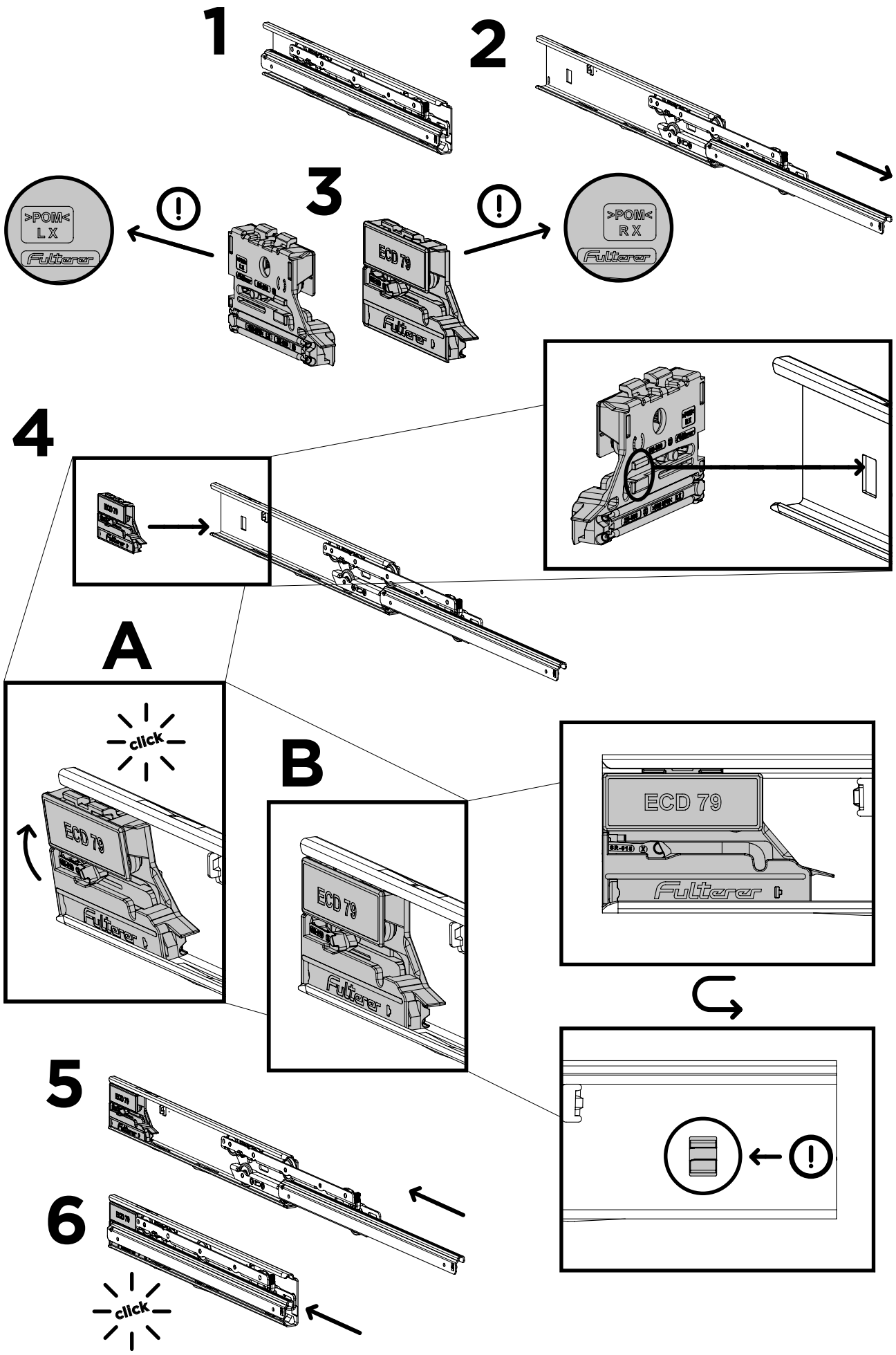
1
2
3
>POM<
L X
>POM<
R X
ECD 79
Fulterer
4
A
click
B
5
6
click