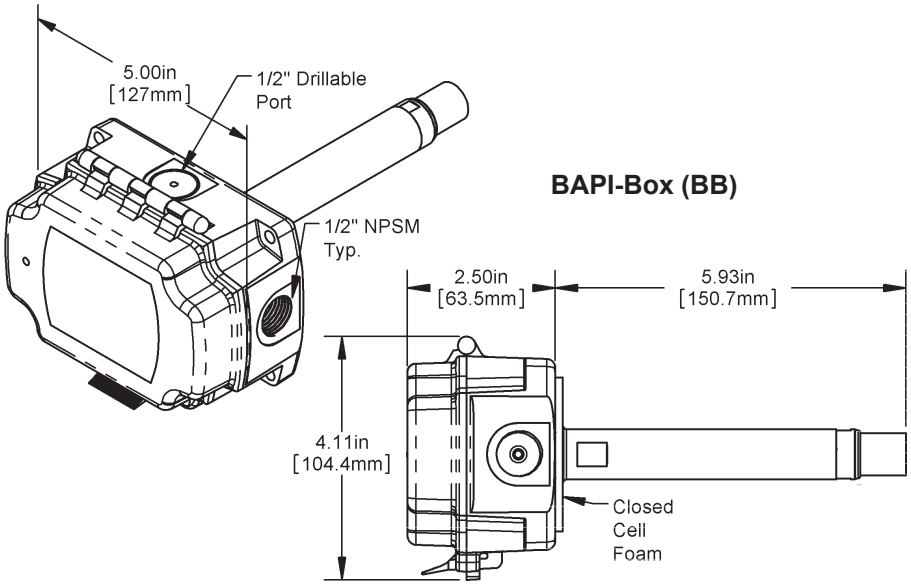

BAPI-Box (BB)

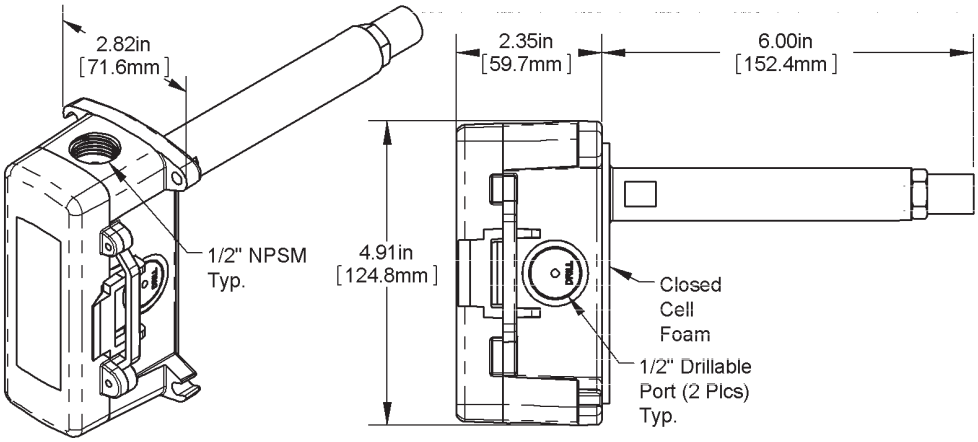

BAPI-Box 2 (BB2)

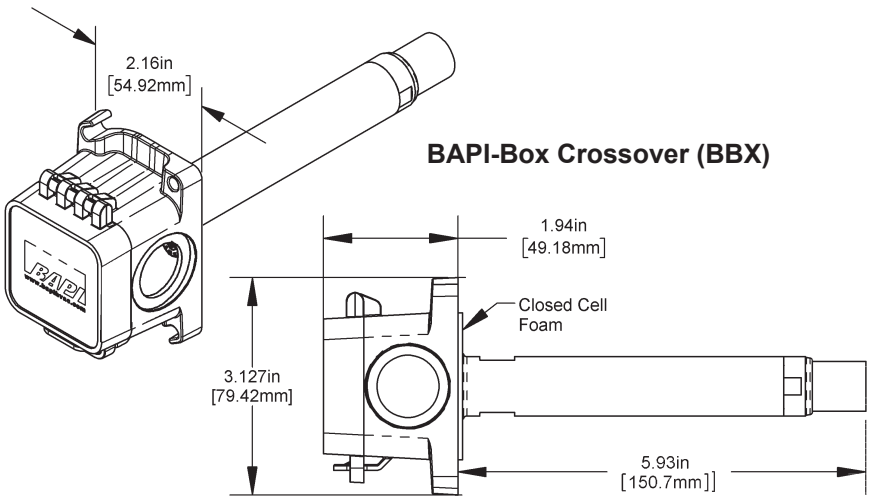

BAPI-Box Crossover (BBX)