PROJECT **NAME:**

_____ **LOCATION:**

_____

SPECIFIER ITEM NO. _____**QTY:** _____

LED Strip Light For Commercial Cooking Hoods

LED-L82-1040-CE-x

LED-L82-1040-CE-W Warm White
LED-L82-1040-CE-N Natural White

LED-L82-1040-CE-N

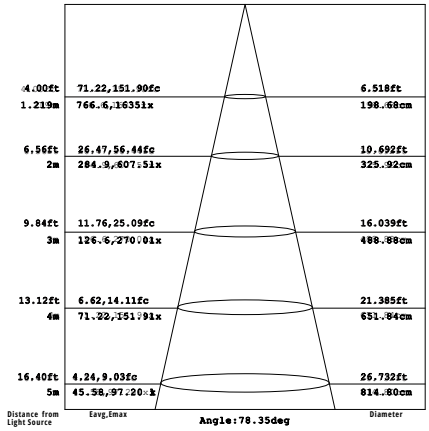

LED-L82-1040-CE-W

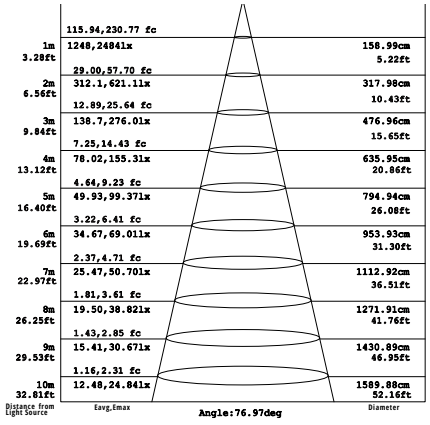

Power = 53 W
Voltage = 100-277 VAC
Current = 0.53-0.19 A
Frequency = 50/60 Hz

Warranty - 5 year

Low profile, high output, energy efficient LED lights

Approved for use in non-dwelling applications

Specifically designed for commercial cooking hoods
- Listed for up to 75ºC (167ºF) operation
- Color Rendering Index > 80
- CE certified, RoHS compliant
- Up to IP66 possible

Environmentally friendly, energy efficient
- LED lamps contain no mercury or other hazardous materials
- Contributes to LEED® energy use reduction credits
- 50,000 hour lamp life
- Easily retrofit for inefficient fluorescent lights
- Long LED life means reduced maintenance costs
- Higher light output for a brighter, safer work environment

Bright, focused light
- Highest efficacy (lumens/watt) available
- Instant on, no ballast to warm up
- No ultraviolet rays: Does not attract insects

Attractive design
- Recess mount installation
- Low profile - only 108mm (4-1/4") high for limited clearance applications
- One piece satin finish stainless steel trim
- Tempered, prismatic glass diffuser

Specifications

Model	Color Temperature	Lumens/ Watts	Kelvins	Initial Lumens
LED-L82-1040-CE-W	Warm White	92	3000	4877 Lumens
LED-L82-1040-CE-N	Natural White	93	4000	4925 Lumens

Do not use with dimmers.

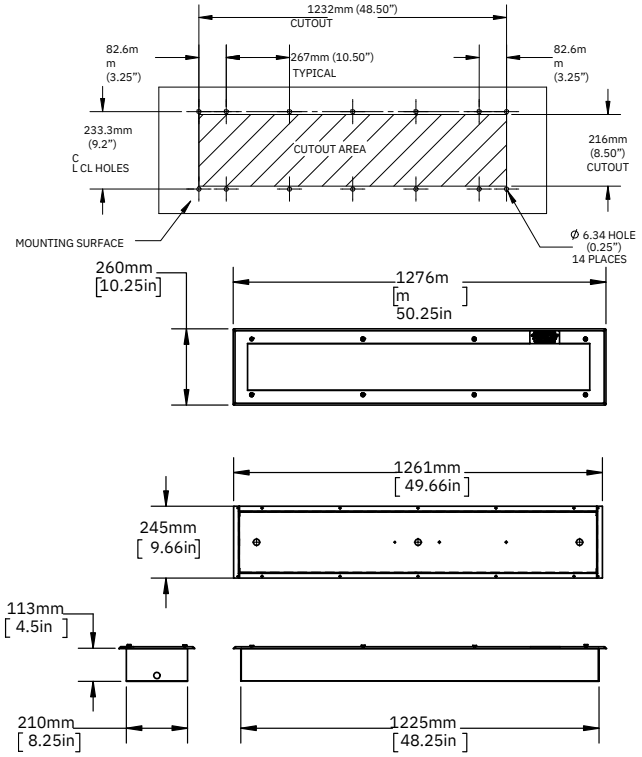

Dimensions shown in mm (inches) are for reference only and are subject to change.