opk E-Space wall mounting angle mounting instruction

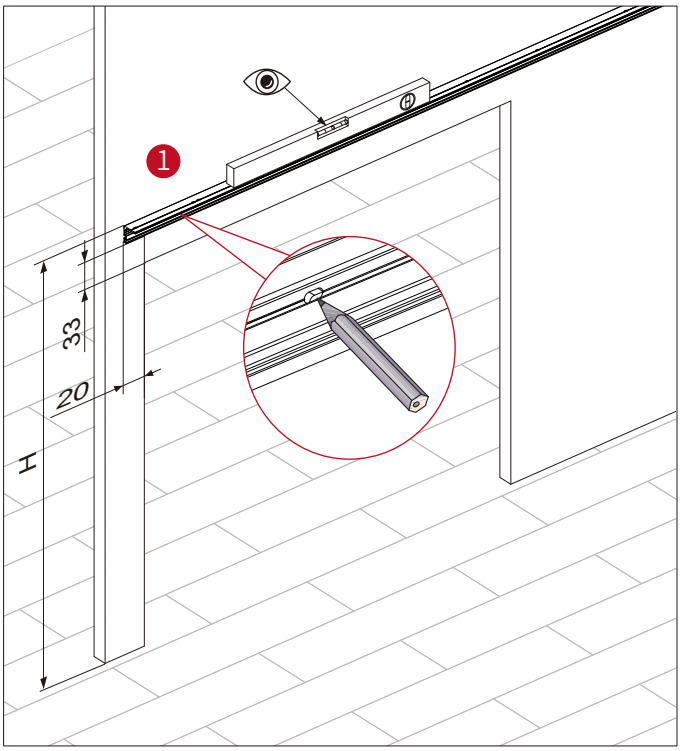

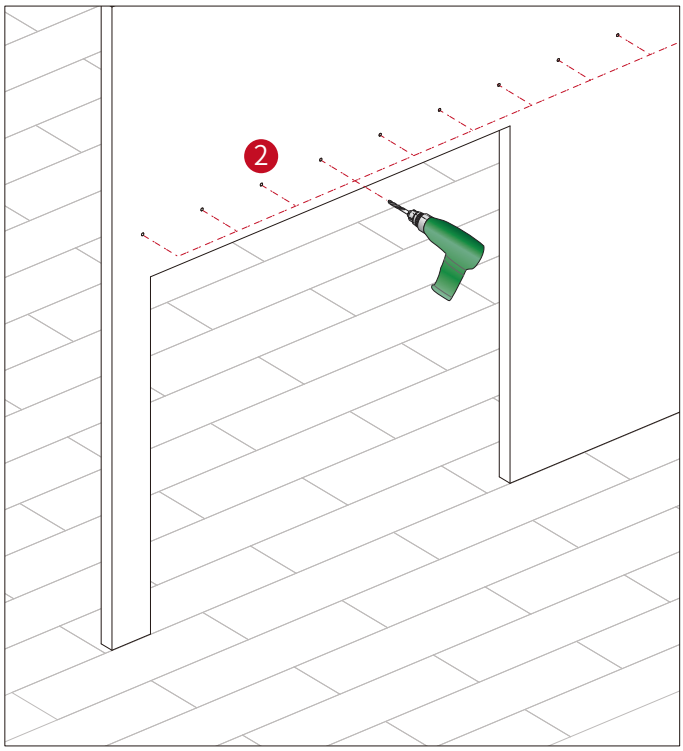

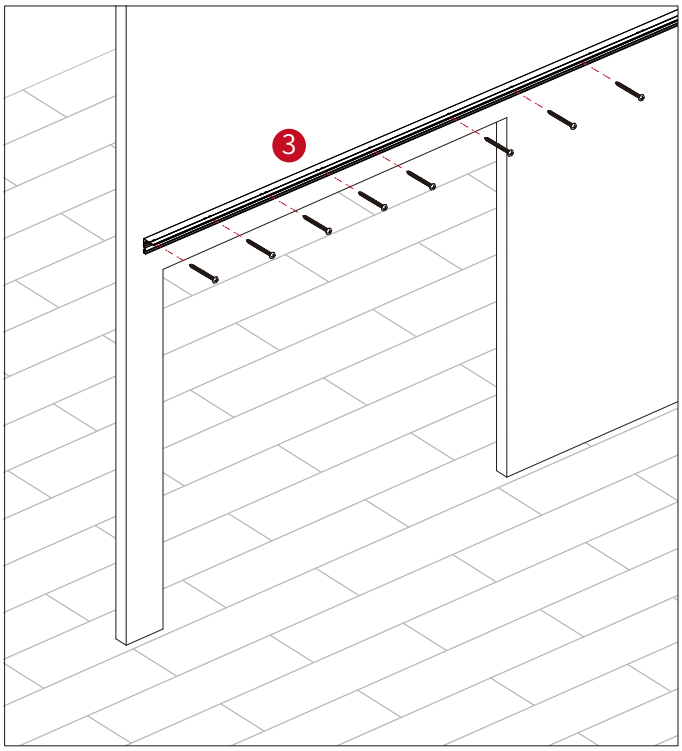

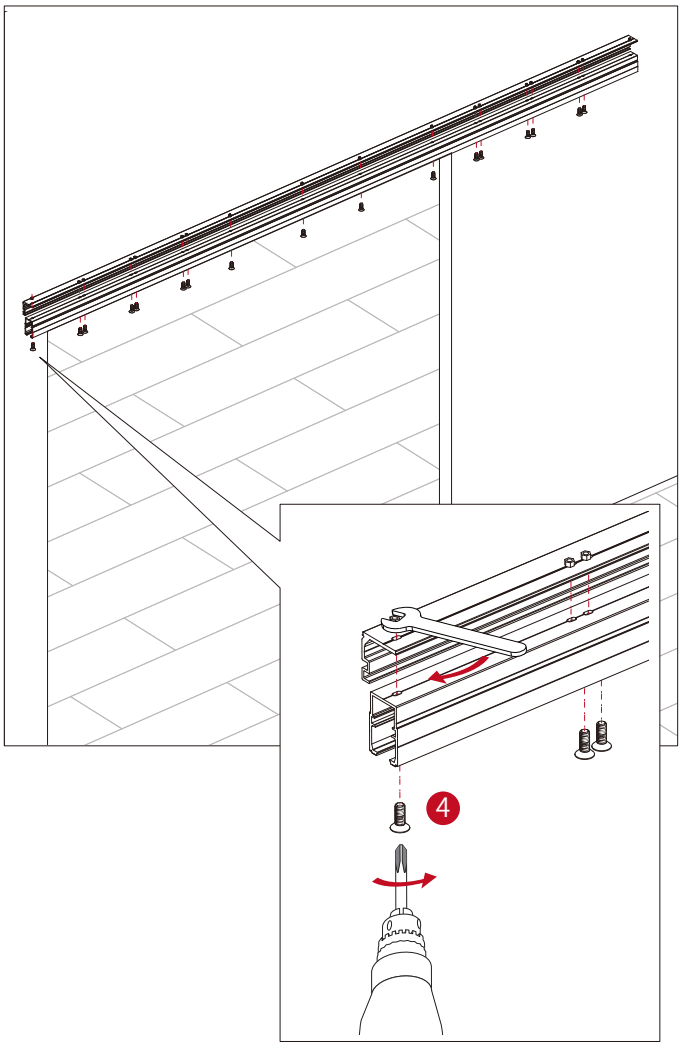

2023.04.28

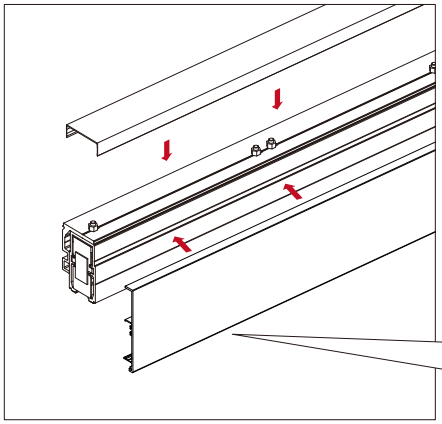

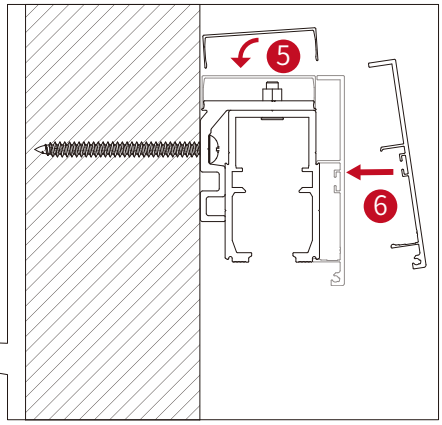
5
6

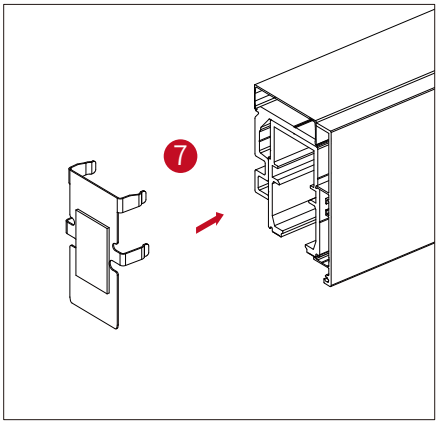
7

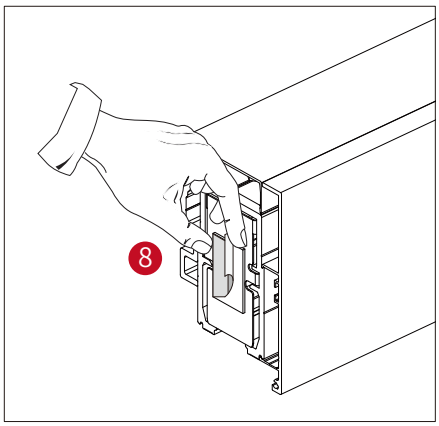
8

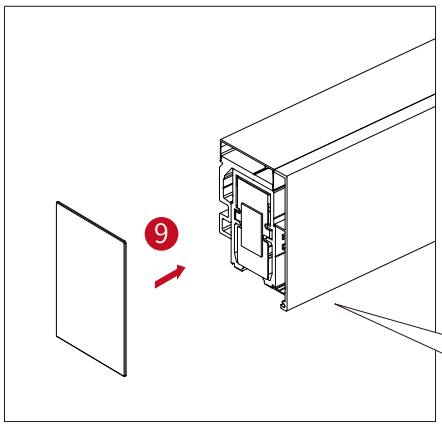
9

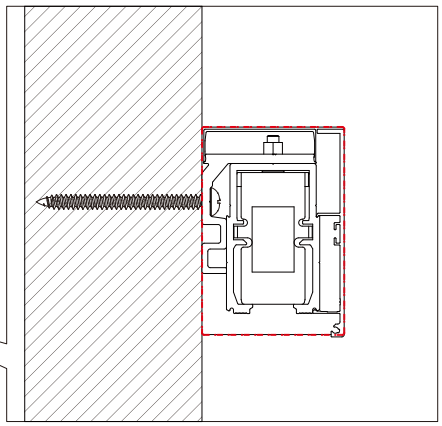

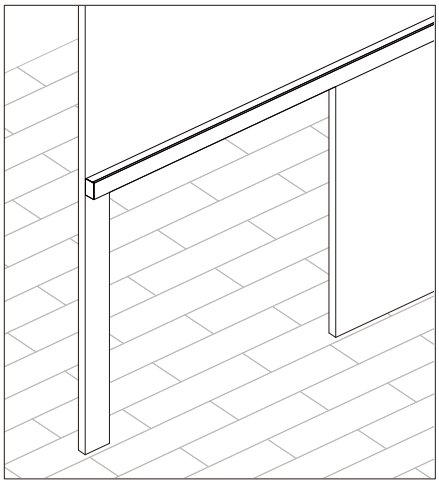

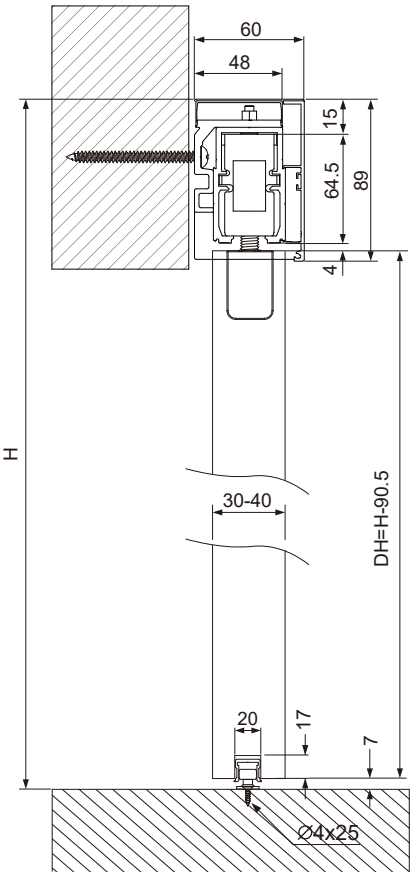
60
48
15
64.5
89
4
H
30-40
DH=H-90.5
20
17
7
Ø4x25

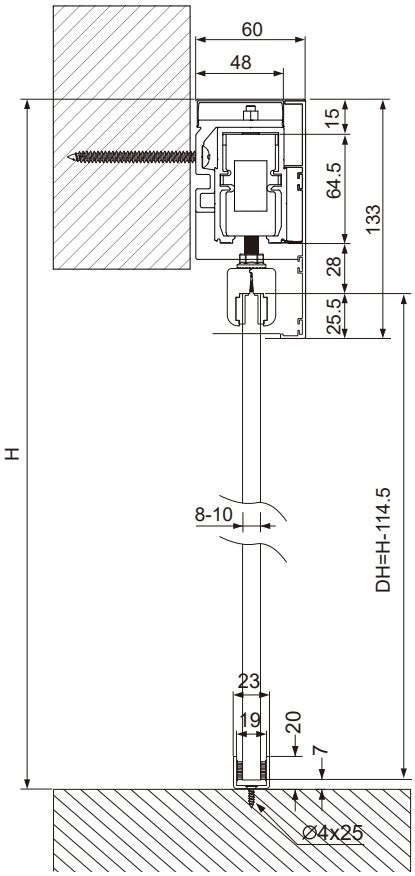
60
48
15
64.5
133
28
25.5
H
8-10
DH=H-114.5
23
19
20
7
Ø4x25