Product information

Silento Centratino

ZIMMER GROUP
Am Glockenloch 2
77866 Rheinau / Germany
T +49 7844 9110-0
F +49 7844 9110-6199
info@daempfungssysteme.de
www.zimmer-group.com

General data:

Type of product:	Self-closing unit with fluid damper
Origin:	Rheinau, Baden- Württemberg, Germany
Lifetime:	100.000 cycles
Installation option:	Sliding door Middle door

The Silento Centratino is the solution for damping and centering the middle sliding door of a cabinet. Due to its small dimensions this unit is able to be flexibly mounted onto the furniture. In combination with the “Silento Chiuso” a perfect closing image of the whole cabinet is attained.

Index

1. Content 3
2. Function 3
3. Technical data 4
4. Characteristics 4
5. Integration 5
6. Overlap of locking hooks 6
7. Accessory 7
8. Damping characteristic 8
9. Technical drawing 9
10. Test procedure 10
11. Materials 10

1. Content

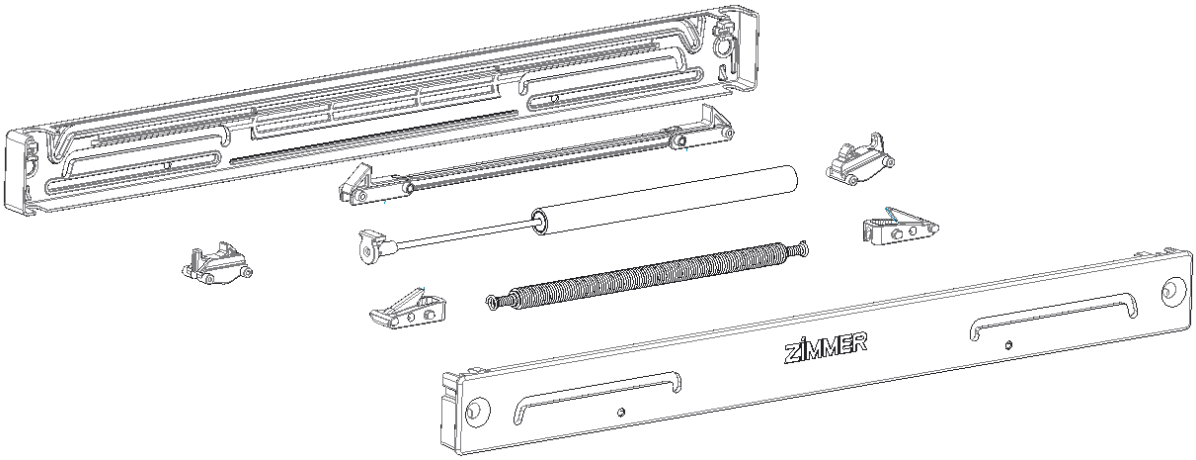

2. Function

The automatic self-closing unit Silento Centratino enables in an e. g. wardrobe with three sliding doors to retract the middle door noiseless in middle position and to leave it there. Due to its compact design this unit can be used in different rail systems.

The biggest advantage is the compact dimensions. Therefore this unit can be integrated invisibly at the running gear of the rail or as well into the door.

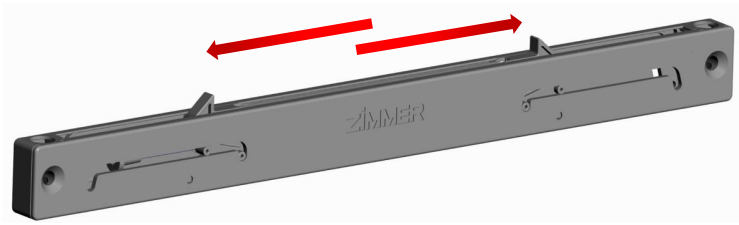

3. Technical data

Housing length [mm]:	270
Housing width [mm]:	12
Housing height (total height) [mm]:	24 (29,5)
Distance fixing points [mm]:	256
Ø of fixing holes / (frontal fitting) [mm]:	4,2 / (M4)
Stroke [mm]:	50
Weight to be braked [kg]:	15-50
Lifetime [cycles]:	100.000
Release:	-
Operating conditions [°C]	+10 <-> +40
Storage conditions [°C]	-20 <-> +80

4. Characteristics

Closed unit	☑
Effective direction outside closing	
Effective direction inside closing	☑
Fluid damper	☑
Air-friction damper	
Damping effect one-way	
Damping effect both-sided	☑
Different locking hooks possible	
Emergency function	

5. Integration

Main application:

Sliding door	☑
Drawer	
Hinge	
Flap	

Multiple orientation of the fixing possible	☑
Fixing hole with lowering	☑
Connection to running gear provided	
Mounting on running rail possible	☑
Retrofit	☑
Threaded nut possible for the fixation	☑

Possible integration:

6. Overlap of locking hooks

Self-closing without Zimmer activator

	Nominal dimensions *(Figures in mm)*	Tolerance range *(Figures in mm)*
A	124,50	-0,50
B	1,50	±0,50

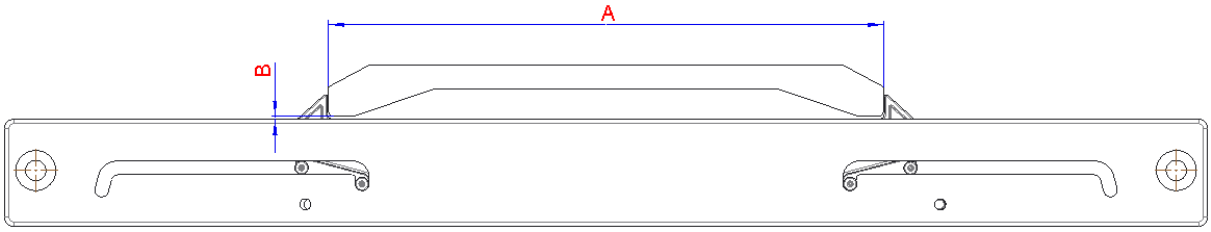

Note:
When using an own activator it is necessary to keep the dimensions A/B.

7. Accessory

Connection

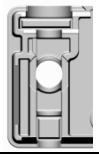	*Without threaded nut
	Vertical threaded nut

***Without threaded nut**

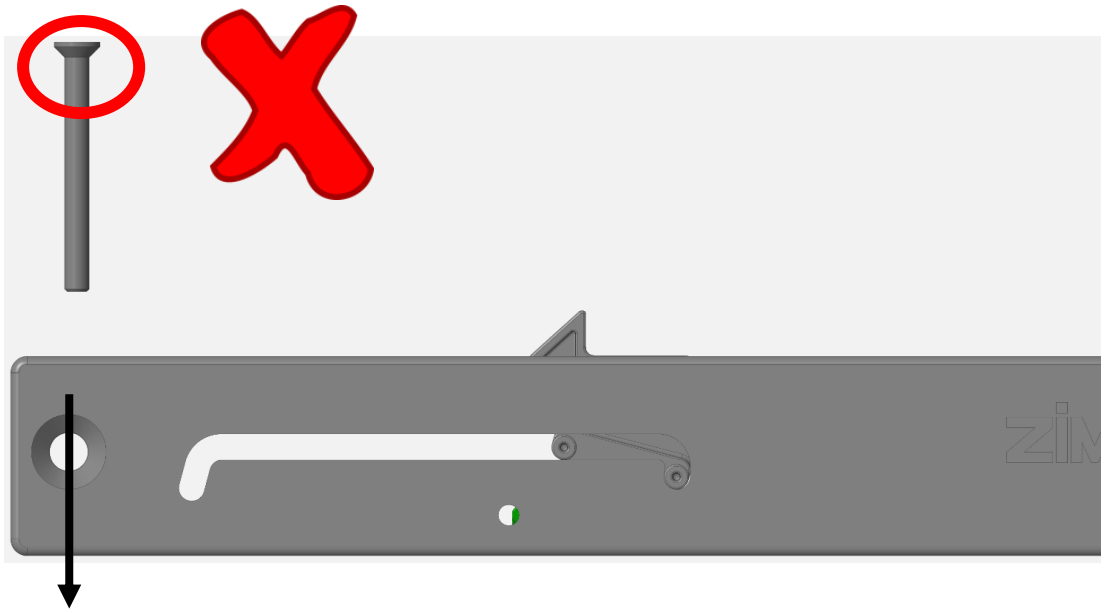

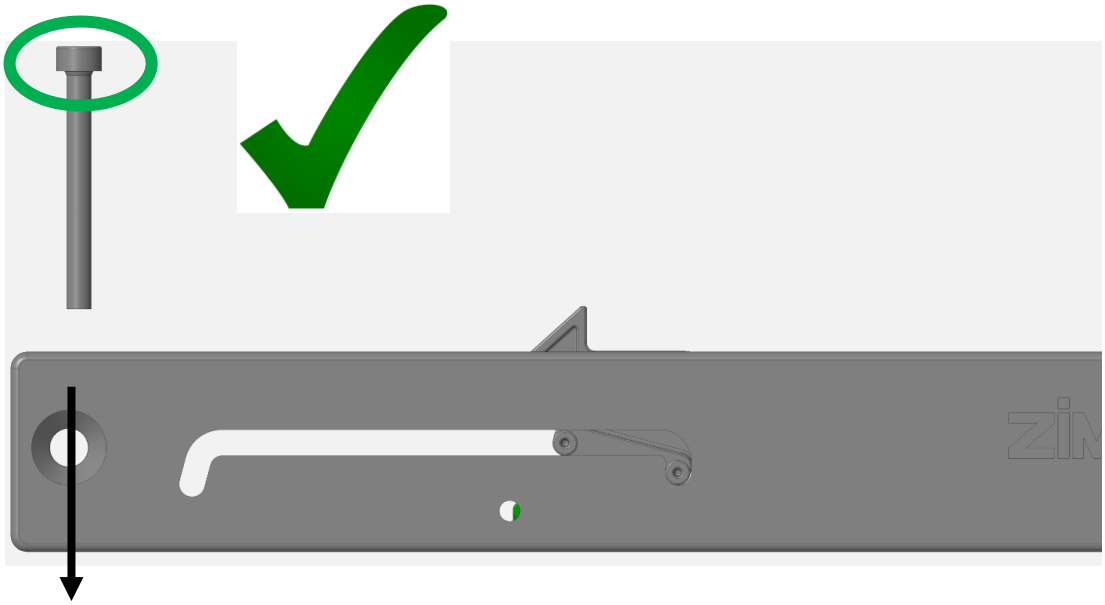

8. Damping characteristic

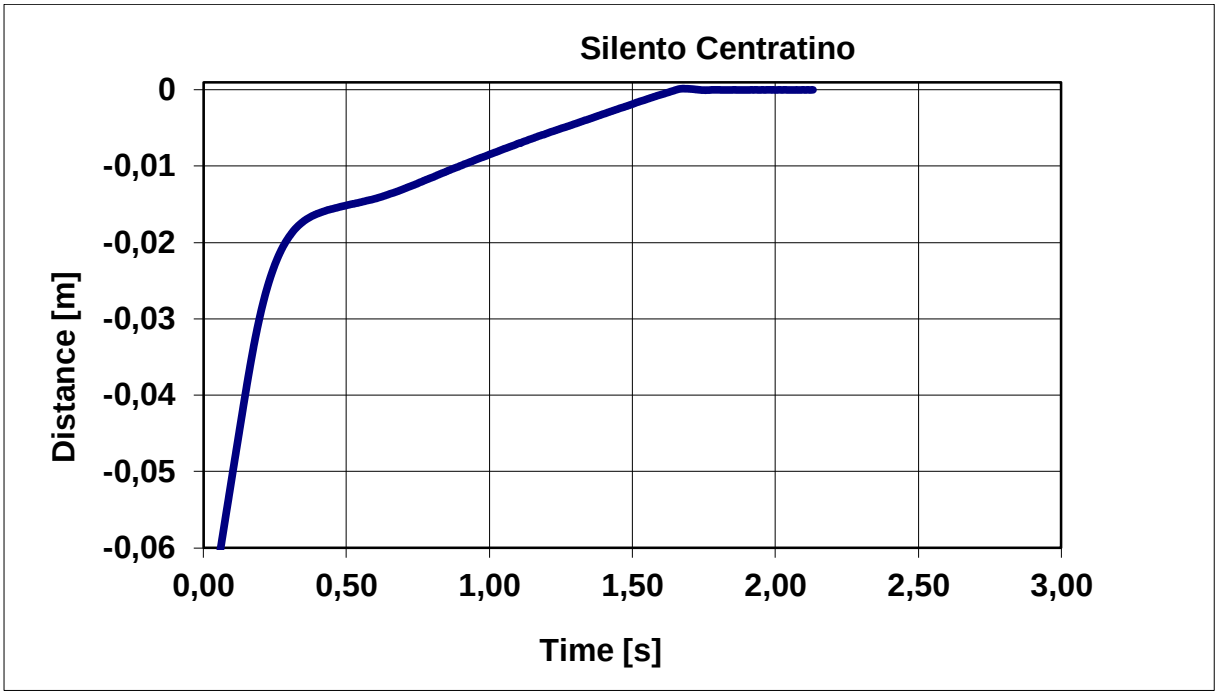

v ~ 0,25 m/s

9. Technical drawing

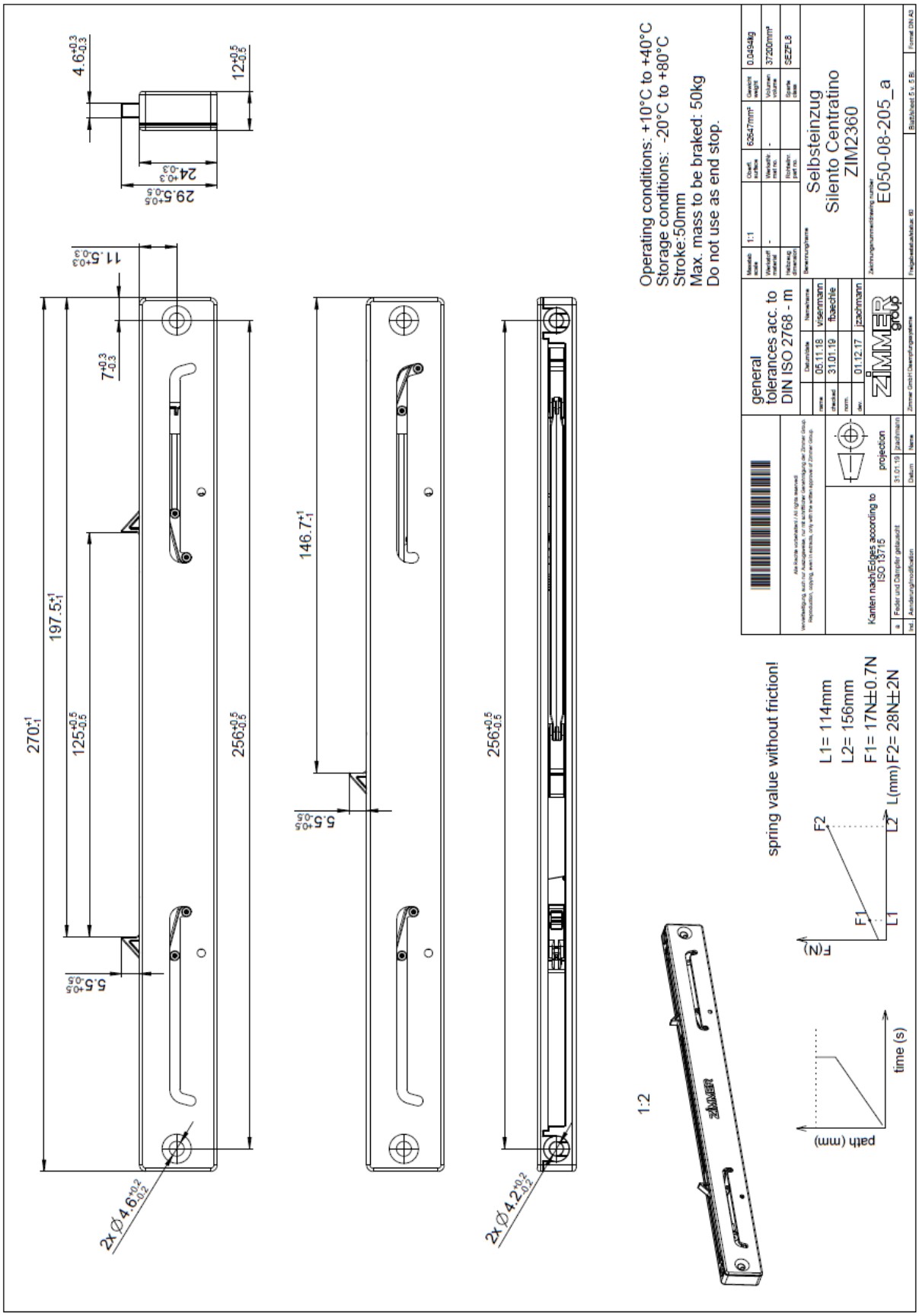

10. Test procedure

Test	Requirements according to Zimmer	Requirements Zimmer met
Long-term test	100.000 cycles	✓
Over stress test	10x ~1m/s	✓
Storage test	-20°C to 80°C	✓
Climate test	10°C to 40°C	✓

11. Materials

Selfclosing unit:

Housing:	PC/ABS
Hook:	Polyketon
Spring:	EN10270-1-DH