Product information

Retro 5

ZIMMER GROUP
Am Glockenloch 2
77866 Rheinau
T +49 7844 9110-0
F +49 7844 9110-6199
info@daempfungssysteme.de
www.zimmer-group.com

General data:

Type of product:	Self-closing unit with fluid damper
Origin :	Rheinau, Baden- Württemberg, Germany
Lifetime:	100.000 cycles
Installation option:	Sliding door Drawer

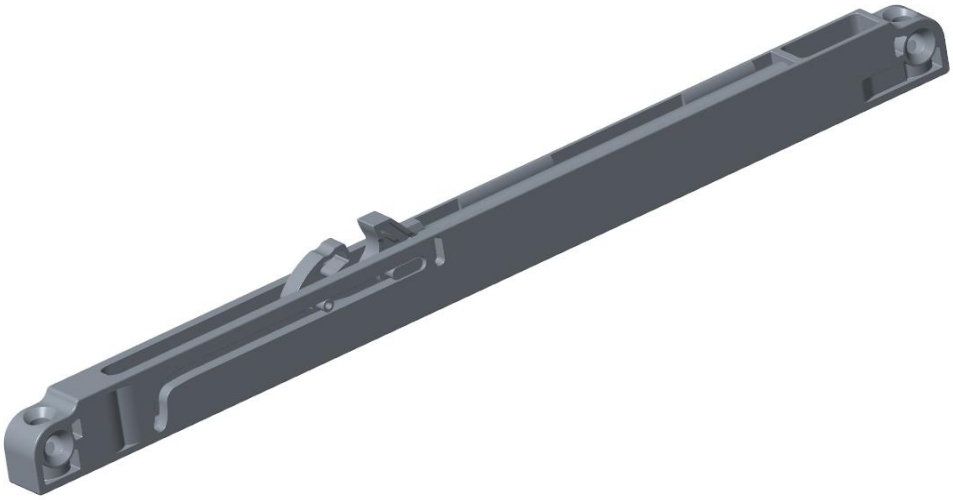

This unit offers a comfortable damping of different sliding doors and drawers.
Due to a very compact design it can be integrated into various systems. User-friendly connection options make it particularly flexible and versatile.

Index

1. Content 3
2. Function 3
3. Technical data 4
4. Characteristics 4
5. Integration 5
6. Overlap of the locking hook 6
7. Accessory 7
8. Damping characteristic 7
9. Technical drawing 8
10. Test procedure 9
11. Materials 9

1. Content

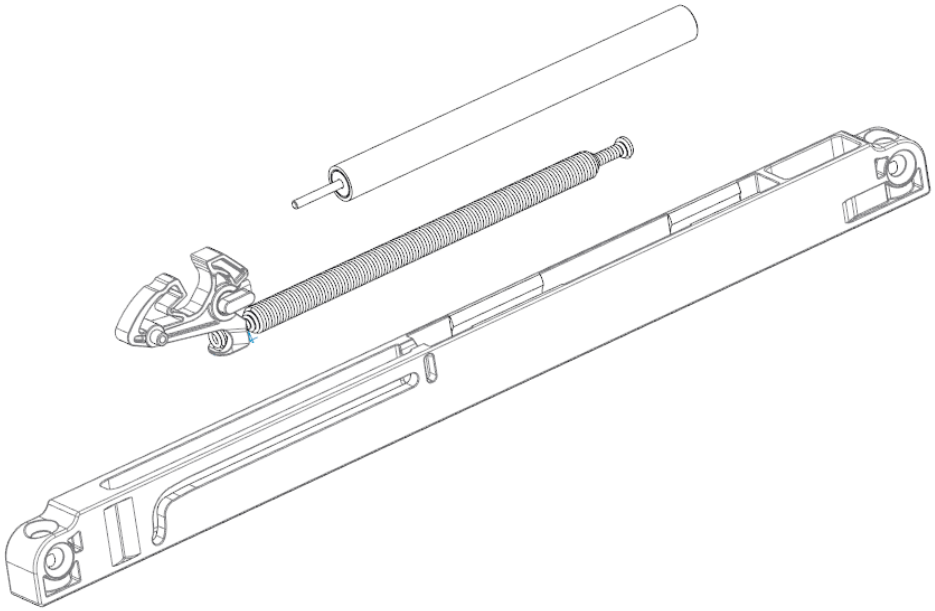

2. Function

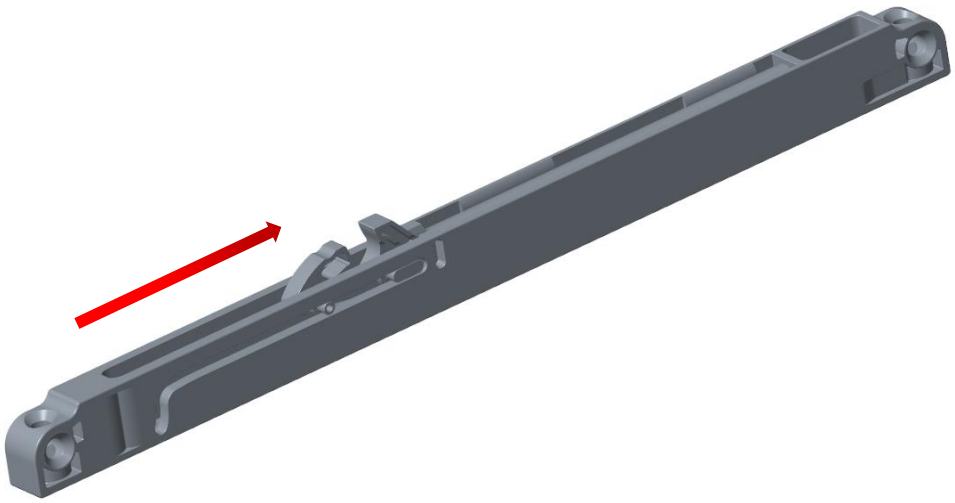

3. Technical data

Housing length [mm]:	237
Housing width [mm]:	10.4
Housing height (total height) [mm]:	17 (24.5)
Distance fixing points [mm]:	224
Ø of fixing holes [mm]:	4,2 / 4.6 / also from top 6.4
Stroke [mm]:	50
Weight to be braked [kg]:	up to 80
Lifetime [cycles]:	100.000
Release:	possible
Operating conditions [°C]	10 to 40
Storage conditions [°C]	-20 to 80

4. Characteristics

Closed unit	
Effective direction outside closing	
Effective direction inside closing	☑
Fluid damper	☑
Air-friction damper	
Damping effect one-way	☑
Damping effect both-sided	
Different locking hooks possible	☑
Emergency function	☑

5. Integration

Sliding door	☑
Drawer	☑
Hinge	
Flap	

Multiple orientation of the fixing possible	☑
Fixing hole with lowering	☑
Connection to running gear provided	
Mounting on running rail possible	☑
Retrofit	☑
Threaded nut possible for the fixation	

Do not use as end stop! Additional customer-side end stop necessary!

6. Overlap of the locking hook

With Zimmer activator

	Nominal dimensions *[Figures in mm]*	Tolerance range *[Figures in mm]*
B	1,5	±0,5
Y	68,0	-1,0
Z	32,0	±0,1

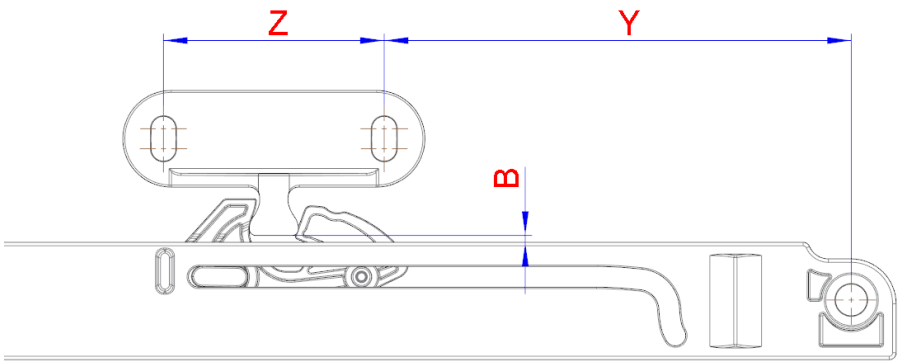

Without Zimmer activator

	Nominal dimensions *[Figures in mm]*	Tolerance range *[Figures in mm]*
A	87,5	-1,0
B	1,5	±0,5
C	7,0	±0,1

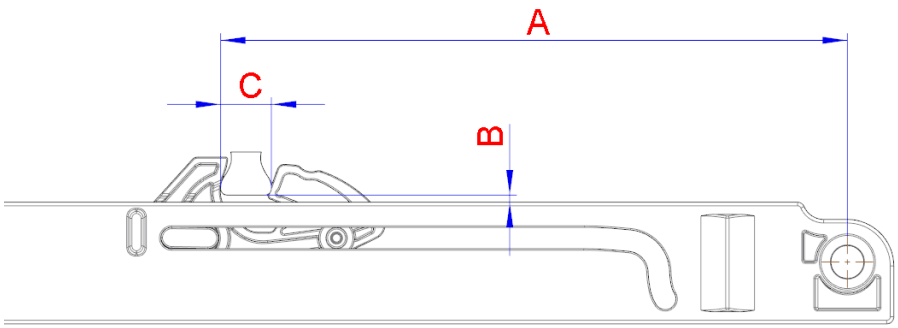

Note:
When using your own activator, make sure that the dimensions A / B / C are kept. The contour of the activator needs to be determined according to the arrangement with the company ZIMMER.

Actuator should have as little free space as possible in the locking hook!

7. Accessory

Locking hook

	Standard locking hook

Activator

	Activator (5-KUN81164)

8. Damping characteristic

distance/time → V= ~0,25m/s, weight 50 kg

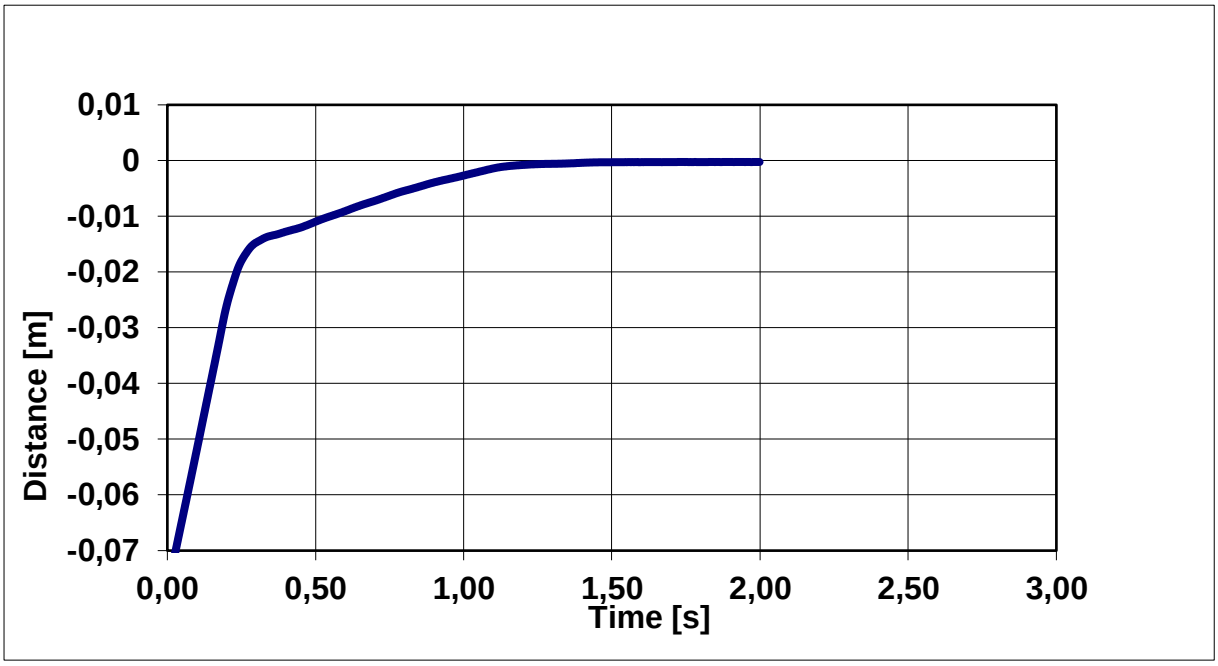

9. Technical drawing

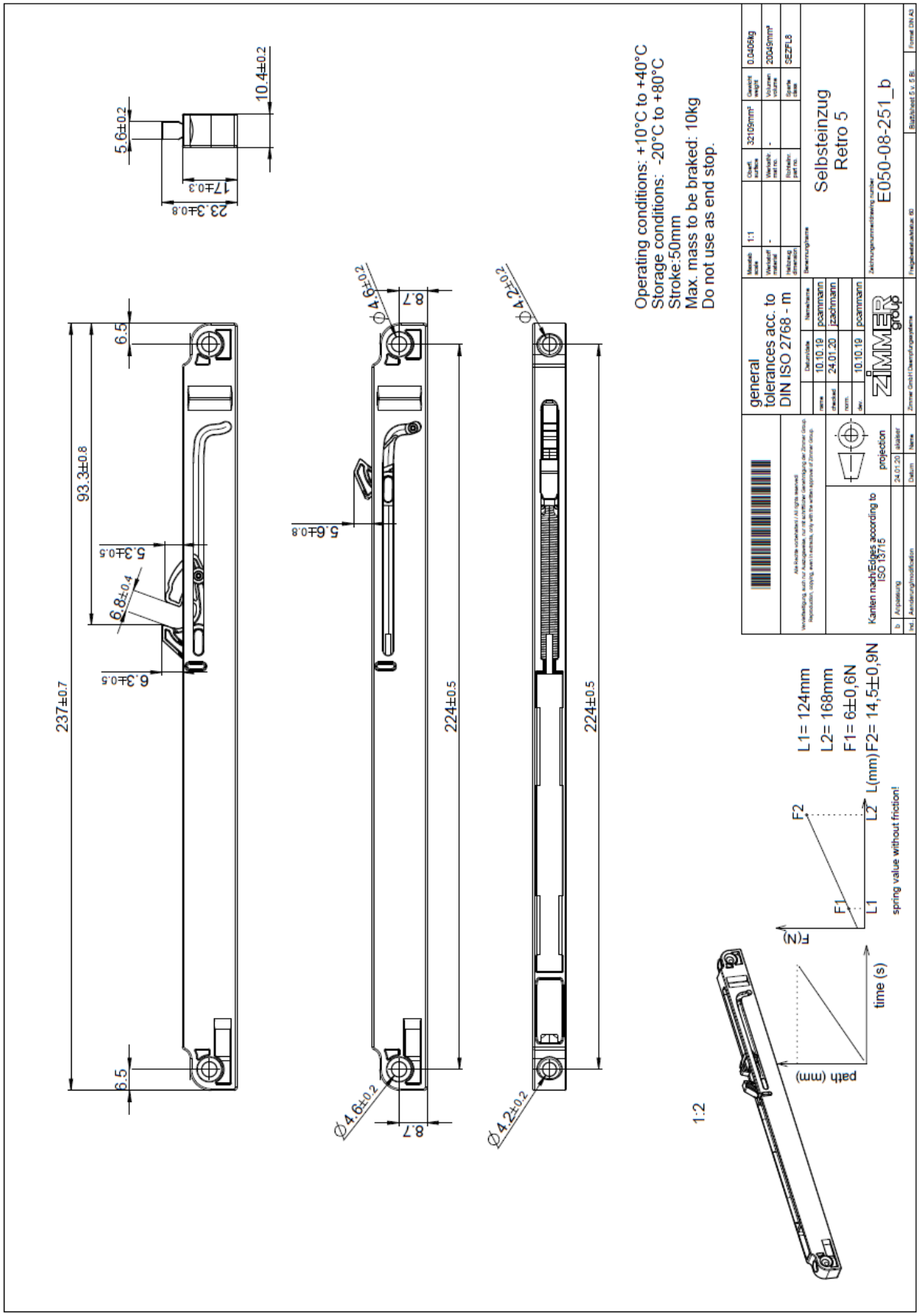

10.Test procedure

Test	Requirements according to Zimmer	Requirements Zimmer met
Long-term test	100.000 cycles	✓
Over stress test	10 x 1 m/s	✓
Storage test	-20°C to 80°C	✓
Climate test	10°C to 40°C	✓

11.Materials

Selfclosing unit:

Housing:	Pa6 GF30
Hook:	Polyketon
Spring:	EN10270-1-DH