drawn on the left (mirrored on the right)

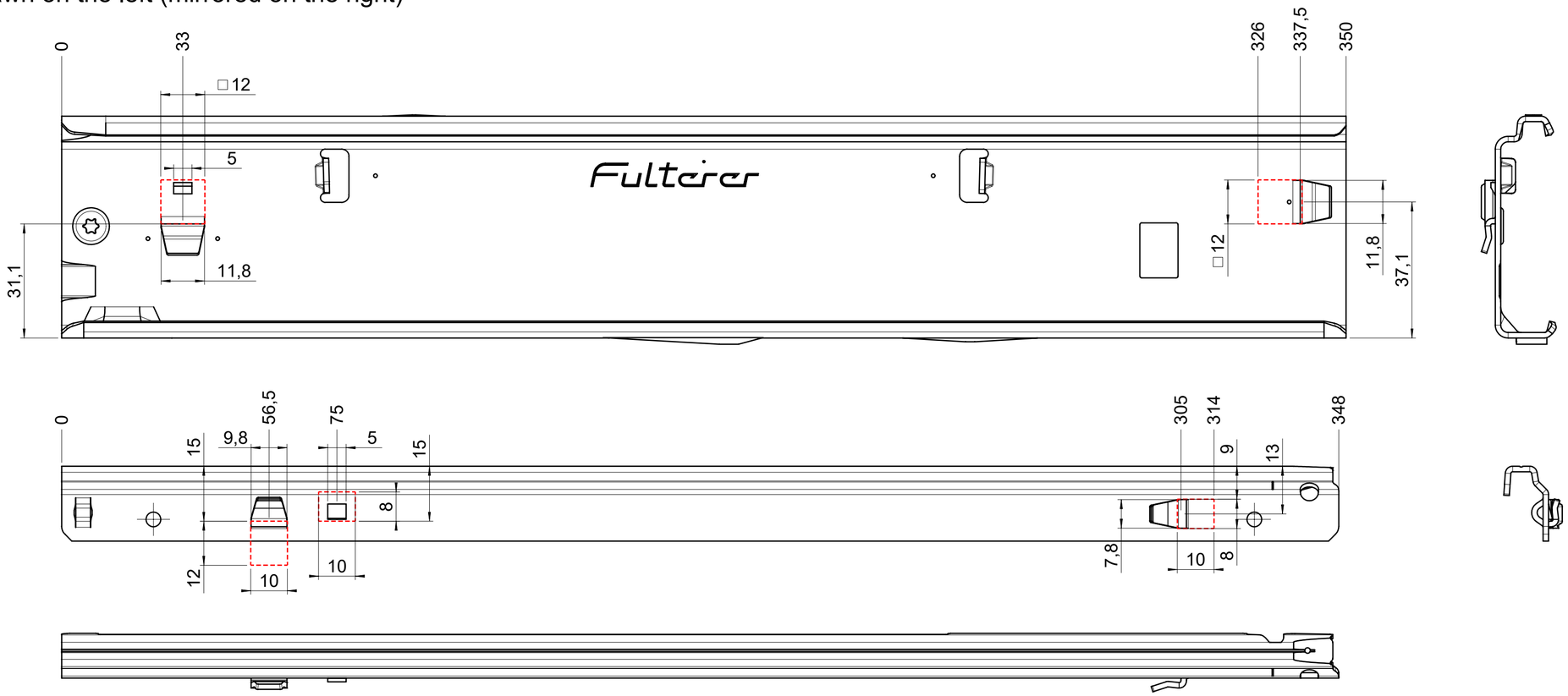

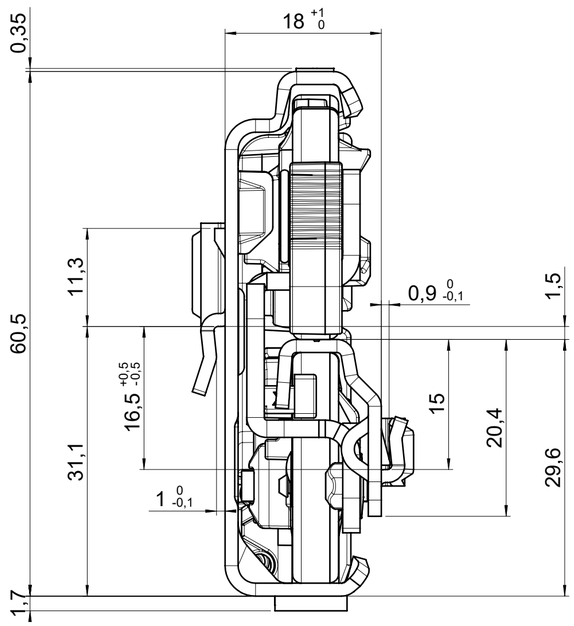

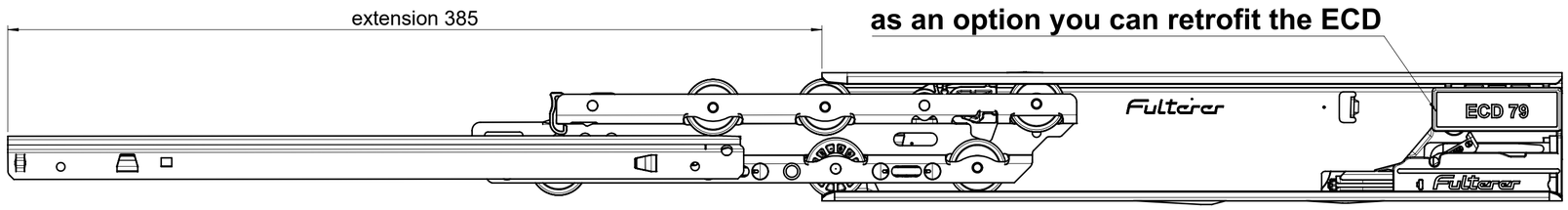

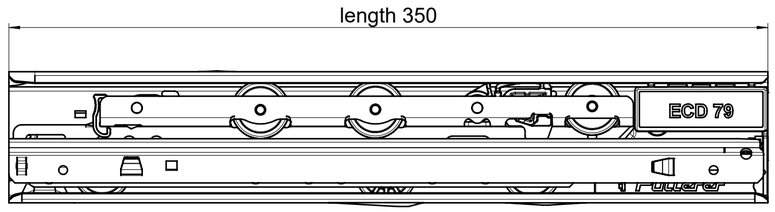

final approval	
	customer name:
	signed by:
	date:

all dimensions in mm

missing dimensions see 3D ⌭ = theor. intersection	DIN ISO 128-30	scale: 1:1	surface/color:	material: (technical requirements Fulterer) CS
released				description: **FR 795-350 CS EN (mm)** progressive-action over-extension drawerslide / side mount
			date / name: drawn 2024-03-19 RK; proven 2025-06-17 RK	
			Fulterer AG & Co KG, A-6890 Lustenau; Fulterer AG, CH-9430 St. Margrethen	drawing number: CS# 795.350-GA.L538
ⓐ mounting tab drawer profile	2024-09-26	RK		replaces the edition:
ind. changes	date	name		A2

This drawing remains our property and may not be multiplied neither be disclosed to third parties (§§1,3 and 5 from the copyright Act (UrhG)).

covered according to DIN ISO 16016