PRE RINSE SPRAY UNITS
WATER TAPS
SENSOR TAPS
BAR COUNTER TAPS
INFLOW TAPS
SAFETY HINGES FOR LIDS
DRAIN VALVES
SAFETY VALVES
HOSE REEL SYSTEMS

echtermann®
for professionals

Double Swivel ¾“ on pillar

- Stainless Steel 316L
- Both swivels arms 360° turnable
- Projection per swivel 300 mm / 400mm / 500mm
- Overall heights 281mm / 371mm / 571mm
- Single lever with high-flow cartridge ~42 l/min
- Connection by two copper pipes
- 15 years warranty on stainless steel body

echtermann®
for professionals

Double Swivel ¾“ on pillar

- Small pillar
- Medium pillar
- High pillar

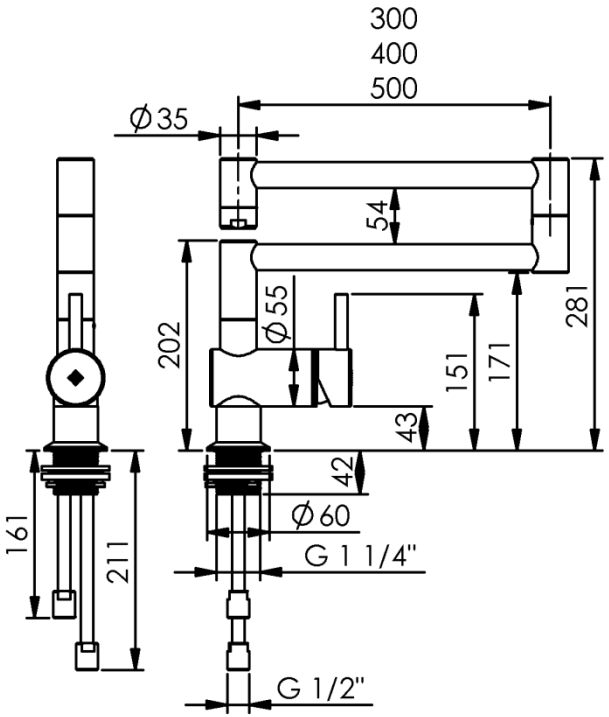

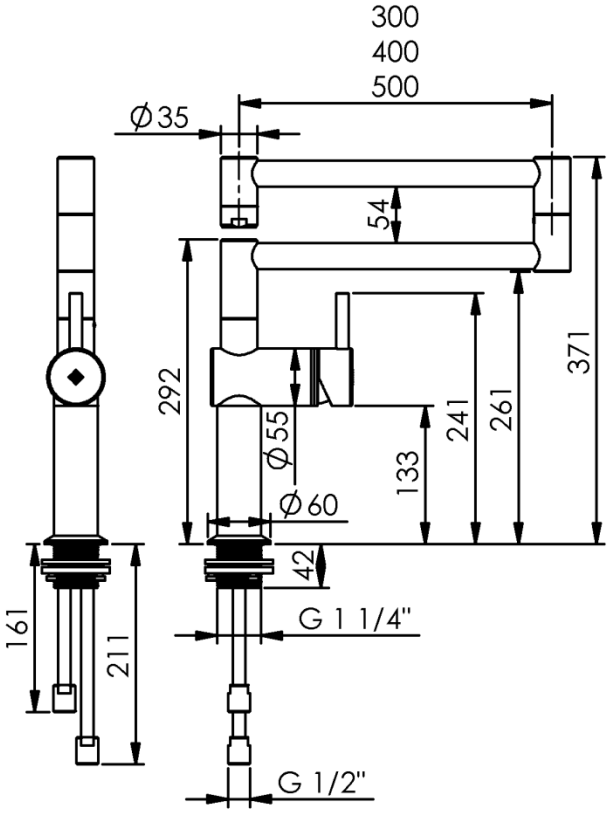

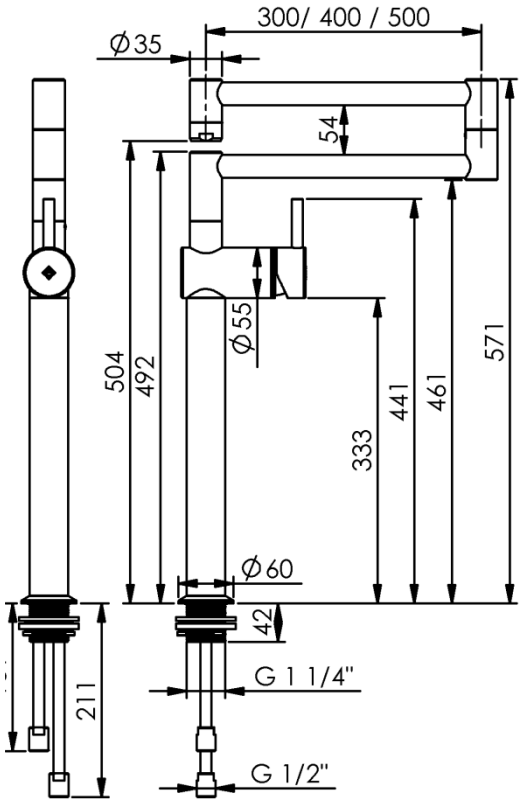

PRE RINSE SPRAY UNITS
WATER TAPS
SENSOR TAPS
BAR COUNTER TAPS
INFLOW TAPS
SAFETY HINGES FOR LIDS
DRAIN VALVES
SAFETY VALVES
HOSE REEL SYSTEMS

echtermann®
for professionals

Double Swivel ¾“ on pillar

SK Group (Sheraton owner) vip kitchen on MKN kitchen block in South-Korea – version 300mm / 300mm, medium height pillar