THE MOTION YOU TRUST

2020

DRAWER SLIDE SYSTEMS

FOR PROFESSIONAL APPLICATIONS

www.fulterer.com

Fulterer

2020

DRAWER SLIDE SYSTEMS

FOR PROFESSIONAL APPLICATIONS

Roller Bearing Drawer Slide Systems
Vertical Pantry Pull-Out Slide Systems
Stainless Steel Roller Bearing Drawer Slide Systems
Ball Bearing Drawer Slides

INNOVATIONS

Innovative Product Solutions

FULTERER is positioned in the global market and known as a leading manufacturer of robust and reliable drawer slide systems. Innovation driven product development occurs through close engagement with key equipment producers in a wide variety of industries and demanding applications. Continuous investments into state-of-the-art manufacturing equipment and tooling technology contribute to meet highest quality standards and cost efficiency.

Continuous investments into state-of-the-art manufacturing equipment and tooling technology contribute to meet highest quality standards and cost efficiency.

FULTERER does provide the widest range of drawer slide systems in its product portfolio. Even more FULTERER's product design and engineering team is highly committed to create customized product solutions tailored to a specific application requirement. In the in-house global R&D center motivated engineers create the ideal product in conjunction with customers and consumers. Flexibility and quick responsiveness by utilizing rapid prototyping solutions resulting in innovative new products and continuous product improvements. All new products are thoroughly performance and endurance tested in the advanced on-site testing laboratories prior to release in mass production.

QUALITY

Quality management
All FULTERER manufacturing locations are certified according to EN ISO 9001 standards. Continuous investments into tooling equipment, testing and measuring technology are contributing to meet best-in-class product quality and highest efficiency.

RoHS
‘Restriction of the use of certain Hazardous Substances’ is the directive on the use of certain hazardous substances. Our products comply with the RoHS directive and are manufactured in compliance with the latest EU regulations.

REACH
The company policy is to use only materials and processes which comply with the REACH Regulation. As a down-stream user, we have asked our suppliers to deliver us products according to the REACH Regulation and ‘if necessary’ to pre-registrate these products. We have asked our suppliers, when they, or their suppliers, don‘t pre-registrate to inform us and to offer a replacement for that product according to the REACH Regulation.

NSF (National Sanitation Foundation)
All FULTERER stainless steel drawer slide systems are NSF-tested and meet the highest hygiene standards for public health and safety in the food processing industry.

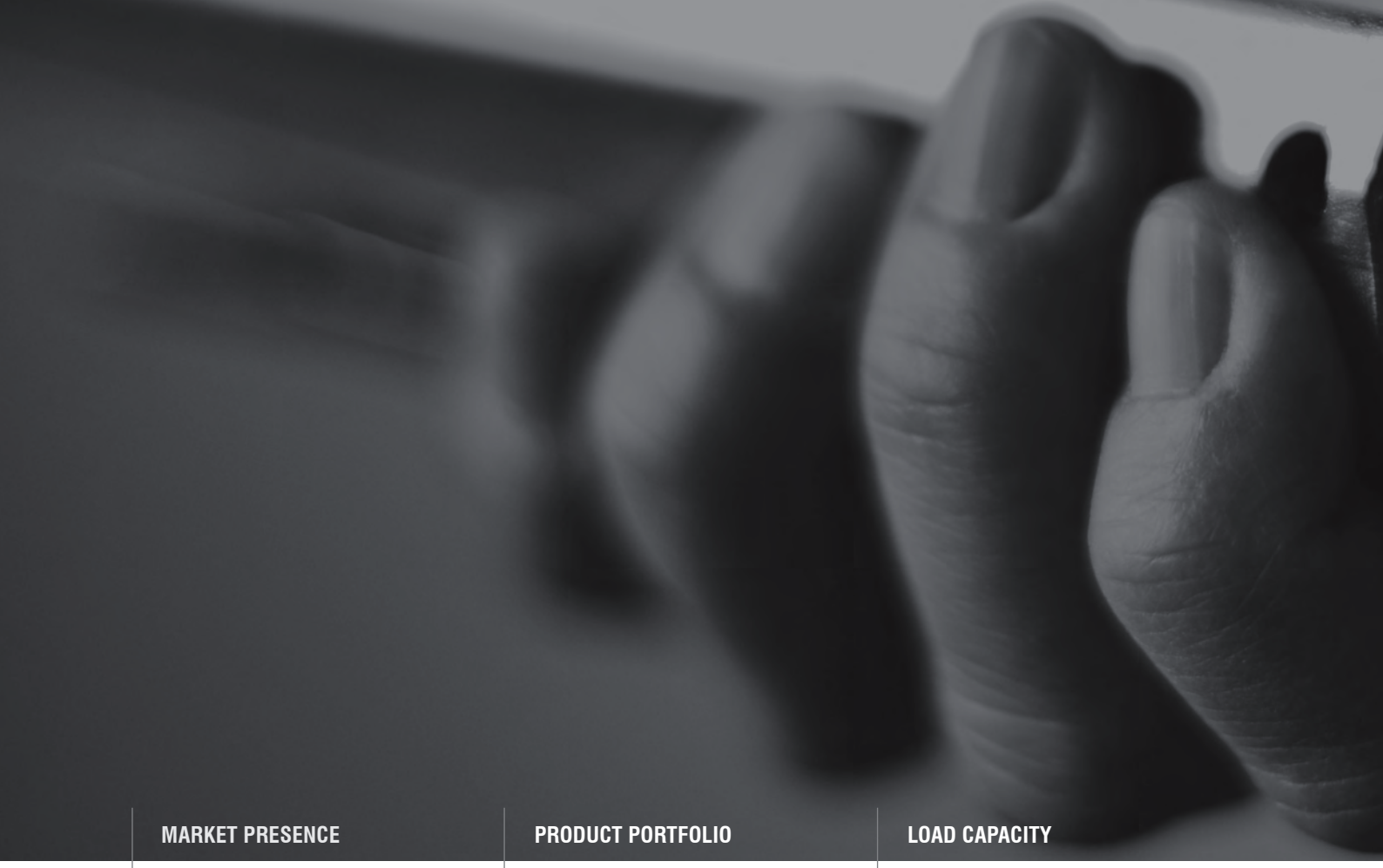

MARKET PRESENCE

Generally FULTERER products are marketed directly to Original Equipment Manufacturers.

FULTERER staff and distribution partners are available to you in worldwide five wholly owned locations in Austria, Switzerland, USA, China and Mexico and regional distributors globally. Application experts provide engineering support to determine the ideal product for each individual application.

PRODUCT PORTFOLIO

Our drawer slide systems are categorised into the following product groups:

- **Roller Bearing Drawer Slide Systems:** The roller components consists of either synthetic rollers, steel ball bearings or synthetic encased steel ball bearings.
- **Ball Bearing Drawer Slides:** The runner unit design is based of steel balls caged in a retainer.
- **Vertical Pantry Pull-Out Slide Systems**

LOAD CAPACITY

Generally, the load capacity is indicated by the values for the highest permissible dynamic load. The load capacity is factored of load weight, slide extension, and lifetime expectation respective number of duty-cycles. One duty-cycle is equal to one entire opening and closing of a drawer.

Attention: These values only apply with the use of suitable fasteners at all intended fastening positions.For the following dimensions, the specified load capacity values of each drawer slide system with the highest permissible dynamic load are:

- **Roller bearing drawer slides** for **600 mm extension length** and **450 mm drawer width.**
- **Ball bearing drawer slides** for **450 mm extension length** and **450 mm drawer width.**
- **In case of longer extension length (up to 1,000 mm),** the **load capacity is reduced by approx. 20 %.**
- **Roller Bearing Drawer Slide Systems:** FULTERER **roller bearing drawer slide systems** meet the dynamic test requirements of at least **50,000 cycles** at standard lengths of **600 mm** and standard mounting type under full rated load capacity.
- **Ball Bearing Drawer Slides:** FULTERER **ball bearing drawer slides** meet the dynamic test requirements of at least **50,000 cycles** at standard lengths of **450 mm** and standard mounting type under full rated load capacity.

MOUNTING OPTIONS

Besides various standard solutions also customized designs for the installation of drawer slide systems are available:

- **Mounting holes:** round, elongated or keyhole. Always in the centre of the profile, so that the screw heads do not interfere with rollers.
- **Bayonet tabs:** rapid assembly method for fitting of drawer slide systems to sheet metal cabinets and fixtures.
  Several types and sizes are available.
- **Hanging hooks:** a fast method of assembly of drawer slide systems to cabinets. An angle bracket on the cabinet profile hooks into a pilaster rail in the side of the cabinet.

INSTALLATION

Cabinet profile: Drawer slide systems are attached to the **side wall** of the cabinet with screws or mounting tabs on an inside wall of a cabinet, mostly using the 32 mm pitch.

Drawer profile:

- **Bottom mount:** The bottom edge of the drawer side is resting in the flange of the drawer profile. Both roller and ball bearing slides are available in this style.
- **Side mount:** The drawer profile is attached to the side of the drawer side or pull-out shelf. Both roller and ball bearing drawer slides are available in this style.

CLOSING METHODS

Self-closing (by gravity): Predominately with roller bearing slides where both cabinet and drawer profile are shaped on an angle at the rear to let the drawer roll closed in the last part of the closing travel.

ECD **Automatic self-closing with anti-slamming Easy Close Device (ECD):** This feature prevents the drawer from slamming shut by absorbing the initial closing force via a damping cylinder and utilizing aspring mechanism to complete the closing cycle with a very smooth and quiet closing action.

Available for the following temperature ranges:

ECD +5 to +40 °C

ECD -10 to +10 °C

ECD -25 to - 5 °C

INDEX

Type	Model	max. Load Capacity	Built-In Width	Mounting	Page
	ROLLER BEARING DRAWER SLIDE SYSTEMS				
Regular extension	FR 2021	35 kg	12 mm	bottom mount	**12**
	FR 2071	70 kg	15 mm	bottom mount	**13**
	FR 206	100 kg	16 mm	bottom mount	**14**
	FR 206 ECD	100 kg	16 mm	bottom mount	**15**
	FR 216	100 kg	24 mm	bottom mount	**16**
	FR 9000	200 kg	56 mm	bottom & side mount	**17**
Full extension	FR 6500	50 kg	12 mm	bottom mount	**19**
	FR 7180	200 kg	24 mm	bottom mount	**20**
Accessories	FULFIX II (Mounting Jig)				**21**
	FR 8001 ECD (Easy Close Device)	30 kg	12 mm	side mount	**22**
	FR 8003 ECD (Easy Close Device)	70 kg	12 mm	side mount	**23**
	VERTICAL PANTRY PULL-OUT SLIDE SYSTEMS				
Regular extension	FR 505-T	80 kg	73 mm	top mount	**26**
Full extension	FR 775A ECD	75 kg	88.5 mm	bottom & top mount	**27**
	FR 771A	120 kg	108 mm	bottom & top mount	**28**
	FR 777A	200 kg	124 mm	bottom & top mount	**29**
Accessories	FR 771A ECD (Easy Close Device)				**30**
	FR 777A ECD (Easy Close Device)				**31**
	STAINLESS STEEL ROLLER BEARING DRAWER SLIDE SYSTEMS				
Regular extension	FR 1051 SCC	50 kg	15 mm	side mount	**34**
	FR 1052 SCC	50 kg	18 mm	side mount	**35**
	FR 1052 SCC SC	50 kg	18 mm	side mount	**36**
	FR 2051 SCC	50 kg	15 mm	bottom mount	**37**
	FR 505 SCC	100 kg	15 mm	bottom mount	**38**
Full extension	FR 6010 SCC	50 kg	15 mm	side mount	**39**
	FR 785 SCC	60 / 48 kg	18 mm	side mount	**40**
	FR 785 SCC SC	60 / 48 kg	18 mm	side mount	**41**
	FR 786 SCC ECD	60 / 48 kg	18 mm	bottom mount	**42**
	FR 790 SCC	68 / 53 kg	18 mm	side mount	**43**
	FR 790 SCC SC	68 / 53 kg	18 mm	side mount	**44**
	FR 791 SCC	68 / 53 kg	18 mm	bottom mount	**45**
	FR 7100 SCC	120 / 105 kg	24 mm	bottom mount	**46**
	FR 7101 SCC	120 / 105 kg	24 mm	side mount	**47**
Accessories	ECD 78-S / ECD 78-C / ECD 78-F (Easy Close Device)				**48**
	FR 712 CNS (Locking System)				**49**

Type	Model	max. Load Capacity	Built-In Width	Mounting	Page
	BALL BEARING DRAWER SLIDES				
Full extension	FR 5000	45 kg	13 mm	side mount	**52**
	FR 5001 ECD	45 kg	12.8 mm	side mount	**53**
	FR 5002 CNS	45 kg	13.1 mm	side mount	**54**
	FR 5036	30 kg	13 mm	side mount	**55**
	FR 5052	90 kg	13 mm	side mount	**56**
	FR 5400	250 kg	19.5 mm	side mount	**57**
	FR 5400L	250 kg	19.5 mm	side mount	**58**
	FR 5426	350 kg	26 mm	side mount	**59**
	FR 5432	220 kg	32 mm	side mount	**60**
	FR 5439	500 kg	39 mm	side mount	**61**
	FR 5609	95 kg	19.1 mm	side mount	**62**
	FR 5609 OE	115 kg	19.1 mm	side mount	**63**
	FR 5826	300 kg	26 mm	side mount	**64**
Two-way regular extension	FR 5328	400 kg	13 mm	side mount	**65**
Accessories	FR 5000 ASW (Side Mount Bracket)		14 mm	side mount	**66**
	FR 5400 ASW (Side Mount Bracket)	250 kg		side mount	**67**
	FR 8100 (Locking Handle)				**68**

Regular extension drawer slide systems, the drawers **cannot be completely extended;** part of it remains in the cabinet. Regular extension drawer slide systems are a **low-cost, economical solution.**

Product features:
- dynamic load capacity from 30 to 100 kg
- nominal lengths from 300 to 1,500 mm
- powder coated or galvanised surface

Full extension drawer slide systems, the drawer can be **fully extended,** with over extension even beyond the front edge of the cabinet.

Progressive action drawer slide systems provide the smoothest running performance. The load in the drawer is equally supported during the full stroke from close to open and vice versa. **Telescopic action full extension drawer slide systems** function incrementally through stages.

Product features:
- high dynamic load capacity from 30 to 200 kg
- nominal lengths from 200 to 1,200 mm
- powder coated or galvanised surface

Regular and full extension drawer slide systems are available in customized design.

12 | 23

ROLLER BEARING DRAWER SLIDE SYSTEMS

- REGULAR EXTENSION
- FULL EXTENSION
- ACCESSORIES

FR 2021 | Regular Extension Drawer Slide with Lateral Stability

Specifications

- bottom mount
- 12 mm
- dynamic up to 35 kg
- solid synthetic rollers
- steel, powder coated

Characteristics

- integrated side adjustment – clearance adjustable up to 2 mm
- double hole system on cabinet profile for offset attachment to thin inside walls
- oblong holes in the cabinet profile permit easy height adjustments
- out stop detent
- single-sided captive profile (left)
- self-closing
- compatible with full extension drawer slide FR 6500 and pitch of 32 mm

Dimensions

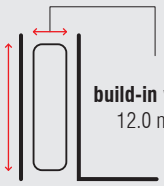

Length	Extension	Weight	Item No.
		per set	pure white
mm	mm	kg	
300	215	0.50	▸ **7065**
350	265	0.58	▸ **7066**
400	300	0.67	▸ **7067**
450	350	0.73	▸ **7068**
500	400	0.82	▸ **7069**
550	430	0.91	▸ **7070**
600	480	0.99	▸ **7071**
650	530	1.09	▸ **7072**
700	560	1.17	▸ **7082**

Packing Unit – Sets per Box, all Lengths: 20

▸ in stock

FR 2071 | Regular Extension Drawer Slide with Lateral Stability

Specifications

- bottom mount
- 15 mm
- dynamic up to 70 kg
- synthetic silent rollers
- steel, powder coated

Characteristics

- cabinet profile with synthetic stop
- out stop detent
- single-sided captive profile (right)
- self-closing

Dimensions

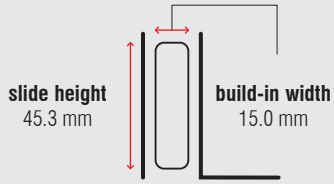

Length	Extension	Weight	Item No.
		per set	pure white
mm	mm	kg	
300	212	0.86	▸ **1349**
350	262	1.09	▸ **1350**
400	302	1.13	▸ **1351**
450	352	1.27	▸ **1352**
500	402	1.41	▸ **1353**
550	432	1.54	▸ **1354**
600	482	1.69	▸ **1355**
650	532	1.83	▸ **1356**
700	582	1.97	▸ **1357**
750	612	2.10	▸ **1358**
800	662	2.25	▸ **1359**
850	712	2.41	▸ **1360**
900	742	2.52	▸ **1361**
950	792	2.61	▸ **1362**
1,000	842	2.81	▸ **1363**

Packing Unit – Sets per Box, all Lengths: 10

▸ in stock

FR 206 | Regular Extension Drawer Slide

Specifications

- bottom mount
- 16 mm
- dynamic up to 100 kg
- steel ball bearings or solid synthetic rollers
- steel, zinc plated or powder coated

Characteristics

- stay-closed feature
- out stop detent
- steel rear stop
- zinc plated – steel ball bearings; powder coated – solid synthetic rollers

Dimensions

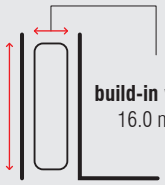

Length	Extension	Weight	Item No.	Item No.
		per set	zinc plated	pure white
mm	mm	kg		
300	209	1.41	▸ **4064**	*
350	259	1.64	▸ **4065**	▸ **4079**
400	294	1.86	▸ **4066**	▸ **4080**
450	344	2.10	▸ **4067**	▸ **4081**
500	394	2.32	▸ **4068**	▸ **4082**
550	444	2.55	▸ **4069**	▸ **4083**
600	494	2.76	▸ **4070**	▸ **4084**
650	544	2.97	▸ **4071**	▸ **4085**
700	564	3.23	▸ **4072**	▸ **4086**
750	614	3.41	▸ **4073**	*
800	654	3.66	▸ **4074**	▸ **4087**
850	704	3.96	▸ **4075**	*
900	744	4.18	▸ **4076**	▸ **4088**
950	794	4.39	▸ **4077**	*
1,000	834	4.64	▸ **4078**	▸ **4089**

Packing Unit – Sets per Box: from 300 to 550 mm: **10** | from 600 to 1,000 mm: **7**

▸ in stock | * on request

FR 206 ECD | Regular Extension Drawer Slide

ECD

Specifications

- bottom mount
- 16 mm
- dynamic up to 100 kg
- steel ball bearings
- steel, zinc plated

Characteristics

- stay-closed feature
- out stop detent
- cabinet profile with synthetic stop

Dimensions

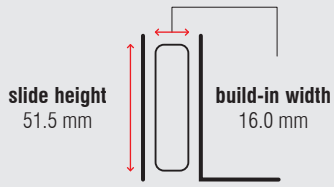

Length	Extension	Weight	Item No.
		per set	zinc plated
mm	mm	kg	
400	294	2.25	▸ **4303**
450	344	2.48	▸ **4304**
500	394	2.71	▸ **4305**
550	444	2.93	▸ **4306**
600	494	3.15	▸ **4307**
650	544	3.38	▸ **4308**
700	564	3.63	▸ **4309**
750	614	*	*
800	654	4.08	▸ **4311**
850	704	*	*
900	744	4.53	▸ **4313**
950	794	*	*
1,000	834	5.08	▸ **4315**

Packing Unit – Sets per Box, all Lengths: 2

▸ in stock | * on request

FR 216 | Regular Extension Drawer Slide

NEW

Specifications

- bottom mount
- 24 mm
- dynamic up to 100 kg
- synthetic encased steel ball bearings
- steel, powder coated or zinc plated

Characteristics

- world's strongest regular extension drawer slide with a load capacity of 100 kg up to a length of 1,500 mm
- dual ball bearings for more stability and longevity
- dual-sided captive profile
- cabinet profile with synthetic stop

Dimensions

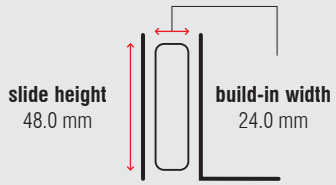

Length	Extension	Weight	Item No.	Item No.	Item No.
	zinc plated	per set	zinc plated	black	white aluminium
mm	mm	kg			
600	460	3.44	*	*	▸ **4001**
650	500	*	*	*	*
700	540	3.98	*	*	▸ **4003**
750	580	*	*	*	*
800	620	4.57	*	*	▸ **4005**
850	660	*	*	*	*
900	700	5.11	*	*	▸ **4007**
950	740	*	*	*	*
1,000	780	5.65	*	*	▸ **4009**
1,050	820	*	*	*	*
1,100	860	*	*	*	*
1,150	900	*	*	*	*
1,200	940	7.25	*	*	▸ **4013**
1,250	970	*	*	*	*
1,300	1,010	*	*	*	*
1,350	1,050	*	*	*	*
1,400	1,080	*	*	*	*
1,450	1,120	*	*	*	*
1,500	1,160	8.93	*	*	▸ **4019**

Packing Unit – Sets per Box: from 600 to 750 mm: **5** | from 800 to 1,000 mm: **4** | from 1,050 to 1,500 mm: **2**

▸ in stock | * on request

FR 9000 | Regular Extension Aluminium Drawer Slide

Specifications

- cabinet profile
- drawer profile
- 56 mm
- dynamic up to 200 kg
- solid synthetic rollers and synthetic encased steel ball bearings
- aluminium

Characteristics

- modular sliding system for a wide variety of applications
- The special interior shape of the profile compensates installation inaccuracies in width, height and angular direction.
- centerline groove to mark the holes
- The system FR 9000 can be obtained completely assembled or all parts individually to be fabricated by the user enabling to produce odd sizes with the individual components.

Dimensions

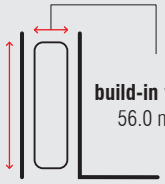

Length	Extension	Item No.	Length	Extension	Item No.
mm	mm		**mm**	mm	
450	315	*	**1,300**	910	*
500	350	*	**1,400**	980	*
550	385	*	**1,500**	1,050	*
600	420	*	**1,600**	1,120	*
650	455	*	**1,700**	1,190	*
700	490	*	**1,800**	1,260	*
750	525	*	**1,900**	1,330	*
800	560	*	**2,000**	1,400	*
850	595	*	**2,100**	1,470	*
900	630	*	**2,200**	1,540	*
950	665	*	**2,300**	1,610	*
1,000	700	*	**2,400**	1,680	*
1,100	770	*	**2,500**	1,750	*
1,200	840	*			

Minimum order quantity, pricing and lead time on request

* on request

FR 9000 | Regular Extension Aluminium Drawer Slide

Example FR 9000 Regular Extension

- 2 outer profiles with 4 stops and 2 carriers
- 2 inner profiles with 2 carriers
- all profiles have the same length, extension to one side

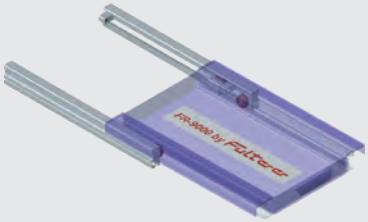

Example FR 9000 Regular Extension

- 2 outer profiles with 4 stops
- 2 inner profiles with 4 carriers
- different lengths of profiles, extension to both sides

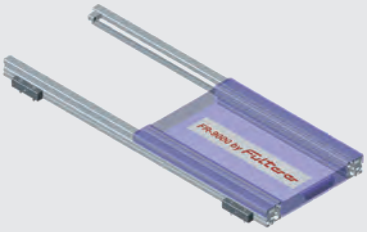

Example FR 9000 Table Extension

- 2 outer profiles with 6 stops
- table top with carriers arranged in pairs

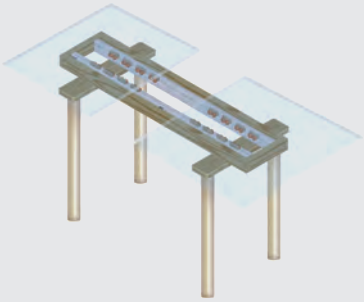

Individual Components for Fabricators		Item No.
Extruded Profile	Length 6,140 mm	▸ **9201**
Set for regular extension	2 pcs. tolerance compensating roller carriers (red), 2 pcs. ball bearing carriers (white), 4 pcs. stops, 16 pcs. M6x20mm bolts (DIN7984), 24 pcs. M6 square nuts (DIN557)	▸ **9200**

Assembled Regular Extension Slide	Length	Extension	Weight	Item No.
			per set	
	mm	mm	kg	
FR 9000	**1,600**	1,120	*	*
FR 9000	**1,900**	1,330	*	*
FR 9000	**2,300**	1,610	*	*

Minimum order quantity, pricing and lead time on request

▸ in stock | * on request

FR 6500 | Over Extension Telescopic Action Drawer Slide

Specifications

- bottom mount
- 12 mm
- dynamic up to 50 kg
- solid synthetic rollers, synthetic silent rollers
- steel, powder coated

Characteristics

- lateral stability
- absorbing soft stop and lift out prevention clip installed
- easy mounting and removal of middle profile
- with standard over extension
- dual-sided captive profile
- self-closing
- compatible with regular extension drawer slide FR 2021 and pitch of 32 mm

Dimensions

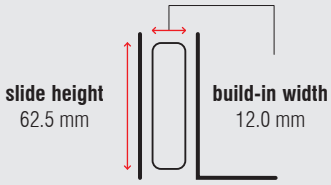

Length	Extension	Weight	Item No.
		per set	pure white
mm	mm	kg	
200	200	0.70	▸ **1200**
250	250	0.87	▸ **1201**
300	320	1.03	▸ **1202**
350	370	1.21	▸ **1203**
400	420	1.37	▸ **1204**
450	470	1.55	▸ **1205**
500	550	1.74	▸ **1206**
550	570	1.93	▸ **1207**
600	620	2.11	▸ **1208**
650	670	2.48	▸ **1260**
700	750	2.60	▸ **1261**
750	770	2.86	▸ **1262**
800	820	3.06	▸ **1263**

Packing Unit – Sets per Box, all Lengths: 10

▸ in stock

FR 7180 | Full Extension Progressive Action Drawer Slide

Specifications

- bottom mount
- 24 mm
- dynamic up to 200 kg (full extension)
- solid synthetic rollers
- steel, zinc plated or powder coated

Characteristics

- high lateral stability
- ideal running characteristic and smoothness of running through integrated progressive action
- integrated safety clip
- dual-sided captive profile
- self-closing

Dimensions

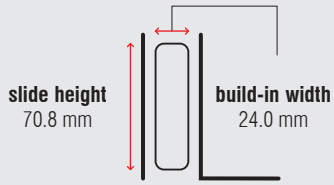

Length	Extension	Weight	Item No.	Item No.
	full extension	per set	zinc plated	lightgray
mm	mm	kg		
400	385	3.64	▸ **7150**	*
450	435	4.11	▸ **7151**	*
500	485	4.57	▸ **7152**	*
550	535	5.04	▸ **7153**	*
600	585	5.50	▸ **7154**	*
650	635	5.97	▸ **7155**	*
700	685	6.43	▸ **7156**	*
750	735	6.90	▸ **7157**	*
800	785	7.36	▸ **7158**	*
850	835	7.83	▸ **7159**	*
900	885	8.29	▸ **7160**	*
950	935	8.76	▸ **7161**	*
1,000	985	9.22	▸ **7162**	▸ **7182**
1,200	1,185	11.50	*	▸ **7184**

Packing Unit – Sets per Box: from 400 to 600 mm: **4** | from 650 to 1,000 mm: **2** | 1,200 mm: **1**

▸ in stock | * on request

FULFIX II | Mounting Jig

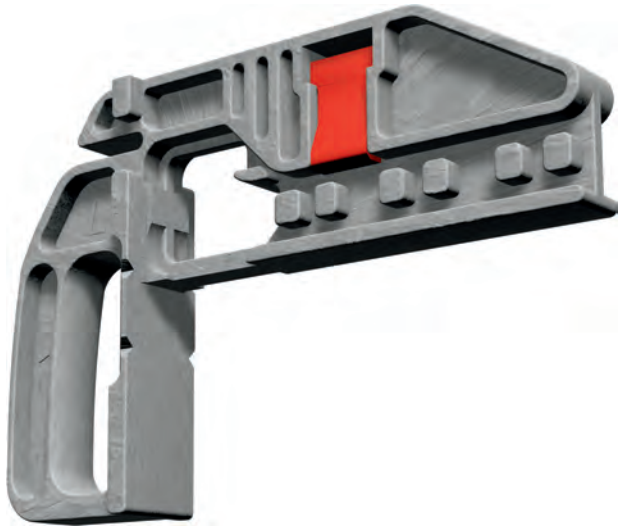

Specifications

synthetic material

Characteristics

- suited for the cabinet profiles of FR 2021 and FR 6500
- clamping device assures a perpendicular and square fit onto the cabinet side
- for overlay or insert drawer fronts (19 mm setback)

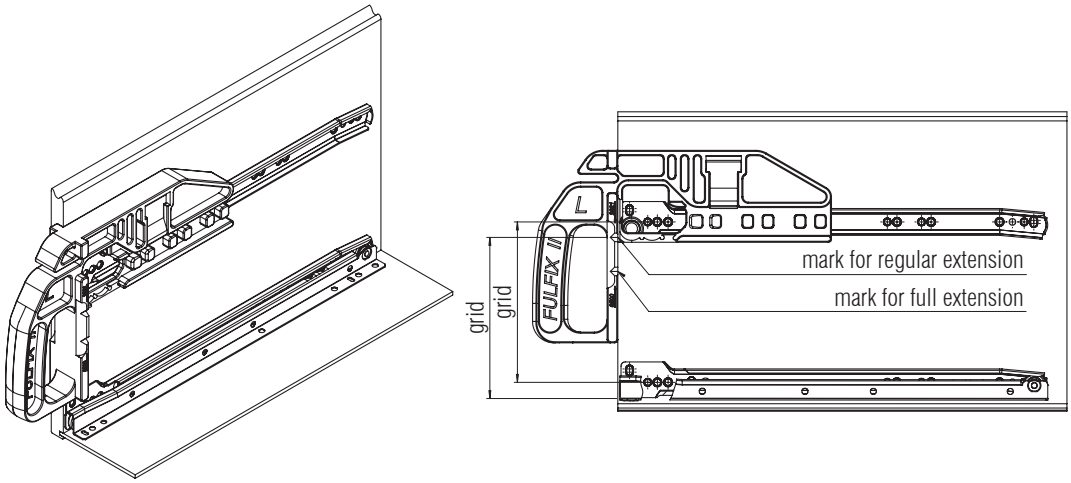

Designation	Weight	Item No.
	kg	
FULFIX II	0.34	▸ **3000**

Packing Unit – Piece: 1

▸ in stock

FR 8001 ECD | Easy Close Device for Regular Extension Drawer Slides

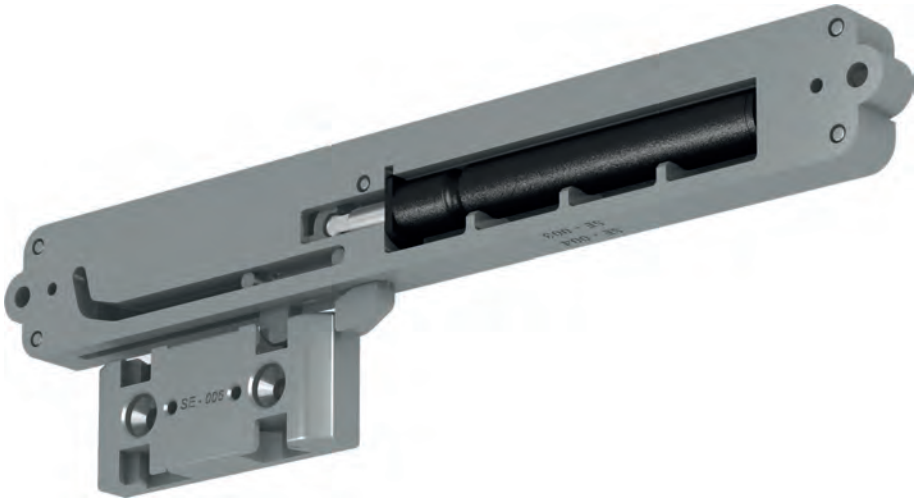

Specifications

- side mount
- 12 mm
- dynamic up to 30 kg
- synthetic material, steel
- +10 °C to +40 °C

Characteristics

- can be used in combination with any drawer slide with a minimum of 12 mm side clearance
- drawer is softly pulled shut from approximately 30 mm

Delivery Set

- 2 pieces spring and damping cylinder
- 2 pieces latch
- 1 piece mounting instruction
- 1 piece mounting set

mounting diagram

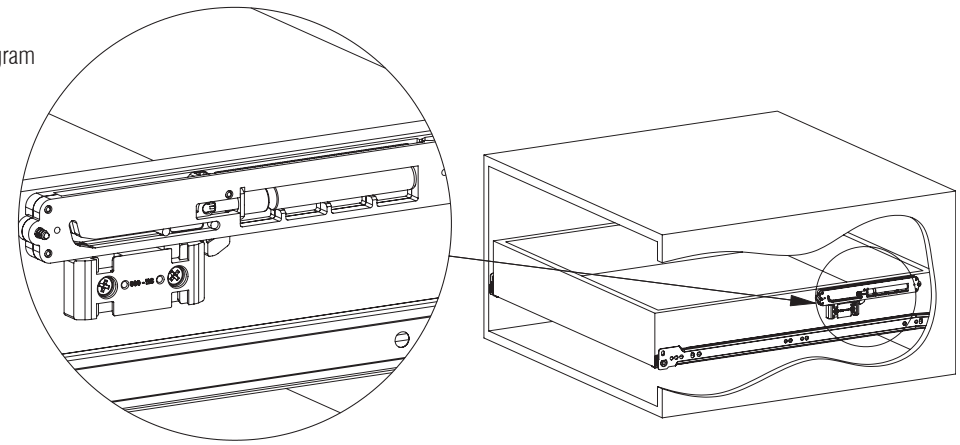

Designation	Item No.
FR 8001 ECD	**8001**

Packing Unit – Set per Box: 1

in stock

FR 8003 ECD | Easy Close Device for Regular Extension Drawer Slides

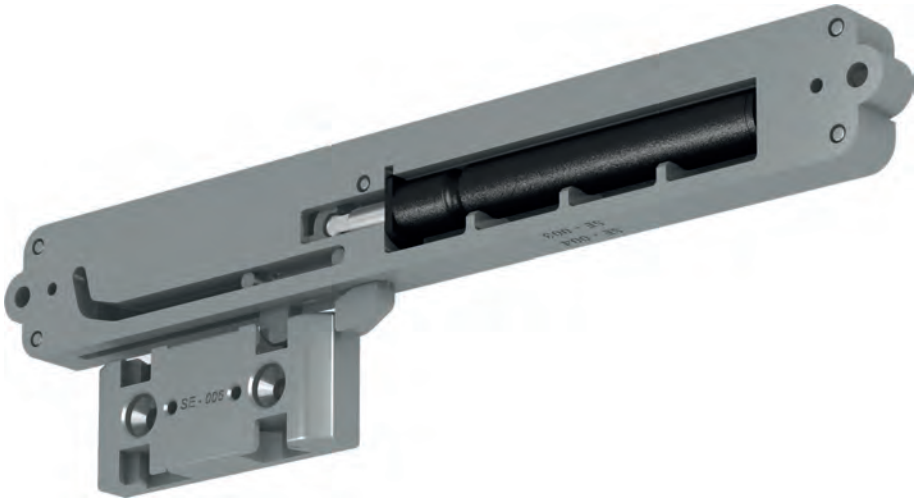

Specifications

- side mount
- 12 mm
- dynamic up to 70 kg
- synthetic material, steel
- +5 °C to +40 °C

Characteristics

- can be used in combination with any drawer slide with a minimum of 12 mm side clearance
- drawer is softly pulled shut from approximately 30 mm

Delivery Set

- 2 pieces spring and damping cylinder
- 2 pieces latch
- 1 piece mounting instruction
- 1 piece mounting set

mounting diagram

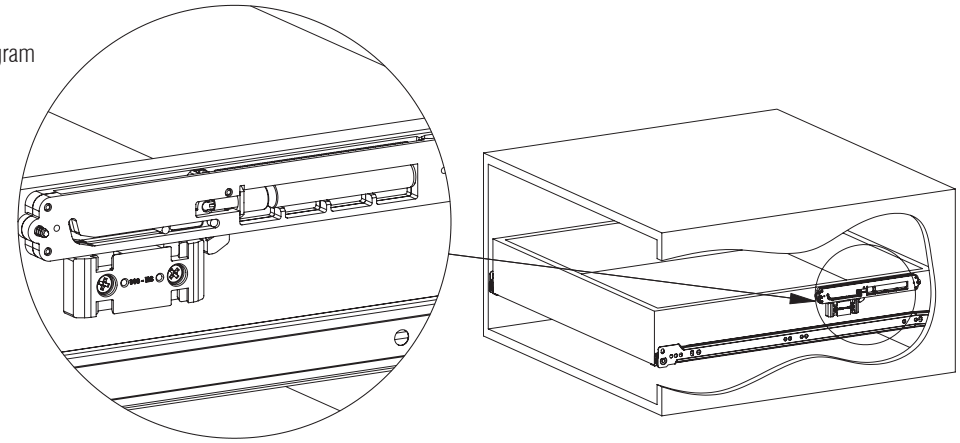

Designation	Item No.
FR 8003 ECD cold-resistant	**8003**

Packing Unit – Set per Box: 1

in stock

In addition to the standard product range, FULTERER does offer a wide variety to meet your **individual customized applications.** We work closely with customers and provide **expertise and application know-how** in partnership collaborations.

The **regular extension vertical pull-out slide system FR 505-T** for ceiling-mounting has a load capacity of up to 80 kg and is the optimum solution for the attachment of display boards in showrooms and product display areas.

The **full extension progressive action vertical pull-out slide systems FR 775A ECD, FR 771A and FR 777A** are perfect systems for pull-out cupboards in home, kitchen, pharmacy and laboratory applications, as well as for archive cabinets and vertical cupboards for office furniture.

VERTICAL PANTRY PULL-OUT SLIDE SYSTEMS

- REGULAR EXTENSION
- FULL EXTENSION
- ACCESSORIES

FR 505-T | Door Display Slide
Regular Extension Vertical Pull-Out Slide

Specifications

- top mount
- min. 73 mm
- dynamic up to 80 kg
- synthetic encased steel ball bearings
- steel, powder coated

Characteristics

- for use in all types of showrooms and shops with display walls, door panels etc.
- lateral stability
- light, rigid and silent movement via special roller assembly
- simple assembly via countersunk fixing holes for M6 countersunk screws
- built-in friction stop in the closed and extended position

Dimensions

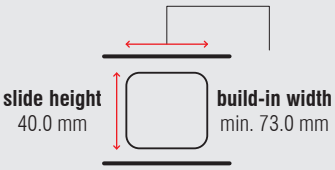

Length	Extension	Weight	Item No.	Item No.
	full extension	per set	black	pure white
mm	mm	kg		
450	340	*	*	*
500	375	*	*	*
600	450	*	*	*
700	525	*	*	*
800	600	*	*	*
900	675	*	*	*
995	750	5.73	▸ **80134**	*
1,050	790	*	*	*
1,100	825	*	*	*

Packing Unit – Sets per Box, all Lengths: 4

▸ in stock | * on request

FR 775A ECD | Full Extension Progressive Action Vertical Pantry Pull-Out Slide System with Top Guide – up to 75 kg

ECD

Specifications

- floor mount
- min. 88.5 mm
- dynamic up to 75 kg
- solid synthetic rollers
- steel, powder coated

Characteristics

- quick and easy installation through patented slide-on system
- integrated lateral and height adjustment
- recommended maximal cabinet height: 1.500 mm
- recommended maximum cabinet width: 400 mm

Dimensions

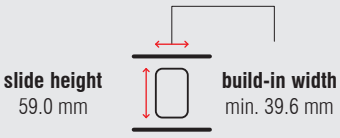

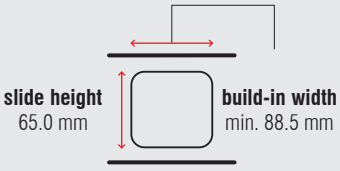

Length	Extension	Weight	Item No.
		per set	pure white
mm	mm	kg	
400	385	5.67	▸ **4221**
450	435	6.19	▸ **4222**
500	485	6.89	▸ **4223**
550	535	7.41	▸ **4224**
600	585	8.12	▸ **4225**
650	635	8.64	▸ **4226**
700	685	9.16	▸ **4227**
750	735	9.68	▸ **4228**

Packing Unit – Sets per Box, all Lengths: 1

▸ in stock

FR 771A | Full Extension Progressive Action Vertical Pantry Pull-Out Slide System with Top Guide – up to 120 kg

ECD

Specifications

- floor mount
- min. 108 mm
  min. 135 mm (ECD)
- dynamic up to 120 kg
- solid synthetic rollers,
  synthetic encased steel ball bearings
- steel, powder coated

Characteristics

- deflection in extended and loaded position maximum 5 mm
- quick and easy installation through patented slide-on system
- integrated lateral and height adjustment
- Easy Close Device FR 771A ECD can be ordered optionally; Item No. 7749
- LGA-tested according to DIN 4554 at 50,000 cycles
- recommended maximal cabinet height: 2,000 mm
- recommended maximum cabinet width: 500 mm

Dimensions

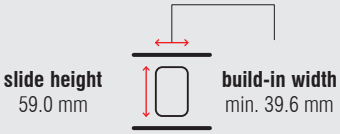

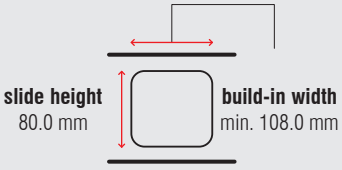

Length	Extension	Weight	Item No.
		per set	pure white
mm	mm	kg	
400	384	6.85	▸ **7741**
430	414	*	*
450	434	7.52	▸ **7742**
480	464	*	*
500	484	8.38	▸ **7743**
550	534	9.05	▸ **7744**
600	584	9.77	▸ **7745**
650	634	10.44	▸ **7746**
700	684	11.11	▸ **7747**
750	734	11.79	▸ **7748**

Packing Unit – Sets per Box, all Lengths: 1

▸ in stock | * on request

FR 777A | Full Extension Progressive Action Vertical Pantry Pull-Out Slide System with Top Guide – up to 200 kg

ECD

Specifications

- floor mount
- min. 124 mm
  min. 158 mm (ECD)
- dynamic up to 200 kg
- solid synthetic rollers,
  synthetic encased steel ball bearings
- steel, powder coated

Characteristics

- no deflection in fully extended position
- quick and easy installation through patented slide-on system
- integrated lateral and height adjustment
- Easy Close Device FR 777A ECD can be ordered optionally; Item No. 7719
- recommended maximal cabinet height: 2,500 mm
- recommended maximum cabinet width: 600 mm

Dimensions

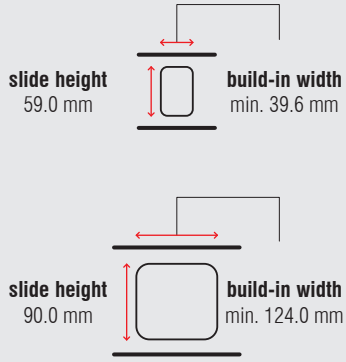

Length	Extension	Weight	Item No.
		per set	pure white
mm	mm	kg	
400	384	10.39	▸ **7700**
450	434	11.53	▸ **7701**
500	484	12.69	▸ **7702**
550	534	13.81	▸ **7703**
600	584	14.83	▸ **7704**
650	634	15.81	▸ **7705**
700	684	17.07	▸ **7706**
750	734	18.09	▸ **7707**
800	784	19.22	▸ **7708**
850	834	20.03	▸ **7709**
900	884	21.37	▸ **7710**
950	934	22.39	▸ **7711**
1,000	984	23.41	▸ **7712**
1,100	1,084	24.86	▸ **7713**

Packing Unit – Sets per Box, all Lengths: 1

▸ in stock

FR 771A ECD | Easy Close Device Retrofit-Kit for Vertical Pantry Pull-Out Slide System FR 771A

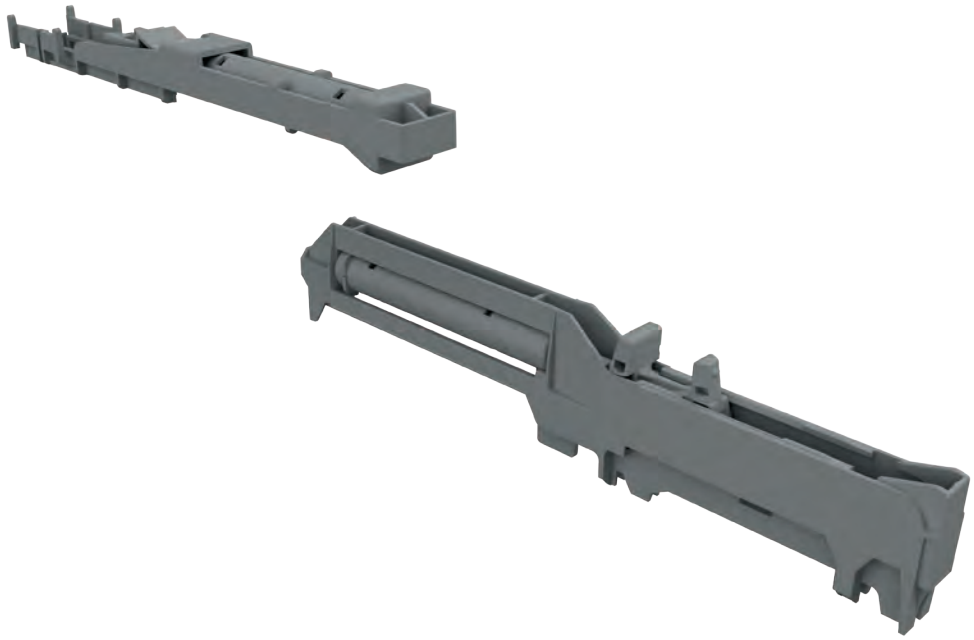

Specifications

synthetic material, steel

+5 °C to +40 °C

Characteristics

- Simple assembly due to plug-in system – the vertical pantry pull-out slide system FR 771A is already prepared for the installation of the Easy Close Device retrofit-kit.
- reliable, silent self closing device
- The easy close / self-closing and slam-resistant function is not compromised by varying load conditions.

Delivery Set

top slide:
- 1 x attachable damping system

bottom slide:
- 1 x attachable damping system
- assembly instruction

Designation	Item No.
FR 771A ECD – Retrofit-kit for vertical pantry pull-out slide system FR 771A	**7749**

Packing Unit – Set per Polybag: 1

in stock

FR 777A ECD | Easy Close Device Retrofit-Kit for Vertical Pantry Pull-Out Slide System FR 777A

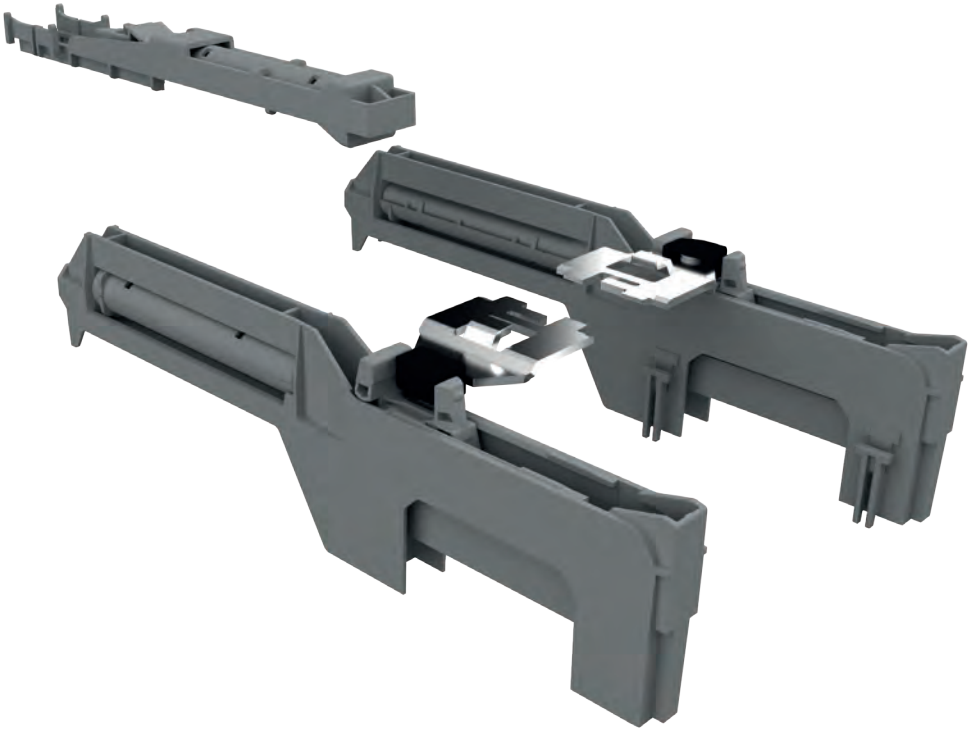

Specifications

synthetic material, steel

+5 °C to +40 °C

Characteristics

- Simple assembly due to plug-in system – the vertical pantry pull-out slide system FR 777A is already prepared for the installation of the Easy Close Device retrofit-kit.
- reliable, silent self closing device
- The easy close / self-closing and slam-resistant function is not compromised by varying load conditions.

Delivery Set

top slide:
- 1 x attachable damping system

bottom slide:
- 2 x attachable damping system
- 2 x follower, snap-on
- assembly instruction

Designation	Item No.
FR 777A ECD – Retrofit-kit for vertical pantry pull-out slide system FR 777A	**7719**

Packing Unit – Set per Polybag: 1

in stock

FULTERER **stainless steel roller bearing drawer slide systems** are used in many areas of daily lifes, from **catering, refrigeration and professional kitchen equipment, clima-controlled medical cabinets** and **utility vehicle applications.** Its characteristics stand for corrosion-resistance, durability and robustness. Stainless steel in quality 1.4509, with rounded edges is utilized. Roller bearings are fabricated in stainless steel, quality 1.4034.

All stainless steel drawer slide systems are **NSF-tested** and meet the highest public health and safety standards. The NSF (National Sanitation Foundation) is an internationally recognized institution for the development and compliance with hygiene standards in the food-processing industry. The NSF-quality certificate is issued following inspection and the appropriate fullfilment of all NSF requirements.

FULTERER products feature **optional Easy Close Device (ECD) systems** for silent and linear self-closing, some of which can be retrofitted.

34 | 49

STAINLESS STEEL ROLLER BEARING DRAWER SLIDE SYSTEMS

- REGULAR EXTENSION
- FULL EXTENSION
- ACCESSORIES

FR 1051 SCC | Regular Extension Drawer Slide with Lateral Stability

Specifications

- side mount
- 15 mm
- dynamic up to 50 kg
- synthetic silent rollers
- stainless steel 1.4509 / 441
- -25 °C to +80 °C

Characteristics

- single-sided captive profile (right)
- rear backstop
- self-closing
- compatible with full extension drawer slide FR 6010 SCC
- available as heat-resistant version up to +210 °C

Dimensions

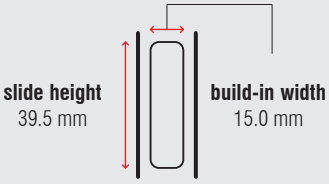

Length	Extension	Weight	Item No.
		per set	
mm	mm	kg	
400	294	0.95	▸ **1102**
450	344	1.05	▸ **1103**
500	394	1.20	▸ **1104**
550	424	1.34	▸ **1105**
600	474	1.43	▸ **1106**
650	524	1.56	▸ **1107**
700	574	*	▸ **1108**
750	624	*	▸ **1109**

Packing Unit – Sets per Box, all Lengths: 10

▸ in stock | * on request

FR 1052 SCC | Regular Extension Drawer Slide with Lateral Stability

Specifications

- side mount
- 18 mm
- dynamic up to 50 kg
- synthetic silent rollers
- stainless steel 1.4509 / 441
- -25 °C to +80 °C

Characteristics

- single-sided captive profile (right)
- rear backstop
- self-closing
- compatible with full extension drawer slide FR 790 SCC and FR 785 SCC

Dimensions

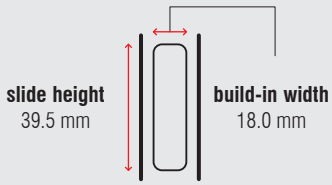

Length	Extension	Weight	Item No.
		per set	
mm	mm	kg	
400	294	0.95	▸ **1601**
450	344	1.07	▸ **1602**
500	394	1.18	▸ **1603**
550	424	1.30	▸ **1604**
600	474	1.42	▸ **1605**
650	524	1.52	▸ **1606**
700	574	*	*
750	624	*	*

Packing Unit – Sets per Box, all Lengths: 10

▸ in stock | * on request

FR 1052 SCC SC | Regular Extension Drawer Slide with Lateral Stability

Specifications

- side mount
- 18 mm
- dynamic up to 50 kg
- synthetic silent rollers
- stainless steel 1.4509 / 441
- -25 °C to +80 °C

Characteristics

- cabinet profile with bayonet mounting tabs and safety nose
- tool-less quick assembly of the cabinet profile
- single-sided captive profile (right)
- rear backstop
- self-closing
- compatible with full extension drawer slide FR 785 SCC SC

Dimensions

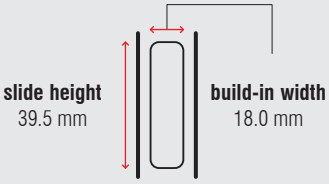

Length	Extension	Weight	Item No.
		per set	
mm	mm	kg	
400	294	0.96	▸ **5302**
450	344	1.05	*
500	394	1.17	▸ **5304**
550	424	1.29	*
600	474	1.40	▸ **5306**
650	524	1.60	*
700	574	*	*
750	624	1.78	*

Packing Unit – Set per Box, all Lengths: 10

▸ in stock | * on request

FR 2051 SCC | Regular Extension Drawer Slide with Lateral Stability

Specifications

- bottom mount
- 15 mm
- dynamic up to 50 kg
- synthetic silent rollers
- stainless steel 1.4509 / 441
- -25 °C to +80 °C

Characteristics

- single-sided captive profile (right)
- rear backstop
- self-closing
- available as heat-resistant version up to +210 °C

Dimensions

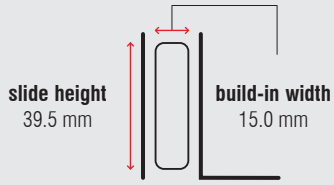

Length	Extension	Weight	Item No.
		per set	
mm	mm	kg	
400	294	1.13	▸ **1510**
450	344	1.20	▸ **1511**
500	394	1.31	▸ **1512**
550	424	1.48	▸ **1513**
600	474	1.61	▸ **1514**
650	524	1.79	▸ **1515**
700	574	1.87	▸ **1516**
750	624	2.01	▸ **1517**

Packing Unit – Sets per Box, all Lengths: 10

▸ in stock

FR 505 SCC | Regular Extension Drawer Slide

Specifications

- bottom mount
- 15 mm
- dynamic up to 100 kg
- stainless steel ball bearings with integrated synthetic gliding ring
- stainless steel 1.4509 / 441
- -25 °C to +80 °C

Characteristics

- rear backstop
- self-closing
- available as heat-resistant version up to +210 °C

Dimensions

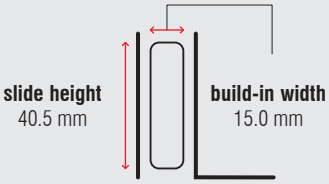

Length	Extension	Weight	Item No.
		per set	
mm	mm	kg	
400	294	1.94	▸ **1060**
450	344	2.17	▸ **1061**
500	394	2.41	▸ **1062**
550	444	2.64	▸ **1063**
600	494	2.89	▸ **1064**
650	544	3.13	▸ **1065**
700	584	3.36	▸ **1066**
750	634	3.59	▸ **1067**

Packing Unit – Sets per Box, all Lengths: 5

▸ in stock

FR 6010 SCC | Over Extension Telescopic Action Drawer Slide with Lateral Stability

Specifications

- side mount
- 15 mm
- dynamic up to 50 kg
- solid synthetic rollers, stainless steel ball bearings
- stainless steel 1.4509 / 441
- -25 °C to +80 °C

Characteristics

- high lateral stability
- middle profile with locking device for easy assembly
- dual-sided captive profile
- synthetic stop
- self-closing
- compatible with regular extension drawer slides FR 1051 SCC
- available as heat-resistant version up to +210 °C

Dimensions

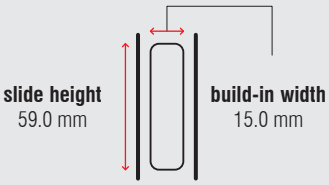

Length	Extension	Weight	Item No.	Item No.
		per set	solid synthetic rollers	heat-resistant
mm	mm	kg		
300	320	1.41	▸ **90212**	*
350	395	1.63	▸ **90213**	▸ **2521**
400	445	1.79	▸ **90214**	▸ **2522**
450	495	2.05	▸ **90215**	*
500	545	2.28	▸ **90216**	▸ **2524**
550	595	2.50	▸ **90217**	▸ **2525**
600	645	2.71	▸ **90218**	▸ **2526**
650	695	2.94	▸ **90219**	*
700	745	3.22	▸ **90220**	*
750	795	3.43	▸ **90221**	*

Packing Unit – Sets per Box, all Lengths: 6

▸ in stock | * on request

FR 785 SCC | Full Extension Progressive Action Drawer Slide

Specifications

- side mount
- 18 mm
- dynamic up to 60 kg (full extension) dynamic up to 48 kg (over extension)
- solid synthetic rollers
- stainless steel 1.4509 / 441
- -25 °C to +80 °C

Characteristics

- high lateral stability
- cabinet and drawer profile with screw holes
- ideal running characteristic and smoothness of running through integrated progressive action
- integrated safety clip
- dual-sided captive profile
- synthetic stop
- self-closing
- compatible with regular extension drawer slides FR 1052 SCC
- Easy Close Device (ECD) can be ordered optionally; see page 48

Dimensions

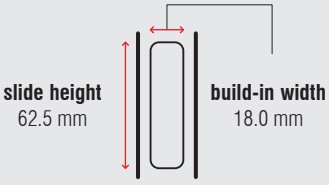

Length	Extension	Extension	Weight	Item No.	Item No.
	full extension	over extension	per set	full extension	over extension
mm	mm	mm	kg		
335	320	395	*	*	*
350	335	410	1.47	▸ **8522**	*
385	370	445	*	*	*
400	385	460	1.68	▸ **8524**	*
435	420	495	*	*	*
450	435	510	1.91	▸ **8526**	*
485	470	545	*	*	*
500	485	560	2.14	▸ **8528**	*
535	520	595	*	*	*
550	535	610	2.52	▸ **8530**	*
585	570	645	*	*	*
600	585	660	2.60	▸ **8532**	*
635	620	695	*	*	*
650	635	710	2.83	▸ **8534**	*
685	670	745	*	*	*
700	685	760	3.05	▸ **8536**	*
735	720	795	*	*	*
750	735	810	*	*	*

Packing Unit – Sets per Box, all Lengths: 5

▸ in stock | * on request

FR 785 SCC SC | Full Extension Progressive Action Drawer Slide

Specifications

- side mount
- 18 mm
- dynamic up to 60 kg (full extension) dynamic up to 48 kg (over extension)
- solid synthetic rollers
- stainless steel 1.4509 / 441
- -25 °C to +80 °C

Characteristics

- high lateral stability
- cabinet profile with bayonet mounting tabs and safety nose
- drawer profile without screw holes
- tool-less quick assembly of the cabinet profile
- ideal running characteristic and smoothness of running through integrated progressive action
- integrated safety clip
- dual-sided captive profile
- synthetic stop
- self-closing
- compatible with regular extension drawer slides FR 1052 SCC SC
- Easy Close Device (ECD) can be ordered optionally; see page 48

Dimensions

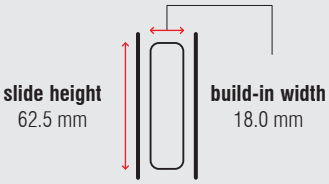

Length	Extension	Extension	Weight	Item No.	Item No.
	full extension	over extension	per set	full extension	over extension
mm	mm	mm	kg		
335	320	395	*	*	*
350	335	410	1.50	▸ **8322**	*
385	370	445	*	*	*
400	385	460	1.71	▸ **8324**	*
435	420	495	*	*	*
450	435	510	1.92	▸ **8326**	*
485	470	545	*	*	*
500	485	560	2.13	▸ **8328**	*
535	520	595	*	*	*
550	535	610	2.36	▸ **8330**	*
585	570	645	*	*	*
600	585	660	2.60	▸ **8332**	*
635	620	695	*	*	*
650	635	710	2.86	▸ **8334**	*
685	670	745	*	*	*
700	685	760	*	*	*
735	720	795	*	*	*
750	735	810	*	*	*

Packing Unit – Sets per Box, all Lengths: 5

▸ in stock | * on request

FR 786 SCC ECD | Full Extension Progressive Action Drawer Slide

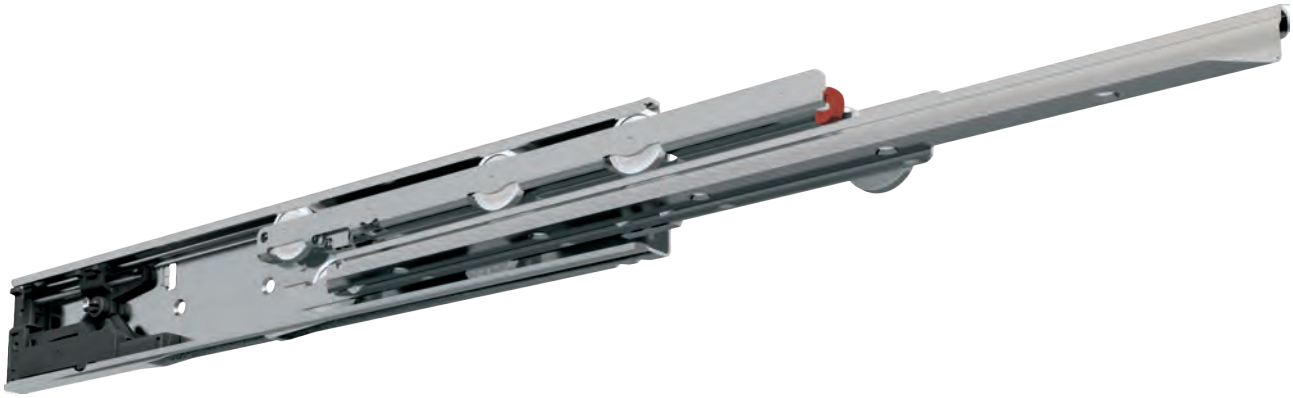

Specifications

- bottom mount
- 18 mm
- dynamic up to 60 kg (full extension) dynamic up to 48 kg (over extension)
- solid synthetic rollers
- stainless steel 1.4509 / 441
- +5 °C to +40 °C

Characteristics

- high lateral stability
- cabinet and drawer profile with screw holes
- ideal running characteristic and smoothness of running through integrated progressive action
- integrated safety clip
- dual-sided captive profile
- Easy Close Device (ECD) pre-assembled

Dimensions

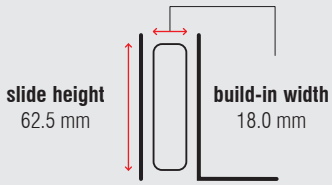

Length	Extension	Extension	Weight	Item No.	Item No.
	full extension	over extension	per set	full extension	over extension
mm	mm	mm	kg		
335	320	395	*	*	*
350	335	410	1.60	▸ **8222**	*
385	370	445	*	*	*
400	385	460	1.86	▸ **8224**	*
435	420	495	*	*	*
450	435	510	1.91	▸ **8226**	*
485	470	545	*	*	*
500	485	560	2.33	▸ **8228**	*
535	520	595	*	*	*
550	535	610	2.58	▸ **8230**	*
585	570	645	*	*	*
600	585	660	2.80	▸ **8232**	*
635	620	695	*	*	*
650	635	710	3.03	▸ **8234**	*
685	670	745	*	*	*
700	685	760	3.28	▸ **8236**	*
735	720	795	*	*	*
750	735	810	*	*	*

Packing Unit – Sets per Box, all Lengths: 5

▸ in stock | * on request

FR 790 SCC | Full Extension Progressive Action Drawer Slide

Specifications

- side mount
- 18 mm
- dynamic up to 68 kg (full extension) dynamic up to 53 kg (over extension)
- solid synthetic rollers
- stainless steel 1.4509 / 441
- -25 °C to +80 °C

Characteristics

- high lateral stability
- cabinet and drawer profile with screw holes
- ideal running characteristic and smoothness of running through integrated progressive action
- integrated safety clip
- dual-sided captive profile
- synthetic stop
- self-closing
- compatible with regular extension drawer slide FR 1052 SCC
- available as heat-resistant version up to +110 °C – load capacity 40 kg for over extension (drawer profile without screw holes)

Dimensions

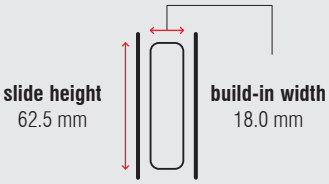

Length	Extension	Extension	Weight	Item No.	Item No.	Item No.
	full extension	over extension	per set	full extension	over extension	over extension heat-resistant
mm	mm	mm	kg			
350	335	410	1.62	▸ **7900**	*	▸ **7970**
400	385	460	1.81	▸ **7901**	*	*
450	435	510	2.04	▸ **7902**	*	▸ **7972**
500	485	560	2.28	▸ **7903**	*	▸ **7973**
550	535	610	2.49	▸ **7904**	▸ **7924**	▸ **7974**
600	585	660	2.73	▸ **7905**	*	▸ **7975**
650	635	710	2.98	▸ **7906**	▸ **7926**	*
700	685	760	3.18	▸ **7907**	*	*
750	735	810	*	*	*	*

Packing Unit – Sets per Box, all Lengths: 5

▸ in stock | * on request

FR 790 SCC SC | Full Extension Progressive Action Drawer Slide

Specifications

- side mount
- 18 mm
- dynamic up to 68 kg (full extension) dynamic up to 53 kg (over extension)
- solid synthetic rollers
- stainless steel 1.4509 / 441
- -25 °C to +80 °C

Characteristics

- high lateral stability
- cabinet profile with bayonet mounting tabs and safety nose
- drawer profile without screw holes
- tool-less quick assembly of the cabinet profile
- ideal running characteristic and smoothness of running through integrated progressive action
- integrated safety clip
- dual-sided captive profile
- synthetic stop
- self-closing
- compatible with regular extension drawer slides FR 1052 SCC SC

Dimensions

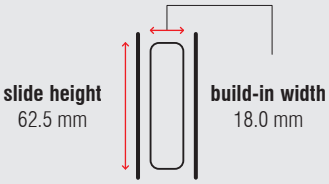

Length	Extension	Extension	Weight	Item No.	Item No.
	full extension	over extension	per set	full extension	over extension
mm	mm	mm	kg		
350	335	410	1.60	*	▸ **8020**
400	385	460	1.81	*	▸ **8021**
450	435	510	2.04	*	▸ **8022**
500	485	560	2.27	*	▸ **8023**
550	535	610	2.50	*	▸ **8024**
600	585	660	2.77	*	▸ **8025**
650	635	710	2.98	*	▸ **8026**
700	685	760	3.21	*	▸ **8027**
750	735	810	*	*	*

Packing Unit – Sets per Box, all Lengths: 5

▸ in stock | * on request

FR 791 SCC | Full Extension Progressive Action Drawer Slide

Specifications

- bottom mount
- 18 mm
- dynamic up to 68 kg (full extension) dynamic up to 53 kg (over extension)
- solid synthetic rollers
- stainless steel 1.4509 / 441
- -25 °C to +80 °C

Characteristics

- high lateral stability
- cabinet and drawer profile with screw holes
- ideal running characteristic and smoothness of running through integrated progressive action
- integrated safety clip
- dual-sided captive profile
- synthetic stop
- self-closing

Dimensions

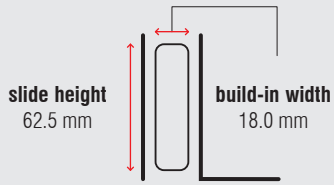

Length	Extension	Extension	Weight	Item No.	Item No.
	full extension	over extension	per set	full extension	over extension
mm	mm	mm	kg		
350	335	410	*	*	*
400	385	460	1.95	▸ **7941**	*
450	435	510	2.21	▸ **7942**	*
500	485	560	2.46	▸ **7943**	*
550	535	610	2.72	▸ **7944**	▸ **81413**
600	585	660	2.94	▸ **7945**	*
650	635	710	3.17	▸ **7946**	*
700	685	760	3.41	▸ **7947**	*
750	735	810	*	*	*

Packing Unit – Sets per Box, all Lengths: 5

▸ in stock | * on request

FR 7100 SCC | Full Extension Progressive Action Drawer Slide

Specifications

- bottom mount
- 24 mm
- dynamic up to 120 kg (full extension)
  dynamic up to 105 kg (over extension)
  dynamic up to 90 kg (heat-resistant)
- solid synthetic rollers
- stainless steel 1.4509 / 441
- -25 °C to +80 °C

Characteristics

- high lateral stability
- cabinet profile with screw holes and drawer profile without holes
- ideal running characteristic and smoothness of running through integrated progressive action
- integrated safety clip
- dual-sided captive profile
- self-closing
- available as heat-resistant version up to +110 °C – load capacity for full extension 90 kg

Dimensions

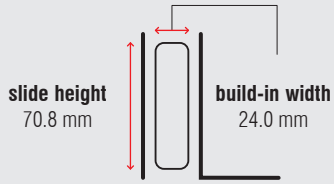

Length	Extension	Extension	Weight	Item No.	Item No.	Item No.
	full extension	over extension	per set	full extension	full extension heat-resistant	over extension
mm	mm	mm	kg			
400	385	460	3.51	▸ **7130**	▸ **7140**	*
450	435	510	4.00	▸ **7131**	*	*
500	485	560	4.44	▸ **7132**	▸ **7142**	*
550	535	610	4.86	▸ **7133**	▸ **7143**	*
600	585	660	5.28	▸ **7134**	▸ **7144**	*
650	635	710	5.77	▸ **7135**	▸ **7145**	*
700	685	760	6.37	▸ **7136**	*	*
750	735	810	7.00	▸ **7137**	*	*

Packing Unit – Sets per Box: from 400 to 600 mm: **4** | from 650 to 750 mm: **2**

▸ in stock | * on request

FR 7101 SCC | Full Extension Progressive Action Drawer Slide

Specifications

- side mount
- 24 mm
- dynamic up to 120 kg (full extension) dynamic up to 105 kg (over extension)
- solid synthetic rollers
- stainless steel 1.4509 / 441
- -25 °C to +80 °C

Characteristics

- high lateral stability
- cabinet profile with screw holes and drawer profile without holes
- ideal running characteristic and smoothness of running through integrated progressive action
- integrated safety clip
- dual-sided captive profile
- self-closing
- available as heat-resistant version up to +110 °C – load capacity for full extension 90 kg, 80 kg for over extension

Dimensions

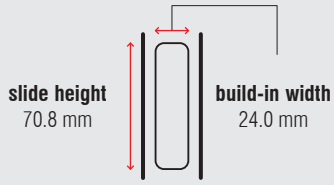

Length	Extension	Extension	Weight	Item No.	Item No.
	full extension	over extension	per set	full extension	over extension
mm	mm	mm	kg		
400	385	460	3.50	▸ **7110**	*
450	435	510	3.98	▸ **7111**	*
500	485	560	4.42	▸ **7112**	▸ **7122**
550	535	610	4.84	▸ **7113**	▸ **7123**
600	585	660	5.30	▸ **7114**	▸ **7124**
650	635	710	5.76	▸ **7115**	*
700	685	760	6.20	▸ **7116**	*
750	735	810	6.63	▸ **7117**	*

Packing Unit – Sets per Box: from 400 to 600 mm: **4** | from 650 to 750 mm: **2**

▸ in stock | * on request

Easy Close Device

Retrofit-Kit
for FR 785 SCC / FR 785 SCC SC / FR 786 SCC

ECD 78-S

Standard Applications
+5 °C to +40 °C

ECD 78-C

Cooling Applications
-10 °C to +10 °C

ECD 78-F

Freezing Applications
-25 °C to -5 °C

Designation	Weight	Item No.
	kg	
ECD 78-S	0.09	▸ **83962**
ECD 78-C	0.10	▸ **83442**
ECD 78-F	0.10	▸ **83443**

Packing Unit – Set per Polybag: 1

▸ in stock

FR 712 CNS | Locking System

Specifications

stainless steel 1.4301 / 304

Characteristics

- positive locking device with compression spring
- retention function via compression spring
- mounting via 2 threaded bolts
- supplied without catch pin

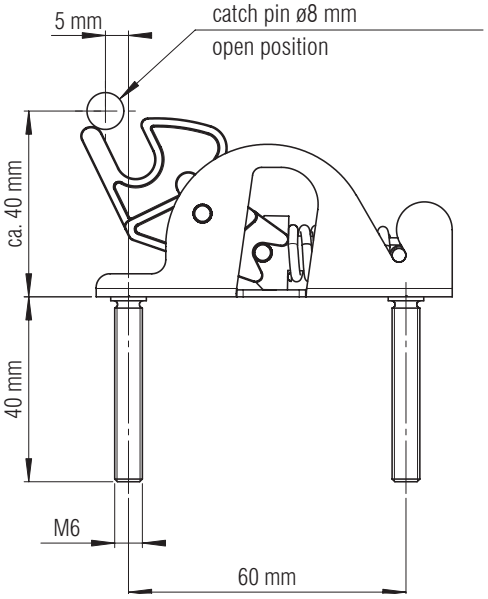

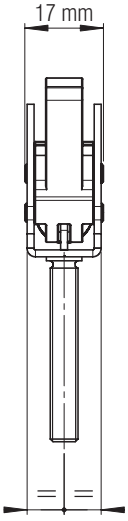

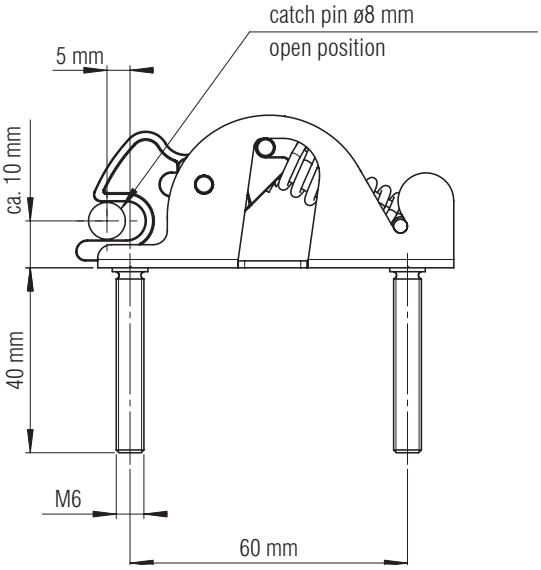

Designation	Item No.
Locking System	**6100067**

Packing Unit – Piece: 1

in stock

Ball bearing drawer slides enable the drawer to be pulled out completely, in the version of **over extension,** even up to the front edge of the cabinet.

Product features:
- high dynamic load capacity from 25 to 500 kg
- nominal lengths from 150 to 1,500 mm
- galvanized steel, stainless steel or aluminium versions

For individual customer requirements customized specific designs with adapted fastening variants are available for almost unlimited type of applications.

52 | 68

BALL BEARING DRAWER SLIDES

- REGULAR EXTENSION
- FULL EXTENSION
- ACCESSORIES

FR 5000 | Full Extension Ball Bearing Slide

Specifications

- side mount
- 13 mm
- dynamic up to 45 kg
- ball bearing cages
- steel, zinc plated

Characteristics

- pitch 32 compatible hole locations
- drawer profile with disconnect release trigger
- tolerance absorbing mounting tabs

Dimensions

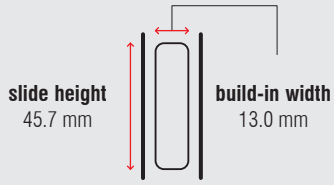

Length	Extension	Weight	Item No.
		per set	zinc plated
mm	mm	kg	
250	250	0.73	▸ **5050**
300	302	0.89	▸ **5051**
350	354	1.07	▸ **5052**
400	400	1.17	▸ **5053**
450	452	1.35	▸ **5054**
500	515	1.53	▸ **5055**
550	558	1.68	▸ **5056**
600	600	1.83	▸ **5057**
650	650	1.98	▸ **5058**
700	705	2.14	▸ **5059**

Packing Unit – Sets per Box, all Lengths: 10

▸ in stock

FR 5001 ECD | Full Extension Ball Bearing Slide

ECD

Specifications

- side mount
- 12.8 mm
- dynamic up to 45 kg
- ball bearing cages
- steel, zinc plated
- +5 °C to +40 °C

Characteristics

- pitch 32 compatible hole locations
- drawer profile with disconnect release trigger
- tolerance absorbing mounting tabs

Dimensions

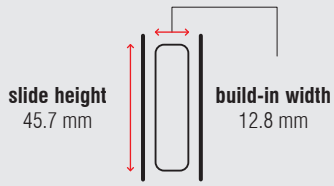

Length	Extension	Weight	Item No.
		per set	zinc plated
mm	mm	kg	
300	245	0.90	▸ **5061**
355	350	1.05	▸ **5062**
405	400	1.20	▸ **5063**
450	450	1.36	▸ **5064**
500	500	1.51	▸ **5065**
550	550	1.61	▸ **5066**
600	600	1.81	▸ **5067**
650	650	1.97	▸ **5068**
700	700	2.13	▸ **5069**

Packing Unit – Sets per Box, all Lengths: 10

▸ in stock

FR 5002 CNS | Full Extension Ball Bearing Slide

Specifications

- side mount
- 13.1 mm
- dynamic up to 45 kg
- stainless steel ball bearing cages
- stainless steel 1.4301 / 304

Characteristics

- pitch 32 compatible hole locations
- drawer profile with disconnect release trigger
- tolerance absorbing mounting tabs

Dimensions

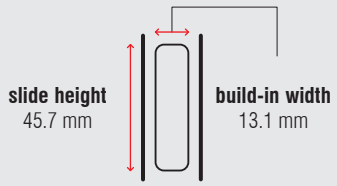

Length	Extension	Weight	Item No.
		per set	stainless steel
mm	mm	kg	
250	250	*	*
300	300	*	*
350	350	*	*
400	400	1.18	▸ **5113**
450	450	1.32	▸ **5114**
500	500	1.50	▸ **5115**
550	550	1.65	▸ **5116**
600	600	1.80	▸ **5117**
650	650	*	*
700	700	*	*
750	750	*	*

Packing Unit – Sets per Box, all Lengths: 10

▸ in stock | * on request

FR 5036 | Full Extension Ball Bearing Slide

Specifications

- side mount
- 13 mm
- dynamic up to 30 kg
- ball bearing cages
- steel, zinc plated

Characteristics

- pitch 32 compatible hole locations
- drawer profile with disconnect release trigger
- tolerance absorbing mounting tabs
- self-closing mechanism

Dimensions

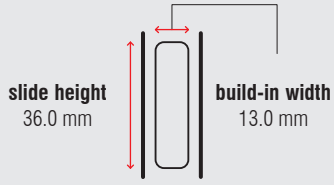

Length	Extension	Weight	Item No.
		per set	zinc plated
mm	mm	kg	
250	254	0.58	▸ **5080**
300	305	0.69	▸ **5081**
350	356	0.82	▸ **5082**
400	406	0.92	▸ **5083**
450	457	1.06	▸ **5084**
500	508	1.15	▸ **5085**
550	559	1.27	▸ **5086**
600	610	1.39	▸ **5087**

Packing Unit – Sets per Box, all Lengths: 20

▸ in stock

FR 5052 | Full Extension Ball Bearing Slide

Specifications

- side mount
- 13 mm
- dynamic up to 90 kg
- ball bearing cages
- steel, zinc plated

Characteristics

- pitch 32 compatible hole locations
- drawer profile with disconnect release trigger
- tolerance absorbing mounting tabs

Dimensions

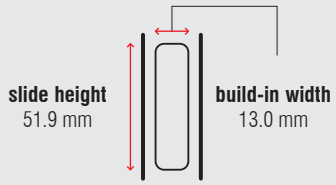

Length	Extension	Weight	Item No.
		per set	zinc plated
mm	mm	kg	
300	300	1.37	*
350	350	1.59	▸ **5152**
400	400	1.83	▸ **5153**
450	450	2.05	▸ **5154**
500	500	2.33	▸ **5155**
550	550	2.69	▸ **5156**
600	600	2.80	▸ **5157**
650	650	3.05	▸ **5158**
700	700	3.30	▸ **5159**

Packing Unit – Sets per Box: from 300 to 450 mm: **10** | from 500 to 550 mm: **8** | from 600 to 700 mm: **6**

▸ in stock | * on request

FR 5400 | Full Extension Ball Bearing Slide

Specifications

- side mount
- 19.5 mm
- dynamic up to 250 kg
- stainless steel ball bearing cages
- steel, zinc plated

Characteristics

- symmetrical design – can therefore be used on both sides
- slides are non-detachable

Dimensions

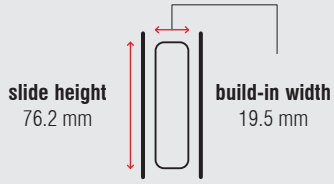

Length	Extension	Weight	Item No.
		per set	zinc plated
mm	mm	kg	
203.2	203.2	1.95	*
254.0	254.0	2.45	*
304.8	304.8	2.98	*
355.6	355.6	3.48	▸ **5503**
406.4	406.4	4.00	▸ **5504**
457.2	457.2	4.70	▸ **5505**
508.0	508.0	5.20	▸ **5506**
558.8	558.8	5.55	▸ **5507**
609.6	609.6	6.05	▸ **5508**
660.4	660.4	6.60	▸ **5509**
711.2	711.2	7.10	▸ **5510**
762.0	762.0	7.55	▸ **5511**
812.8	812.8	8.10	▸ **5512**
863.3	863.3	8.60	▸ **5513**
914.4	914.4	9.10	▸ **5514**
965.2	965.2	9.60	▸ **5515**
1,016.0	1,016.0	10.30	▸ **5516**
1,066.8	1,066.8	11.00	▸ **5517**
1,117.6	1,117.6	11.40	▸ **5518**
1,168.4	1,168.4	11.80	▸ **5519**
1,219.2	1,219.2	12.30	▸ **5520**
1,270.0	1,270.0	12.70	▸ **5521**
1,320.0	1,320.0	13.20	▸ **5522**
1,371.6	1,371.6	13.60	▸ **5523**
1,422.4	1,422.4	14.10	▸ **5524**
1,473.2	1,473.2	14.60	▸ **5525**
1,524.0	1,524.0	15.40	▸ **5526**

Packing Unit – Sets per Box: from 203.2 to 609.6 mm: **4** | from 660.4 to 863.3 mm: **2** | from 914.4 to 1,524.0 mm: **1**

▸ in stock | * on request

FR 5400L | Full Extension Ball Bearing Slide with Locking Mechanism

Specifications

- side mount
- 19.5 mm
- dynamic up to 250 kg
- stainless steel ball bearing cages
- steel, zinc plated

Characteristics

- lock-in and lock-out mechanism
- not symmetrical – function of the locking lever
- slides are non-detachable

Dimensions

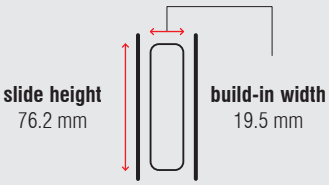

Length	Extension	Weight	Item No.
		per set	zinc plated
mm	mm	kg	
355.6	355.6	3.75	▸ **5603**
406.4	406.4	4.27	▸ **5604**
457.2	457.2	4.82	▸ **5605**
508.0	508.0	5.35	▸ **5606**
558.8	558.8	5.85	▸ **5607**
609.6	609.6	6.32	▸ **5608**
660.4	660.4	7.00	▸ **5609**
711.2	711.2	7.45	▸ **5610**
762.0	762.0	7.95	▸ **5611**
812.8	812.8	8.50	▸ **5612**
863.6	863.6	9.00	▸ **5613**
914.4	914.4	9.50	▸ **5614**
965.2	965.2	10.00	▸ **5615**
1,016.0	1,016.0	10.70	▸ **5616**
1,066.8	1,066.8	11.40	▸ **5617**
1,117.6	1,117.6	11.80	▸ **5618**
1,168.4	1,168.4	12.30	▸ **5619**
1,219.2	1,219.2	12.70	▸ **5620**
1,270.0	1,270.0	13.10	▸ **5621**
1,320.8	1,320.8	13.80	▸ **5622**
1,371.6	1,371.6	14.10	▸ **5623**
1,422.4	1,422.4	14.50	▸ **5624**
1,473.2	1,473.2	15.00	▸ **5625**
1,524.0	1,524.0	15.80	▸ **5626**

Packing Unit – Sets per Box: from 355.6 to 609.6 mm: **4** | from 660.4 to 863.6 mm: **2** | from 914.4 to 1,524.0 mm: **1**

▸ in stock

FR 5426 | Over Extension Ball Bearing Slide

Specifications

- side mount
- 26 mm
- dynamic up to 350 kg
- stainless steel ball bearing cages
- steel, zinc plated

Characteristics

- symmetrical design
- slides are non-detachable
- flat mounting possible – load capacity reduced
- over extension of 25 mm

Dimensions

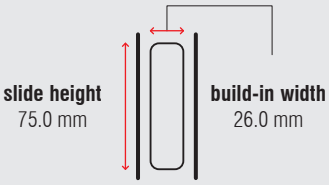

Length	Extension	Weight	Item No.
		per set	zinc plated
mm	mm	kg	
300	325	5.35	*
350	375	6.20	*
400	425	7.10	*
450	475	7.55	*
500	525	8.45	*
550	575	9.35	*
600	625	10.80	*
650	675	11.10	*
700	725	12.00	*
750	765	12.90	*
800	825	13.80	*
850	875	14.70	*
900	925	15.60	*
950	975	16.50	*
1,000	1,025	17.40	*

Packing Unit – Sets per Box: from 300 to 550 mm: **2** | from 600 to 1,000 mm: **1**

* on request

FR 5432 | Over Extension Ball Bearing Slide

Specifications

- side mount
- 32 mm
- dynamic up to 220 kg
- stainless steel ball bearing cages
- steel, zinc plated

Characteristics

- 50 % over extension
- symmetrical design
- slides are non-detachable
- flat mounting possible – load capacity reduced

Dimensions

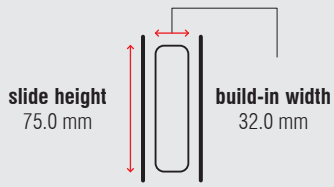

Length	Extension	Weight	Item No.
		per set	zinc plated
mm	mm	kg	
300	465	5.49	*
350	540	6.45	*
400	615	7.45	*
450	690	8.55	*
500	765	9.50	*
550	840	10.50	*
600	915	11.40	*
650	990	12.50	*
700	1,065	13.40	*
750	1,140	14.50	*
800	1,215	15.40	*
850	1,290	16.40	*
900	1,365	17.30	*
950	1,440	18.30	*
1,000	1,515	19.30	*

Packing Unit – Sets per Box: from 300 to 550 mm: **2** | from 600 to 1,000 mm: **1**

* on request

FR 5439 | Full Extension Ball Bearing Slide

Specifications

- side mount
- 39 mm
- dynamic up to 500 kg
- stainless steel ball bearing cages
- steel, zinc plated

Characteristics

- ball bearing slide for highest load capacities
- symmetrical design
- slides are non-detachable
- flat mounting possible – load capacity reduced
- synthetic stops

Dimensions

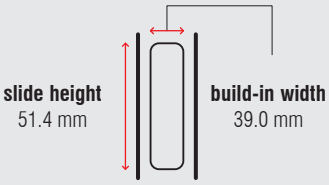

Length	Extension	Weight	Item No.
		per set	zinc plated
mm	mm	kg	
400	400	8.80	*
450	450	10.00	*
500	500	11.20	*
550	550	12.40	*
600	600	13.60	*
650	650	14.80	*
700	700	16.00	*
750	750	17.20	*
800	800	18.40	*
850	850	19.60	*
900	900	20.80	*
950	950	22.00	*
1,000	1,000	23.30	*

Packing Unit – Sets per Box, all Lengths: 1

▸ in stock

FR 5609 | Full Extension Ball Bearing Slide

Specifications

- side mount
- 19.1 mm
- dynamic up to 95 kg
- stainless steel ball bearing cages
- steel, zinc plated

Characteristics

- drawer profile with disconnect release trigger
- symmetrical design
- with hold close detent
- optionally available as FR 5609 OE with 25 mm over extension

Dimensions

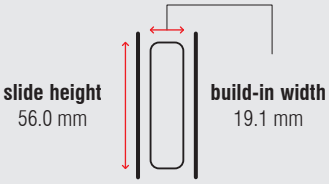

Length	Extension	Weight	Item No.
		per set	zinc plated
mm	mm	kg	
750	750	4.46	*
800	800	4.76	*
850	850	5.06	*
900	900	5.36	*
950	950	5.66	*
1,000	1,000	5.97	*
1,050	1,050	6.26	*
1,100	1,100	6.56	*

Packing Unit – Sets per Box, all Lengths: 4

* on request

FR 5609 OE | Over Extension Ball Bearing Slide

Specifications

- side mount
- 19.1 mm
- dynamic up to 115 kg
- stainless steel ball bearing cages
- steel, zinc plated

Characteristics

- drawer profile with disconnect release trigger
- symmetrical design
- with hold close detent

Dimensions

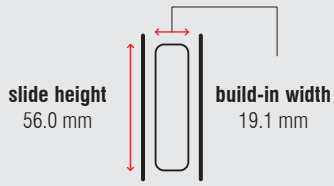

Length	Extension	Weight	Item No.
		per set	zinc plated
mm	mm	kg	
350	375	2.01	*
400	425	2.33	*
450	475	2.64	*
500	525	2.95	*
550	575	3.26	*
600	625	3.58	*
650	675	3.87	*
700	725	4.17	*

Packing Unit – Sets per Box: from 350 to 450 mm: **8** | from 500 to 600 mm: **6** | from 650 to 700 mm: **4**

***** on request

FR 5826 | Full Extension Aluminium Ball Bearing Slide

Specifications

- side mount
- 26 mm
- dynamic up to 300 kg
- stainless steel ball bearing cages
- aluminium

Characteristics

- lightweight ball bearing slide with high weight capacity
- symmetrical design
- slides are non-detachable
- flat mounting possible – load capacity reduced

Dimensions

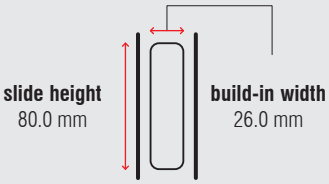

Length	Extension	Weight	Item No.
		per set	aluminium
mm	mm	kg	
300	300	2.41	*
350	350	2.85	*
400	400	3.31	*
450	450	3.76	*
500	500	4.20	*
550	550	4.63	*
600	600	5.04	*
650	650	5.51	*
700	700	5.86	*
750	750	6.25	*
800	800	6.72	*
850	850	7.22	*
900	900	7.65	*
950	950	7.95	*
1,000	1,000	8.50	*

Packing Unit – Sets per Box: from 300 to 750 mm: **3** | from 800 to 1,000 mm: **2**

***** on request

FR 5328 | Two-Way Regular Extension Ball Bearing Slide

Specifications

- side mount
- 13 mm
- dynamic up to 400 kg
- stainless steel ball bearing cages
- steel, zinc plated

Characteristics

- two-way regular extension – allows to be operated to both sides end stop
- symmetrical design
- slides are non-detachable
- flat mounting possible – load capacity reduced

Dimensions

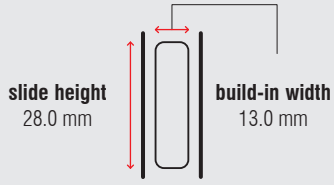

Length	Extension	Weight	Item No.
		per set	zinc plated
mm	mm	kg	
130	74	0.54	*
210	116	0.90	*
290	148	1.26	*
370	190	1.60	*
450	232	1.96	*
530	274	2.32	*
610	316	2.62	*
690	358	2.96	*
770	400	3.30	*
850	433	3.66	*
930	475	4.00	*
1,010	517	4.34	*
1,090	559	4.70	*
1,170	601	5.04	*

Packing Unit – Sets per Box, all Lengths: 5

* on request

FR 5000 ASW | Side Mount Bracket for FR 5000

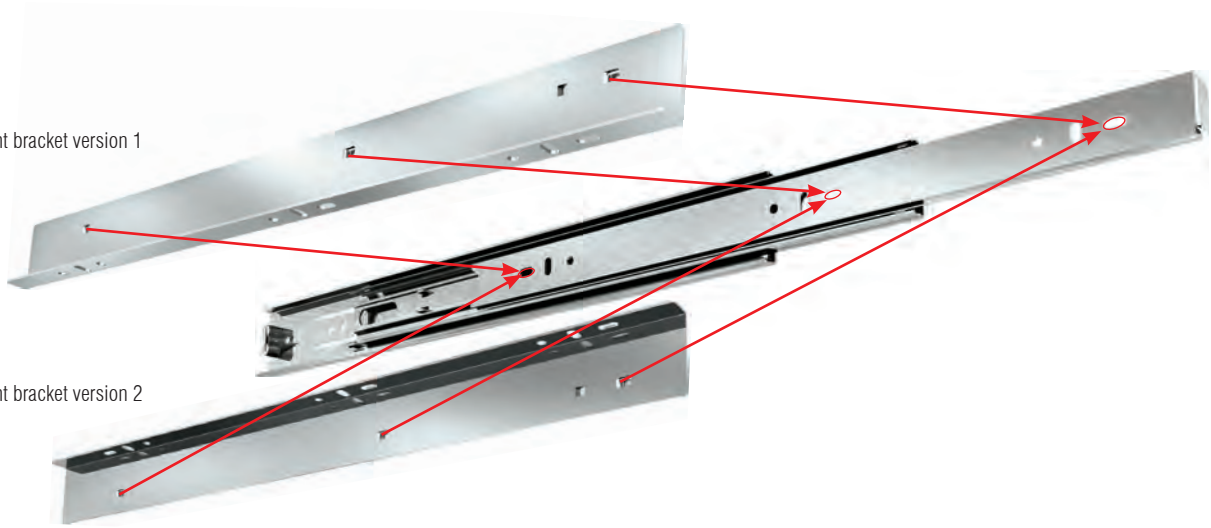

Specifications

- side mount
- 14 mm
- steel, zinc plated

Characteristics

- special side mount bracket for lateral mounting on FR 5000
- for various mounting versions:
  - floor mounting
  - tray mounting
  - bottom mount drawer mounting

Length mount bracket	Length Slide	Weight	Item No.
		per set	zinc plated
mm	mm	kg	
400	400	0.36	▸ **5032**
450	452	0.41	▸ **5033**
500	515	0.46	▸ **5043**
550	558	0.51	▸ **5035**

Packing Unit – Sets per Box, all Lengths: 30

▸ in stock

FR 5400 ASW | Side Mount Brackets for Full Extension Ball Bearing Slides FR 5400 and FR 5400L

Specifications

- side mount
- 250 kg
- steel, zinc plated

Characteristics

- special side mount bracket for lateral mounting on FR 5400 and FR 5400L
- for various mounting versions:
  - floor mounting
  - tray mounting
  - bottom mount drawer mounting

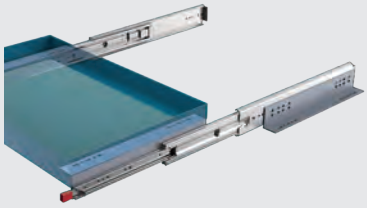

Slide Model	Slide Length	Bracket Length and Item No.			
		305 mm	406 mm	559 mm	711 mm
	mm	*	*	*	*
5400	304.8	2 sets			
5400 / 5400L	355.6	2 sets			
5400 / 5400L	406.4		2 sets		
5400 / 5400L	457.2		2 sets		
5400 / 5400L	508.0		2 sets		
5400 / 5400L	558.8			2 sets	
5400 / 5400L	609.6			2 sets	
5400 / 5400L	660.4			2 sets	
5400 / 5400L	711.2				2 sets
5400 / 5400L	762.0				2 sets
5400 / 5400L	812.8				2 sets
5400 / 5400L	863.6	4 sets			
5400 / 5400L	914.4	4 sets			
5400 / 5400L	965.0	2 sets		2 sets	
5400	1,016.0	2 sets		2 sets	
5400L	1,016.0	3 sets		1 set	
5400	1,066.8	2 sets		1 set	1 set
5400L	1,066.8	3 sets			1 set
5400	1,117.6	2 sets		2 sets	
5400L	1,117.6	2 sets		1 set	1 set
5400	1,168.4	2 sets		2 sets	
5400L	1,168.4	2 sets		1 set	1 set
5400	1,219.2	2 sets			2 sets
5400L	1,219.2	3 sets			1 set
5400 / 5400L	1,270.0	3 sets			1 set
5400 / 5400L	1,320.8	2 sets	1 set		1 set
5400	1,371.6		1 set	3 sets	
5400L	1,371.6	1 set	1 set	2 sets	
5400 / 5400L	1,422.4	1 set		3 sets	
5400 / 5400L	1,473.2			3 sets	1 set
5400	1,524.0		1 set	2 sets	1 set
5400L	1,524.0		1 set	3 sets	

* on request

FR 8100 | Locking Handle with Lock-In and Lock-Out

Specifications

synthetic material, stainless steel

Characteristics

- sold as kit, non-assembled
- for outdoor use and automotive applications
- push button release
- automatic lock-in and lock-out
- 30,000 cycles approved
- supporting drawer width up to 1,622 mm

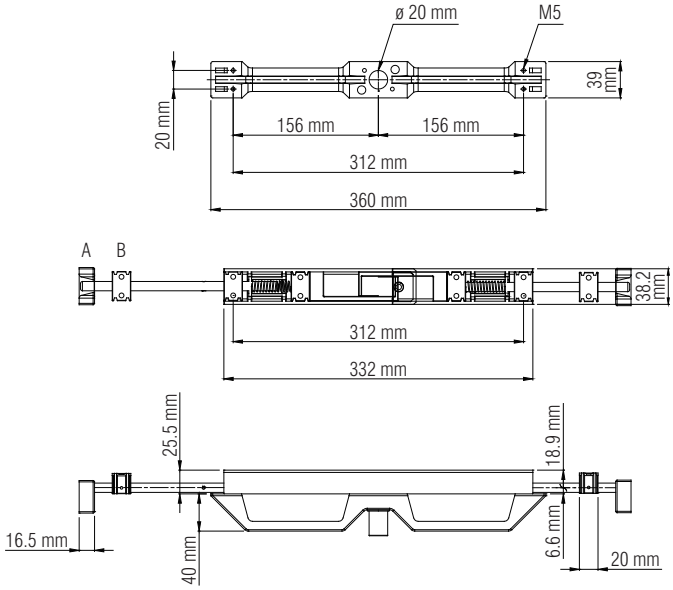

Designation	Weight	Item No.
	kg	
Locking Handle with 2 pieces 500 mm stainless steel rods	1.70	*
Locking Handle with 2 pieces 750 mm stainless steel rods	2.10	*

Packing Unit – Set, all Lengths: 1

* on request

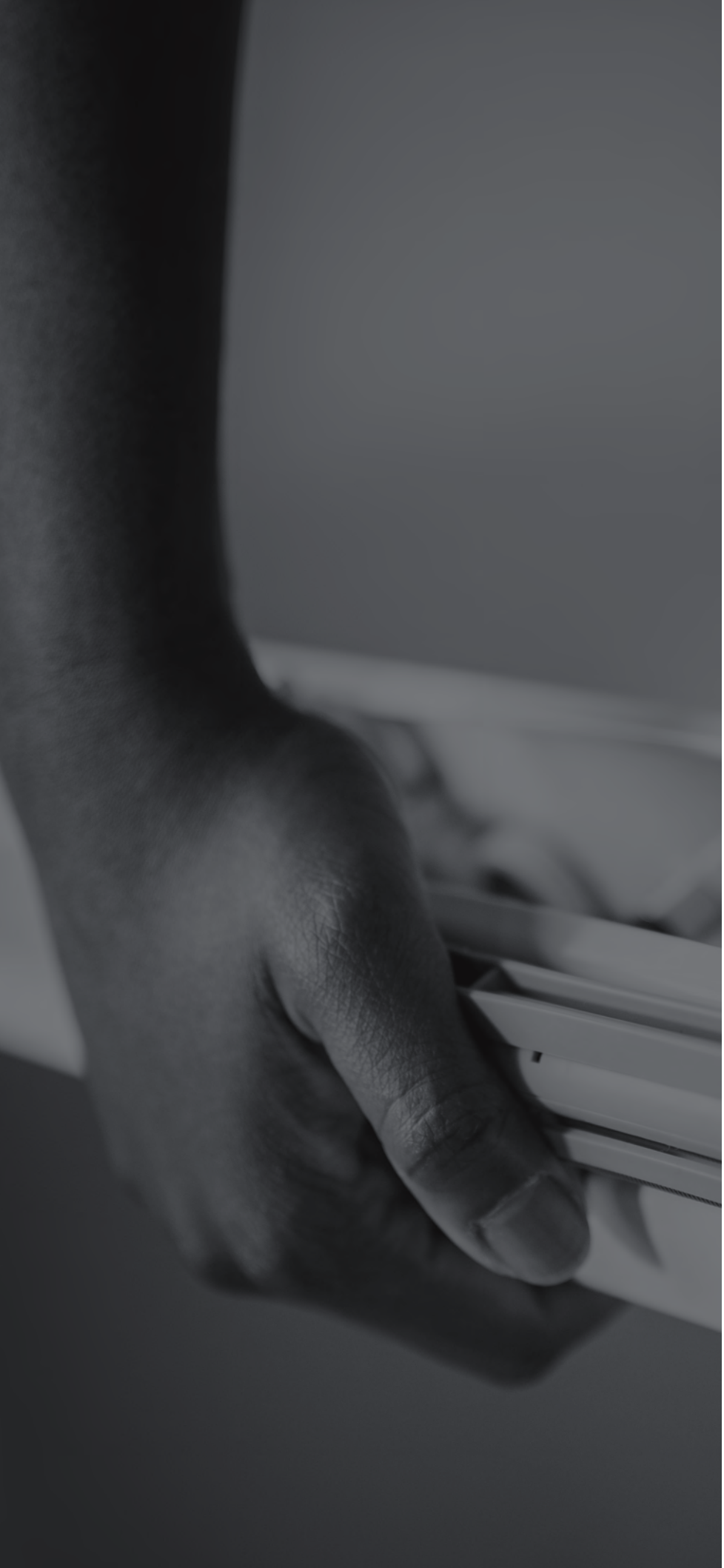

Legend on the inside.

Fulterer

FULTERER Drawer Slide Systems 2020

For general terms and conditions see:
www.fulterer.com/AGB

IMPRINT

Illustrations, dimensions and technical data shown in this catalogue are for illustrative purposes only and may be changed and adapted to new requirements at any time. We reserve the right to apply design changes and product modifications at any time. With the publication of this catalogue, all previous editions are no longer valid. We assume no liability for typographical and printing errors. All rights reserved. Use of texts and illustrations or reprints – also in extracts – only with our written permission. All deliveries are subject to the FULTERER Terms and Conditions of Sale, Delivery and Payment (GTC), which can be inspected on www.fulterer.com.

© FULTERER AG & Co KG – Lustenau, Austria 2020

LEGEND

- bottom mount
- side mount
- top mount
- floor mount
- built-in width
- type of roller
- ball bearing cage
- material
- temperature range
- load capacity
- integrated ECD
- optional ECD
- NSF approved

MOUNTING INSTRUCTIONS

Detailed mounting instructions, and technical drawings for all products on:
www.fulterer.com

FULTERER AG & CO KG
Höchster Strasse 11
Postfach 67
6890 Lustenau
AUSTRIA

T +43 5577 8130
F +43 5577 8130 129
info@fulterer.com
www.fulterer.com

FULTERER AG
Industriestrasse 35
9430 St. Margrethen
SWITZERLAND

T +41 71 747 61 61
F +41 71 747 62 29
info@fulterer.com
www.fulterer.com

FULTERER USA INC.
542 Townsend Avenue
High Point
NC 27263-4552
USA

T +1 336 431 4646
F +1 336 431 4620
info@fultererusa.com
www.fultererusa.com

FULTERER GUANGZHOU TRADING CO. LTD.
1-11 of No. Workshop,
Meng Du Mei Industrial
Park, Qing He East Road,
Shiqi Town,Panyu District
Guangzhou City
CHINA

T +86 20 313 60 424
china@fulterer.com
www.fulterer.com

FULTERER MÉXICO S. DE R.L. DE C.V
Av. Morelos 26-28
CP 06040 Ciudad de México
MÉXICO

T +52 55 2345 3248
info@fulterer.com
www.fulterer.com