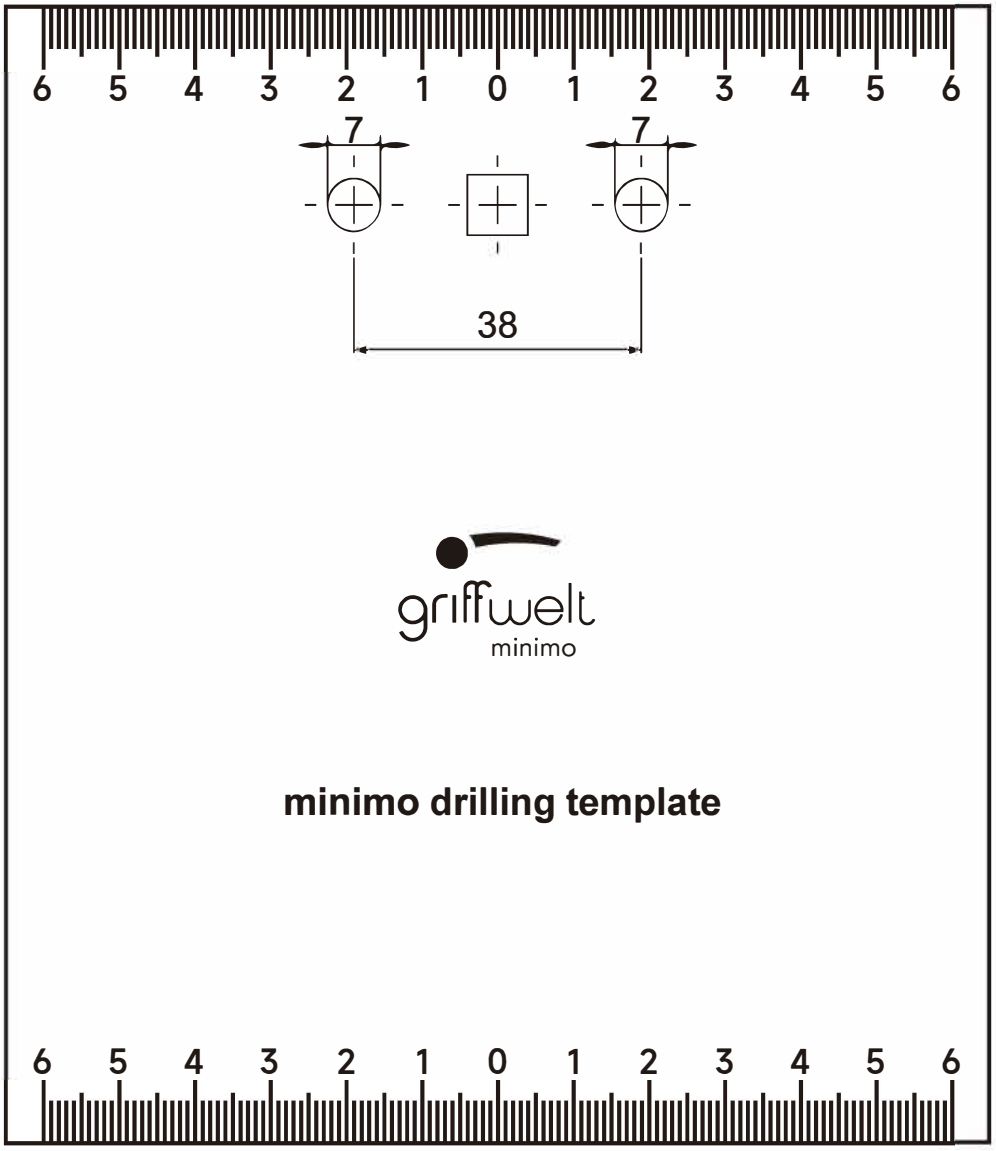
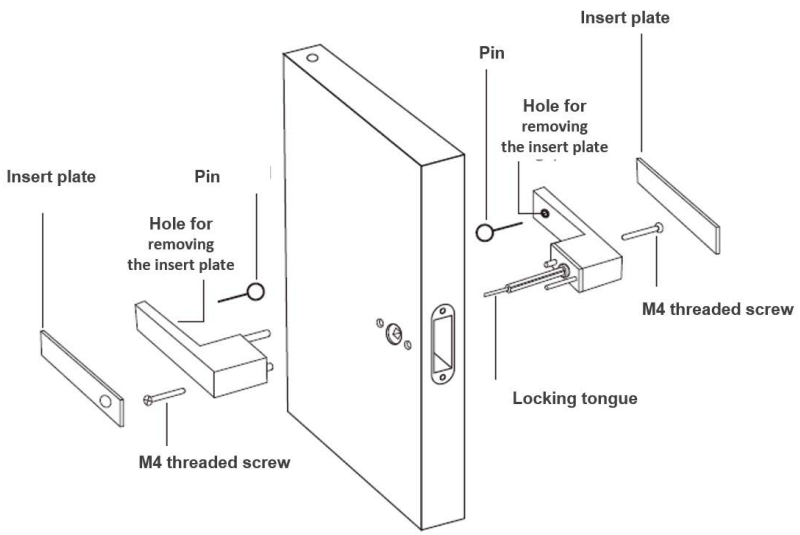
1. Insert the pre-assembled handle into the mortise lock.
2. Place the drilling template onto the square spindle on the opposite side, align it with the door, and secure it. Then, transfer the required drilling marks onto the door leaf.
3. Use a 7 mm wood drill bit to drill into one side of the door leaf. Ensure the drilling is straight and **DO NOT drill through the door!**
4. **Repeat steps 1-3 on the other side of the door.**
5. Remove the inserts from both door handles (a pin is included to release the inserts from the inside of the handle).
6. Clean the drill holes and insert the pre-assembled handle with the square spindle through the square nut of the lock. Attach the handle on the opposite side, ensuring it is horizontally aligned,and secure it using the included M4 threaded screws (tighten both screws evenly). Important: For the lockable version, the locking tongue must be horizontal, and the sliding bolt on the opposite side must be open ("GREEN").
7. Perform a functionality test.