opk Sailing 4 wood 30kg Mounting Instruction

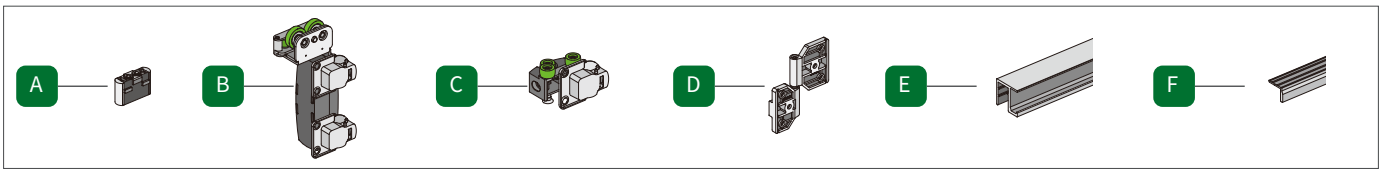

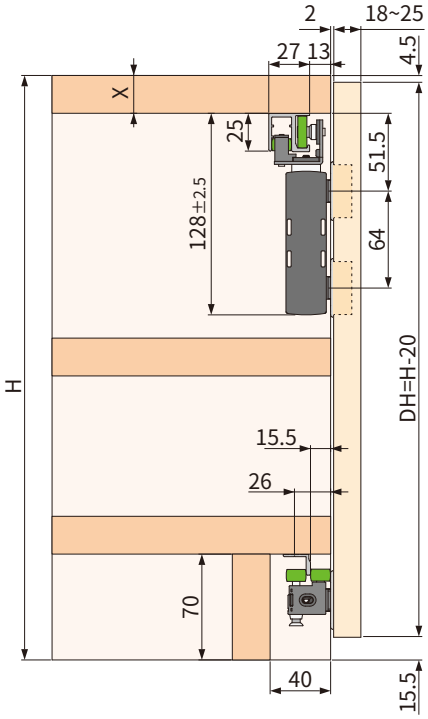

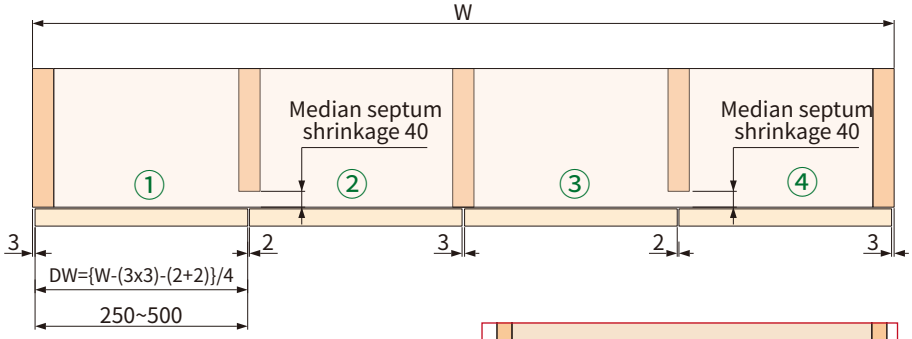

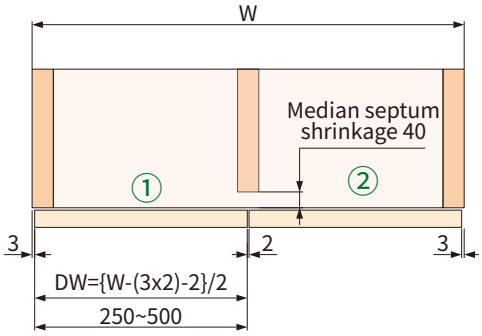

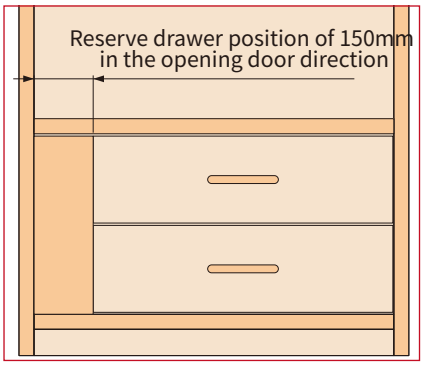

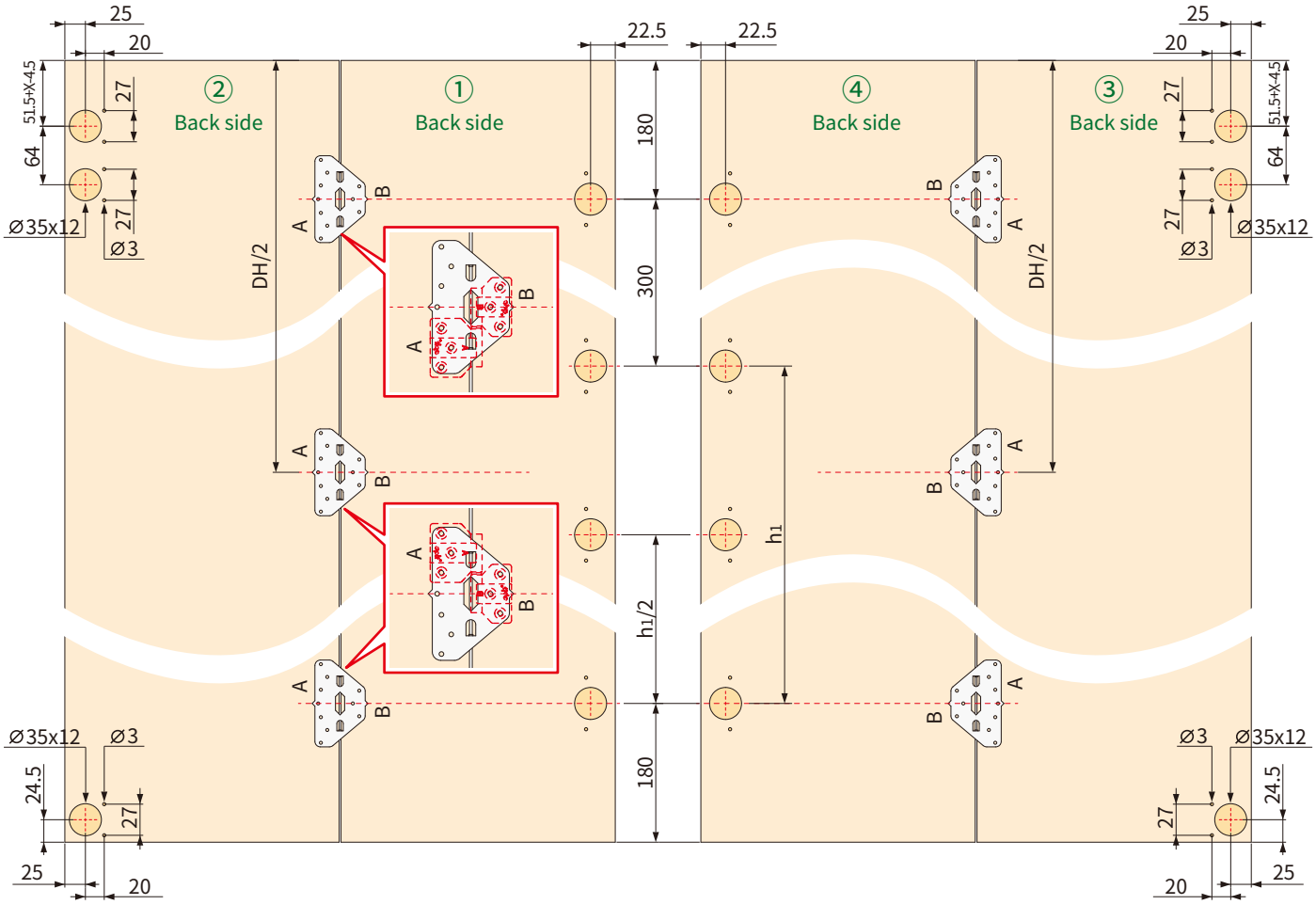

1 Install the track fittings

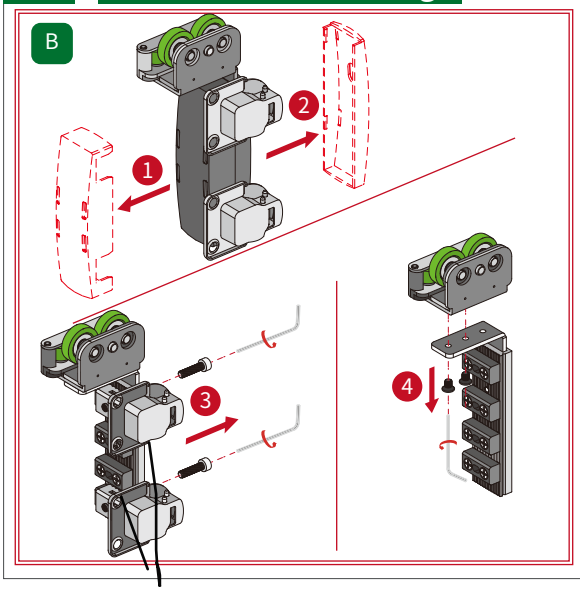

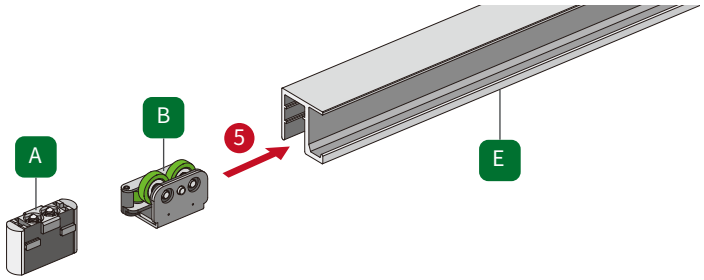

6 Push the stopper to the edge of track

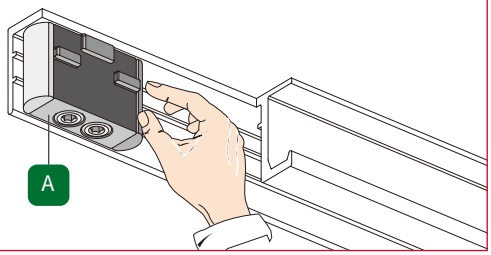

2 Install track

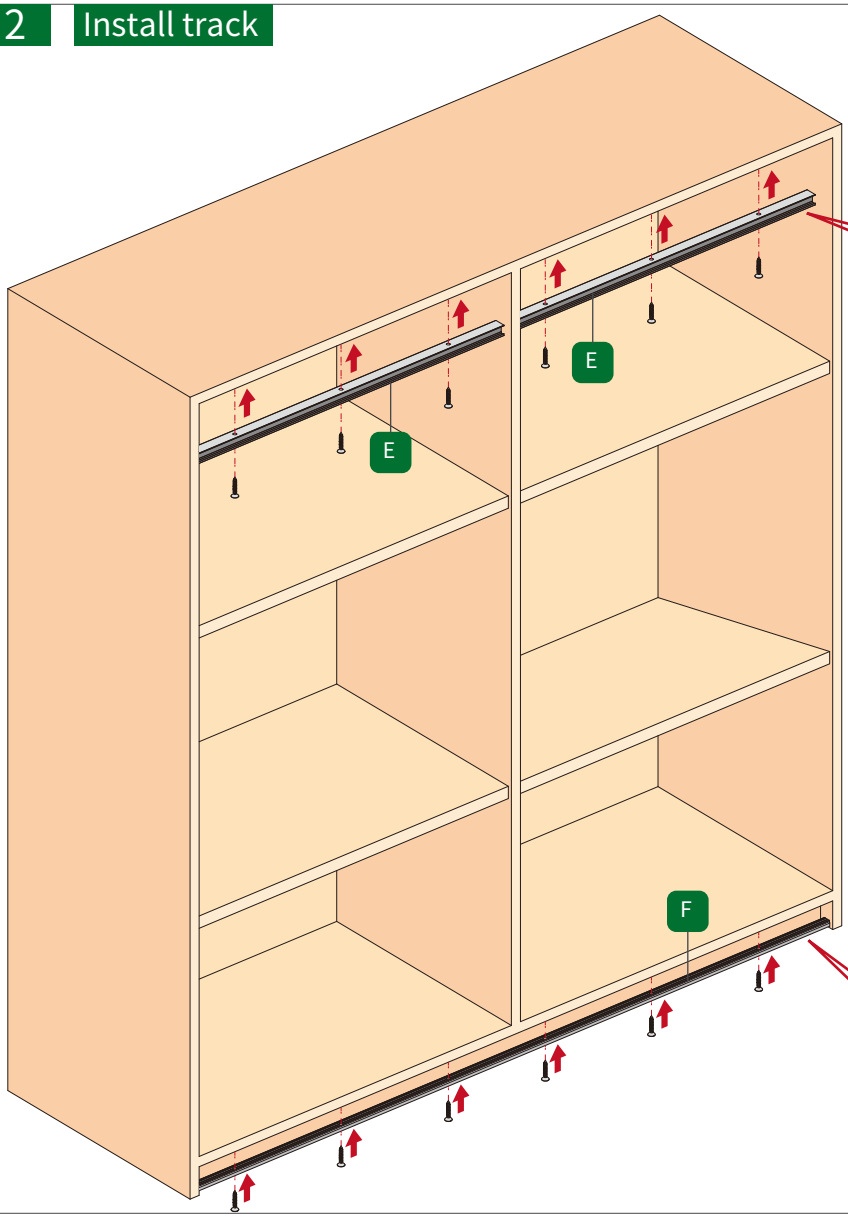

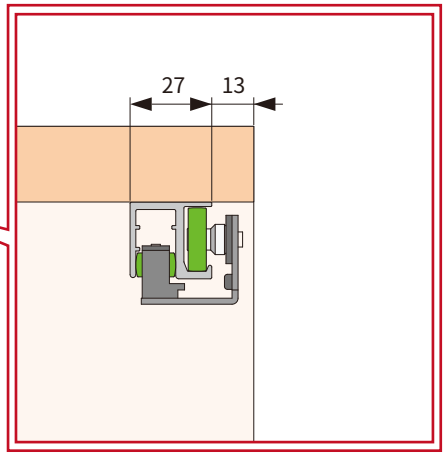

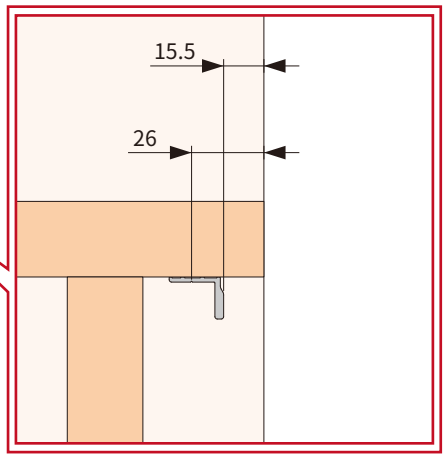

3 Install door panel fittings

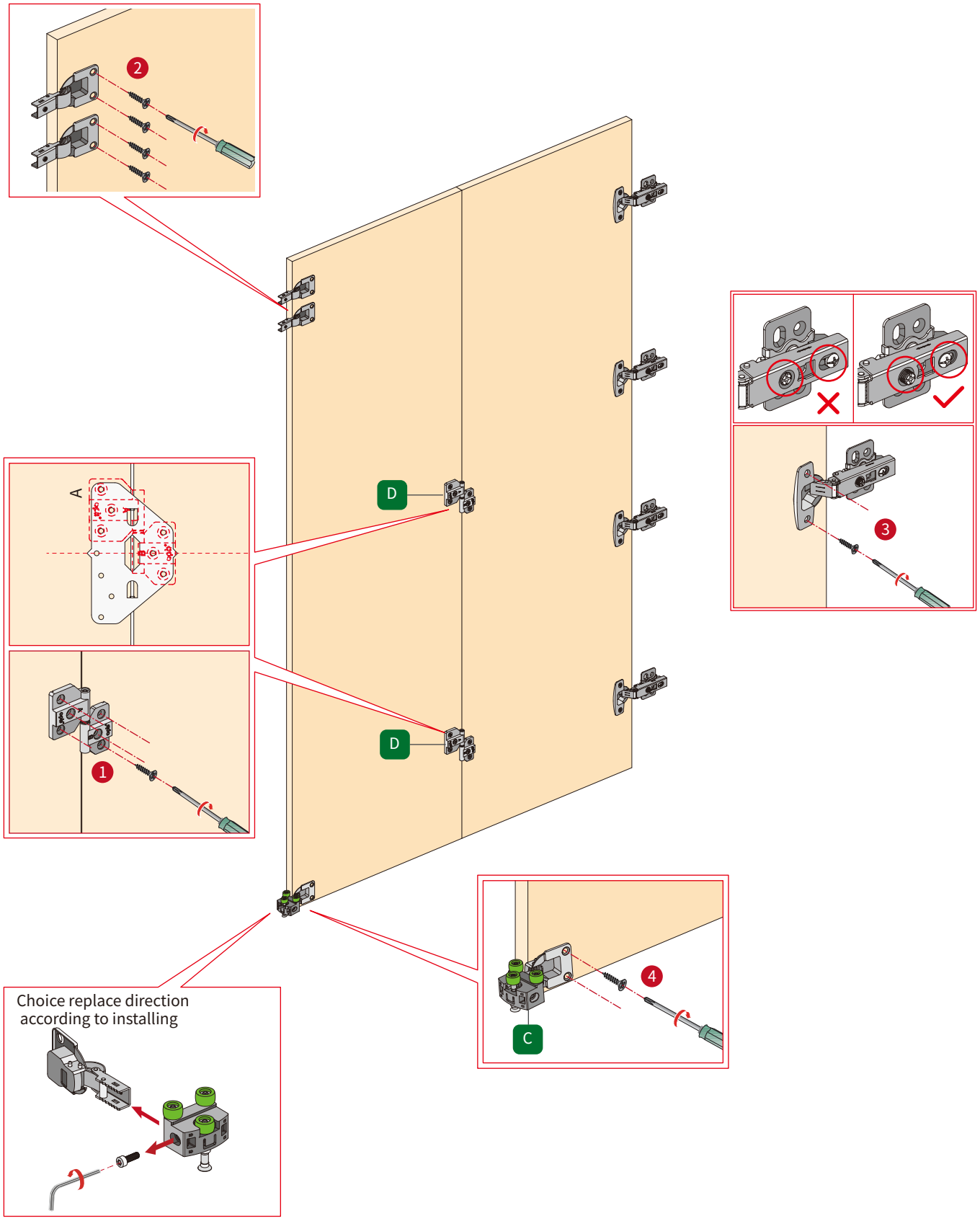

4-1 Install door panel

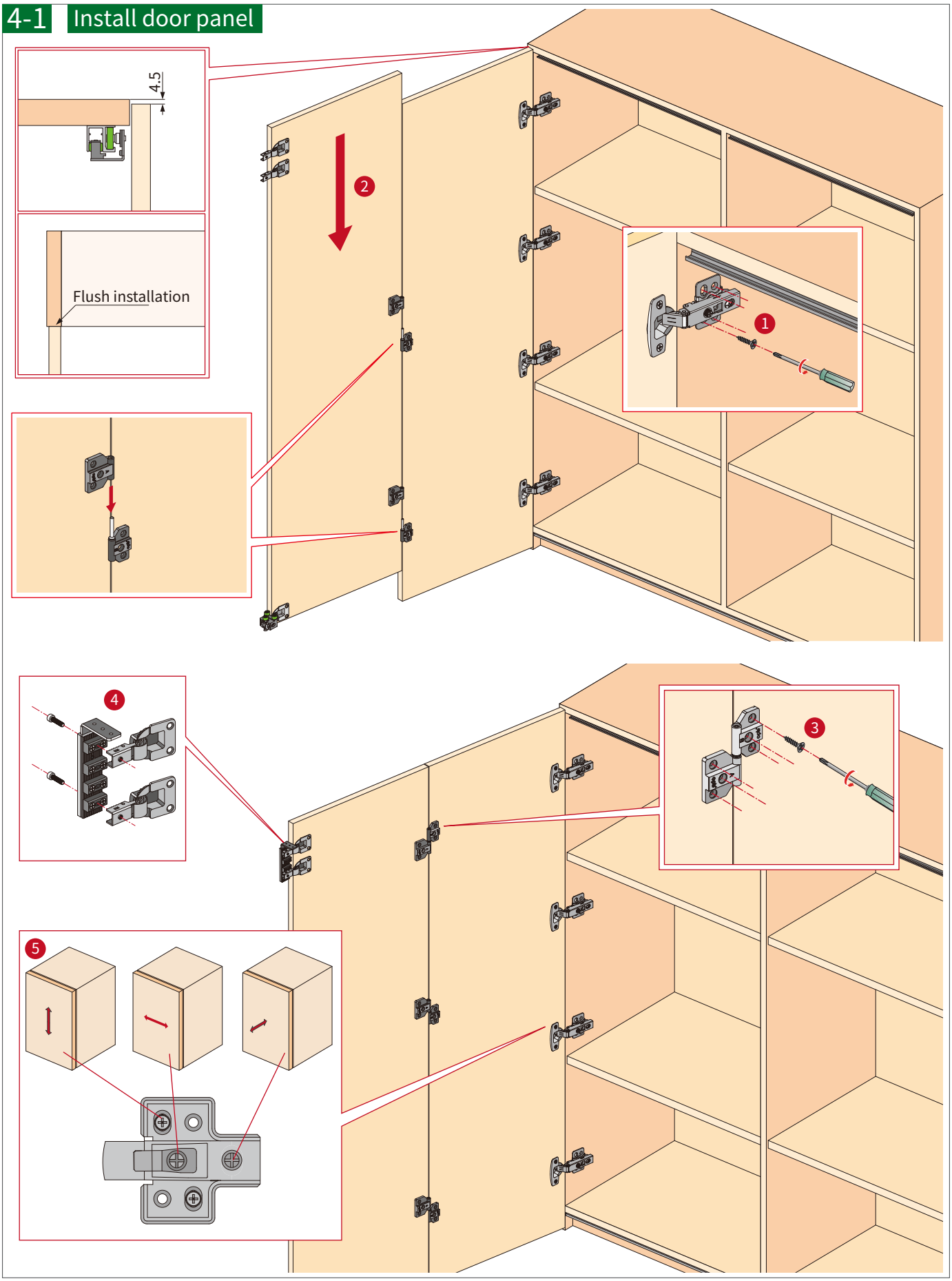

4-2 Install door panel Adjust the balance of the door panel

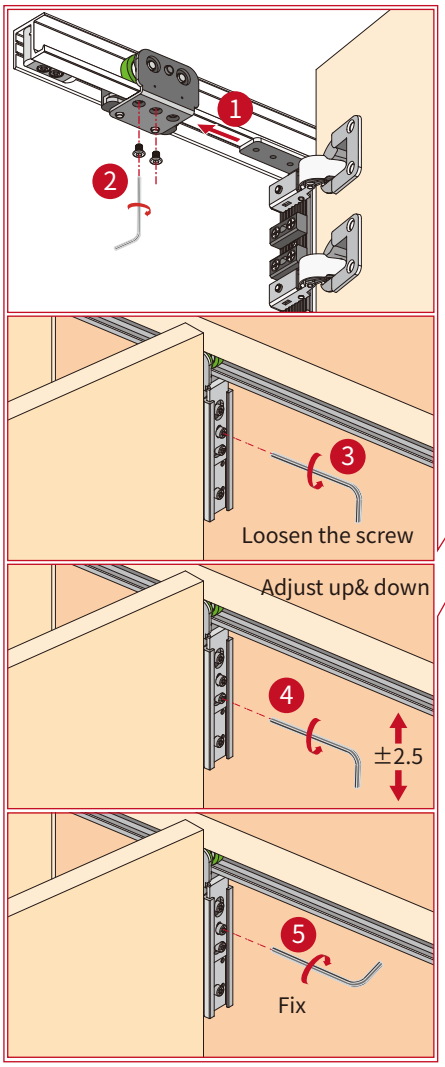

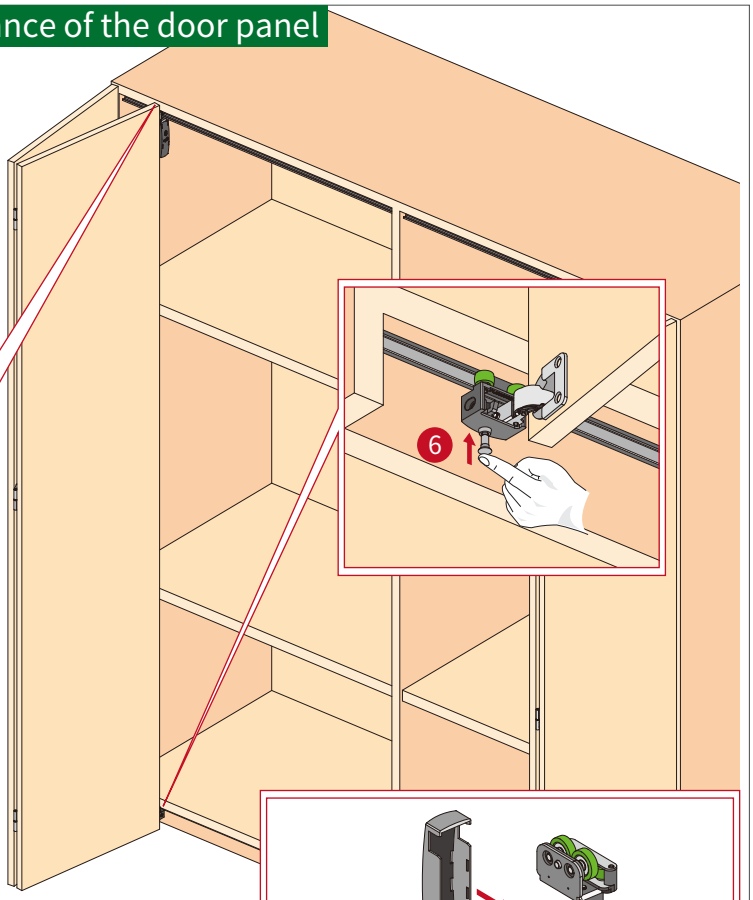

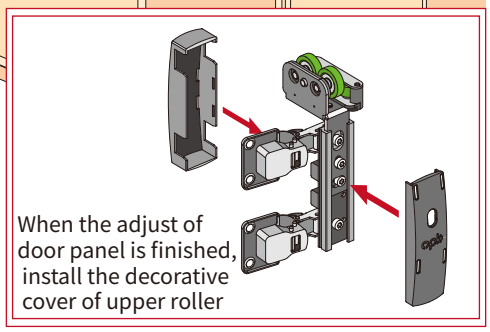

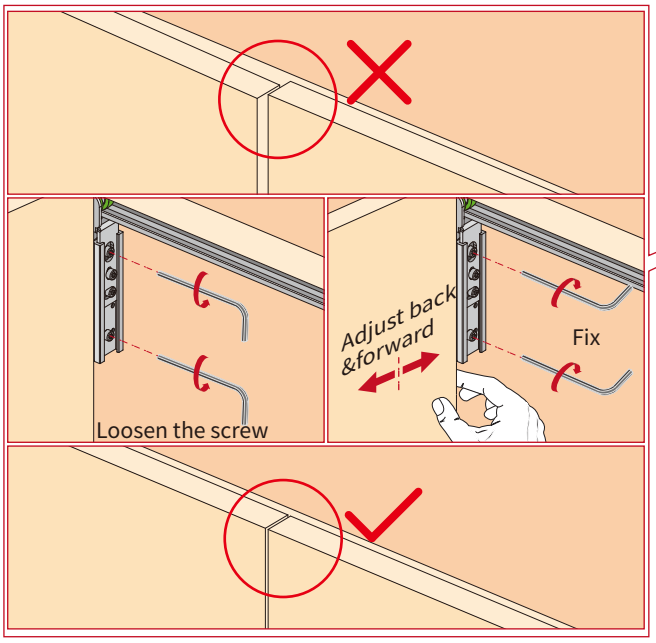

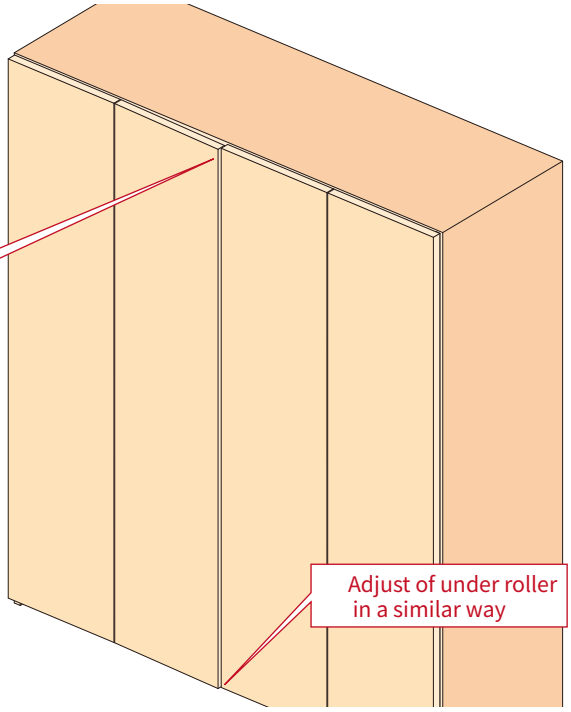
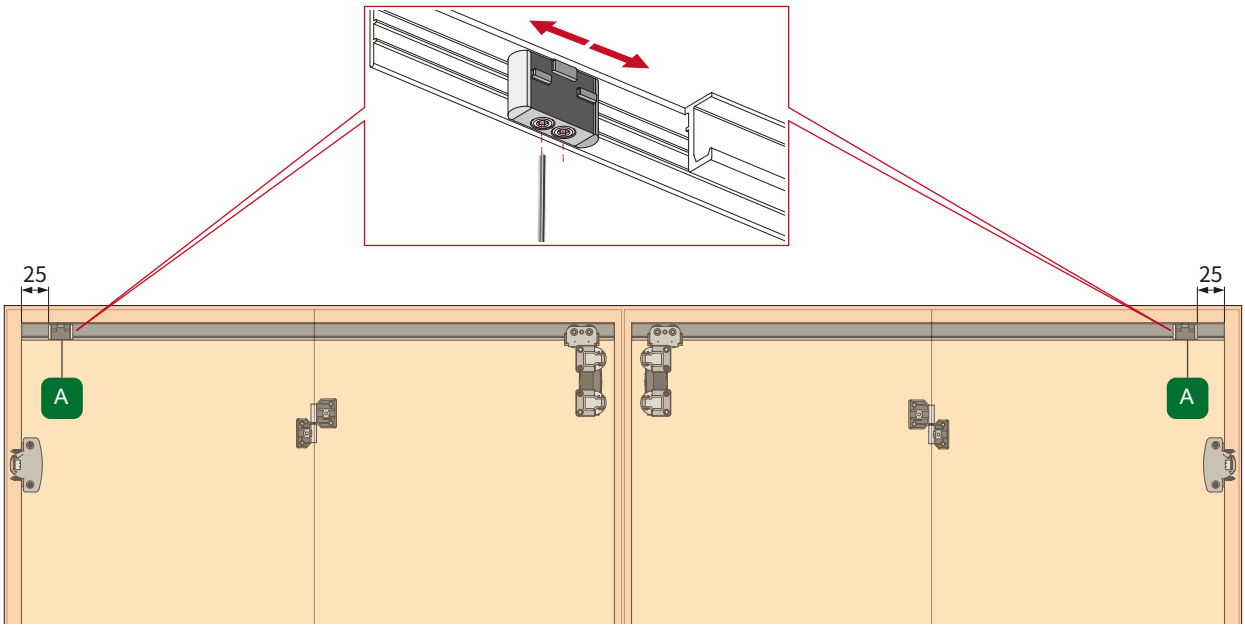
5 Location stopper