E-Space Electromagnetic Lock Mounting Instruction

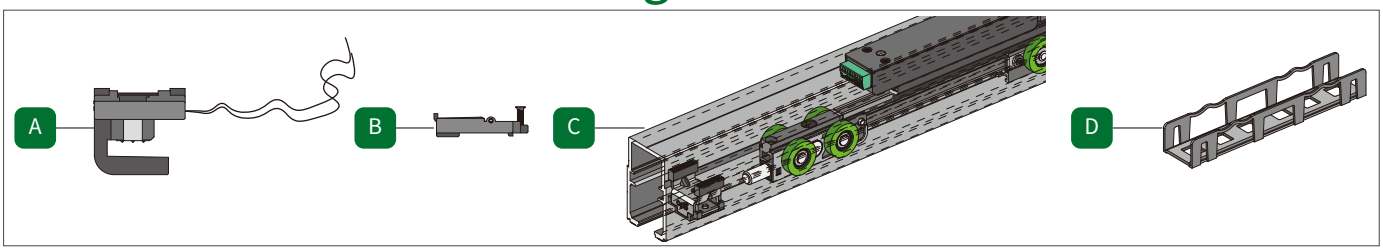

1

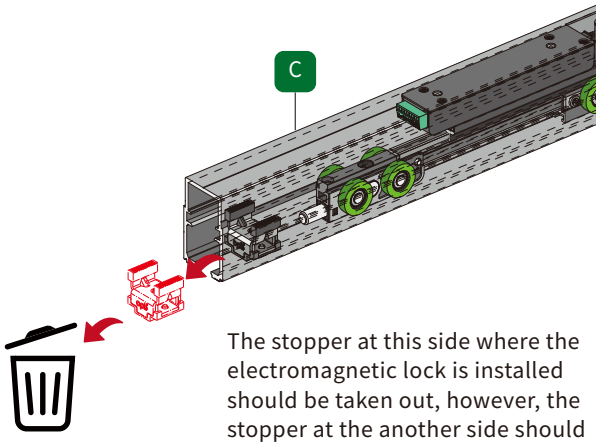

The stopper at this side where the electromagnetic lock is installed should be taken out, however, the stopper at the another side should be kept.

2

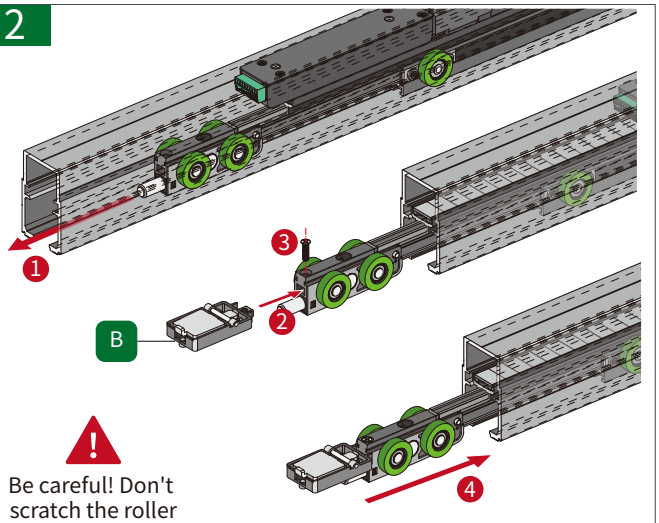

Be careful! Don't scratch the roller

3

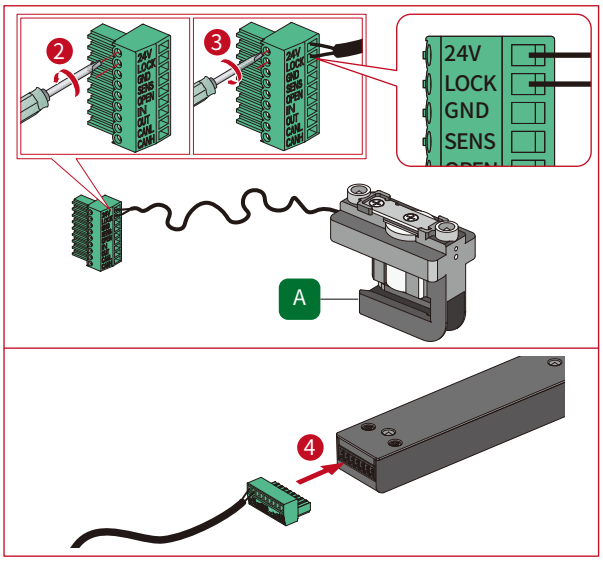

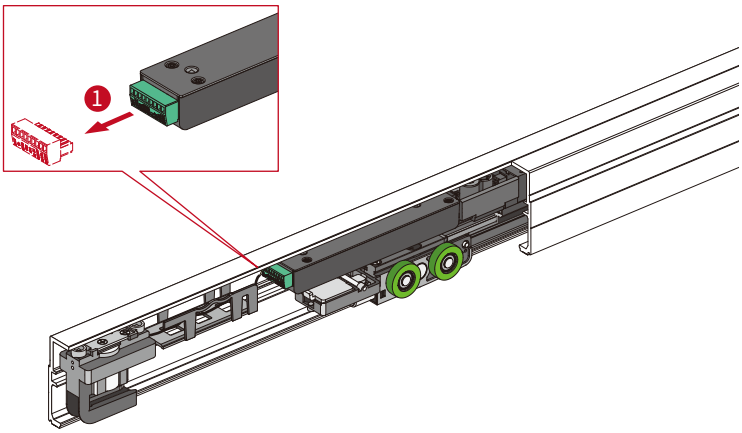

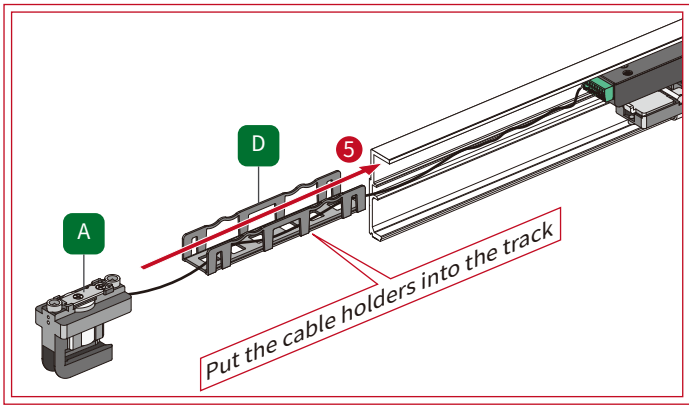

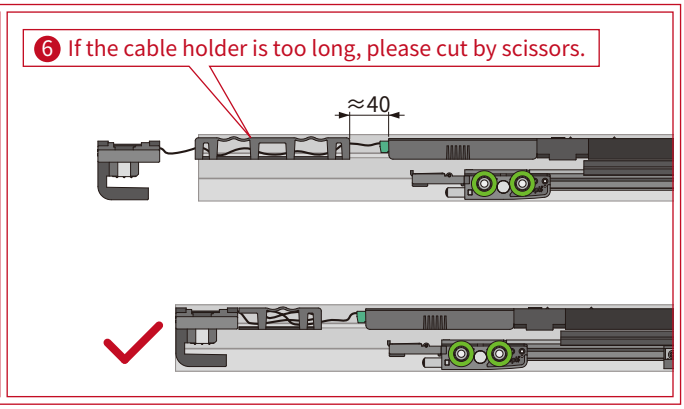

4

Single system

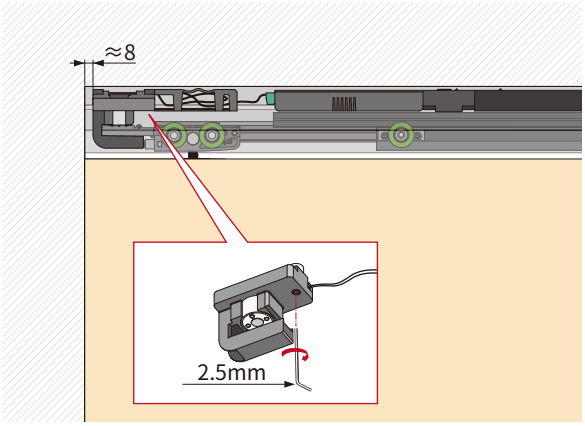

Double systems

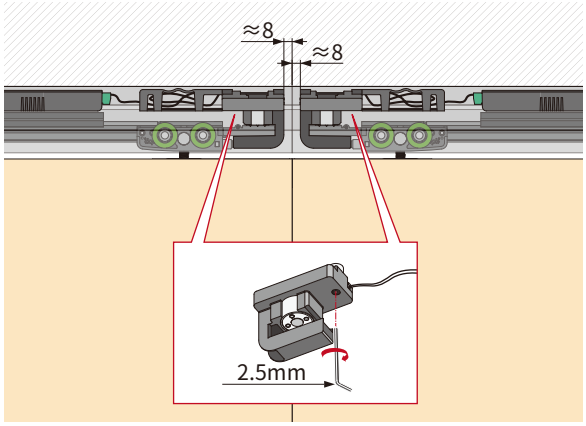
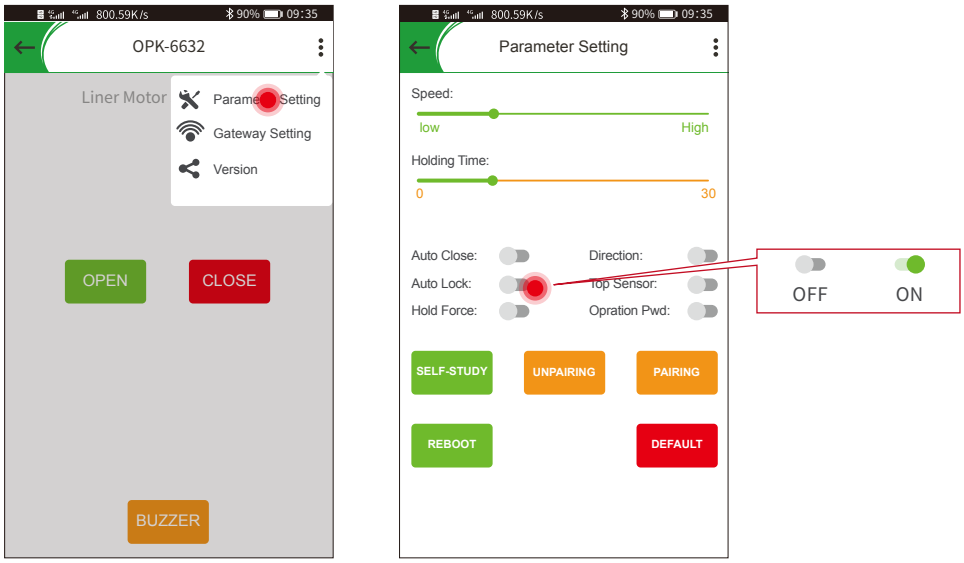
5 Turn on the Auto Lock in the app