drawn on the left (mirrored on the right)

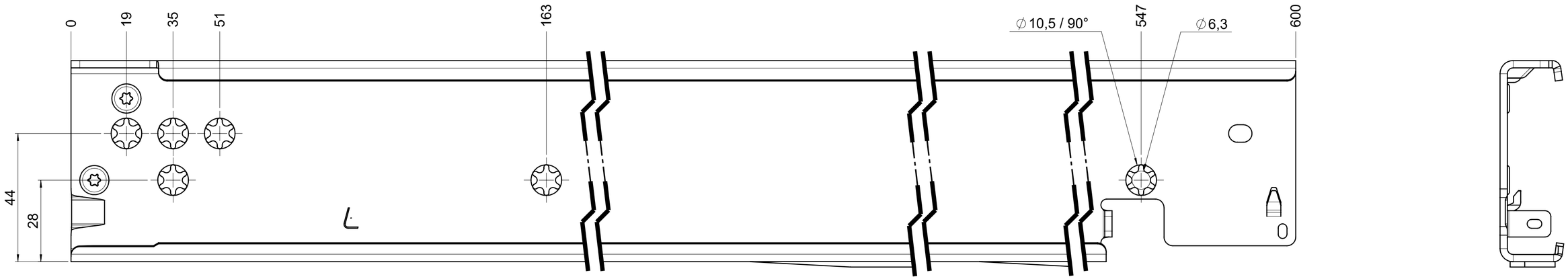

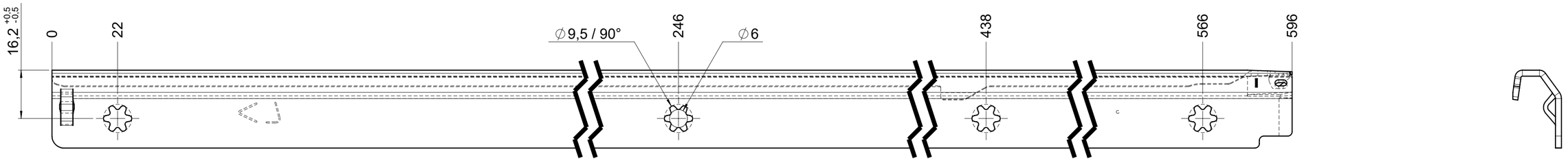

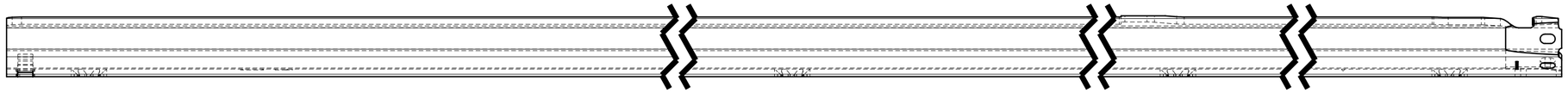

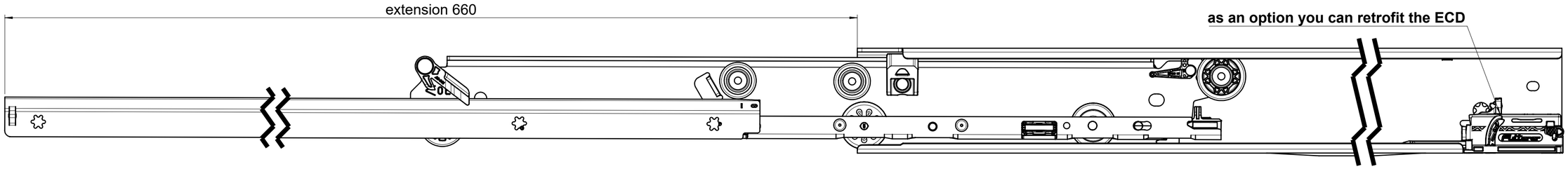

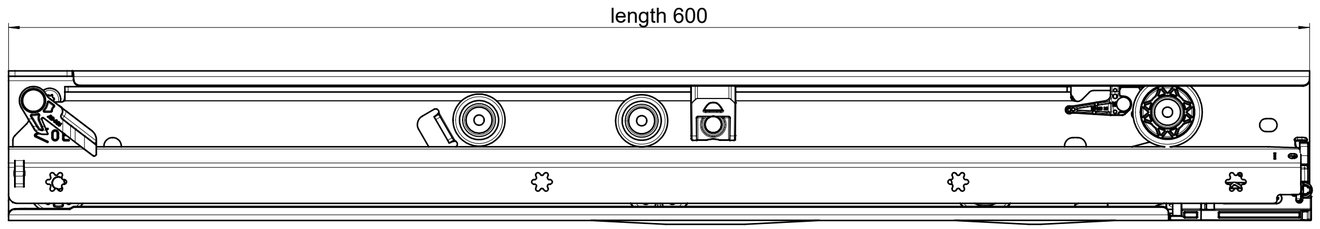

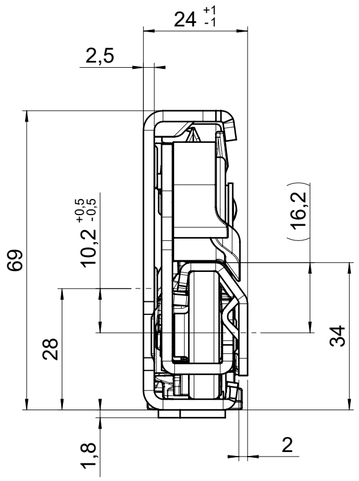

final approval	
	customer name:
	signed by:
	date:

all dimensions in mm

missing dimensions see 3D = theor. intersection	DIN ISO 128-30	scale: 1:1	surface/color:	material: (technical requirements Fulterer) **CS**
released				description: **FR 7095-600 CS EN (mm)** progressive-action over-extension drawerslide / side mount
				drawing number: CS# 7095.600-GA.L130
				replaces the edition:

	date	name
drawn	2025-09-05	PH
proven	2025-10-13	RP

ind.	changes	date	name

Fulterer

Fulterer AG & Co KG
A-6890 Lustenau

Fulterer AG
CH-9430 St. Margrethen

A2

This drawing remains our property and may not be multiplied neither be disclosed to third parties (§§1,3 and 5 from the copyright Act (UrhG)).

covered according to DIN ISO 16016