Minimo Mini – Installation Instructions:

1. **Remove the Cover Plates**
   Remove the cover plates **from both lever handles**. To do this, press them out at the end of the handle using your thumb and index finger.

2. **Install the Lever Handles**
   Insert the lever handle with the square spindle through the lock follower, then fit the handle on the opposite side and align both handles horizontally.

   Note for the lockable version:
   Before assembling the handles, align the locking tongue horizontally and set the sliding bolt to the green position.

3. **Fasten the Handles**

Secure both sides together using the two supplied M4 machine screws and tighten them evenly.

4. **Perform a Functional Check**

Remove the Cover Plates

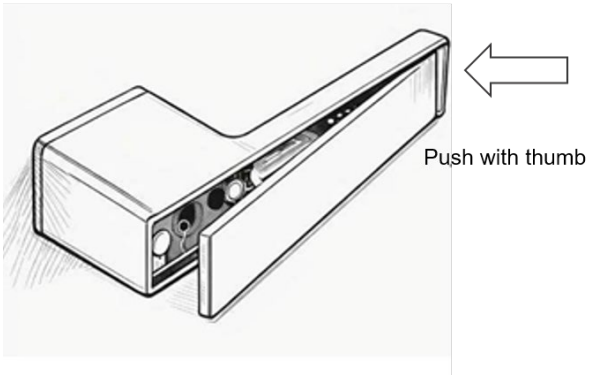

griffwelt