CO_2 Duct and Rough Service Sensor

Installation & Operating Instructions

40698_ins_CO2_3LED_BB rev. 01/17/25

Identification and Overview

The BAPI CO_2 Duct Sensor is an accurate and reliable way of incorporating demand controlled ventilation. It measures CO_2 in ranges of 0 to 2,000, 0 to 2,500, 0 to 5,000, 0 to 10,000 and 0 to 50,000 ppm with a field selectable output of 0 to 5 or 0 to 10 VDC.

BAPI's Dual Channel "24/7" unit is optimized for continuously occupied areas and features a 3-point calibration process for enhanced accuracy and reliability.

Altitude and weather patterns can affect CO_2 sensors, even putting them outside of their specified accuracy. The BAPI unit has a built-in Barometric pressure sensor that continuously compensates the output for accurate readings despite the weather or altitude.

The Duct unit samples air using an aspiration tube. The Rough Service unit features a ventilated BAPI-Box and is ideal for areas such as outdoor air plenums, equipment rooms, green houses and warehouses. The 0 to 2,000 and 0 to 2,500 ppm units include CO_2 level indication by three LEDs on the front of the unit.

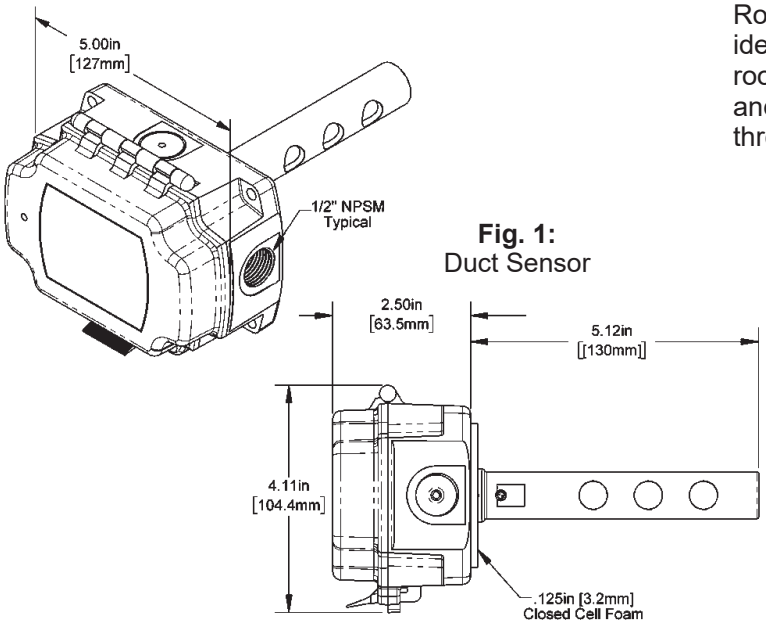

Fig. 1: Duct Sensor

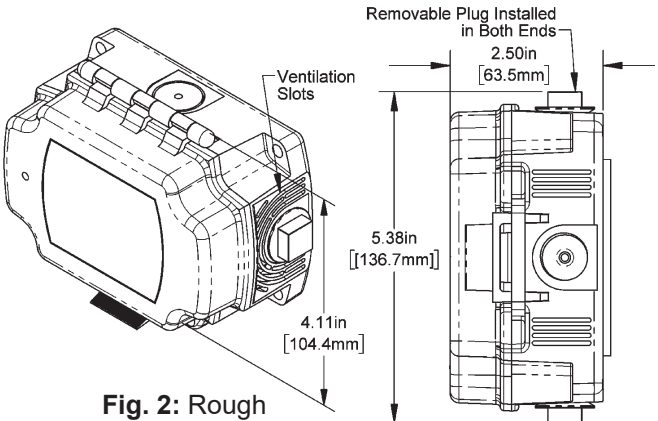

Fig. 2: Rough Service Sensor

Specifications

Power: 12 to 24 VDC, 240 mA ● 18 to 24 VAC, 12 VA Peak

CO_2 Sensing Element: Dual Channel Non-Dispersive Infrared

Field Selectable Voltage Output: 0 to 5 or 0 to 10 VDC

Termination: 3 Terminals, 16 to 22 AWG

Operating Environment:
32 to 122°F (0 to 50°C) ● 0 to 95%RH non-condensing

CO_2 Detection ppm Range:
0 to 2,000, 0 to 2,500, 0 to 5,000, 0 to 10,000 and 0 to 50,000

Start-Up Time: <2 Minutes

Response Time:
<2 Min for 90% step change typical (after start-up)

CO_2 Accuracy @ 77°F (25°C) and Sea Level:
0 to 2,000, 2,500 & 5,000 ppm Models:
<±(50 ppm +3% of measured value)
<±75 ppm at 600, 1,000 and 2,500 ppm

0 to 10,000 ppm Models:
<±(100 ppm +5% of measured value)

0 to 50,000 ppm Models:
<±75 ppm or 10% of reading (whichever is greater)

CO_2 Drift Stability:
0 to 2,000, 2,500 and 5,000 ppm Models:
±20 ppm per year

0 to 10,000 ppm Models:
±20 ppm per year

0 to 50,000 ppm Models:
<5% of FS (over 10 years)
or <10% of reading annual

Unventilated BAPI-Box Rating:
NEMA 4, IP66

Enclosure Material:
Polycarbonate, UL94 V-0

LED CO_2 Level Indicator
(for 0 to 2,000 & 2,500 ppm units only):
Good <1,000 ppm
Fair =1,000 to 1,500 ppm
Poor >1,500 ppm

Agency:
CE EN 61326-1:2013 EMC, RoHS,
Addendum ab to ASHRAE Standard 62.1-2022

Specifications subject to change without notice.

Building Automation Products, Inc., 750 North Royal Avenue, Gays Mills, WI 54631 USA
Tel:+1-608-735-4800 • Fax+1-608-735-4804 • E-mail:sales@bapihvac.com • Web:www.bapihvac.com

Mounting Template

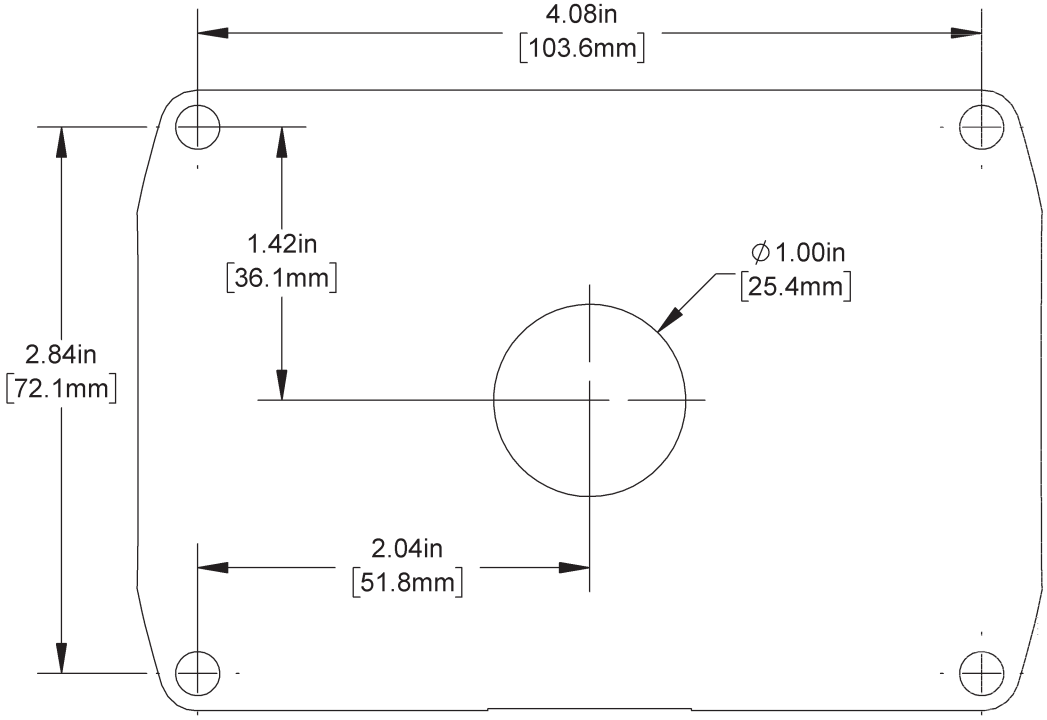

Fig. 3: Mounting Template, Actual Size

Rough Service Unit Mounting

Mount the Rough Service sensor on a solid, non-vibrating surface. Wall mounting in a room should be 3 to 5 feet above floor level. The Rough Service CO_2 transmitter may be mounted in any orientation. If you are mounting inside a duct or mixing box, mount with the latch facing into the moving air.

Refer to local codes for further sensor/transmitter installation information. See BAPI's "Coverage Area" Application Note for further mounting recommendations. To get to this application note, go to www.bapihvac.com, select "Resource Library" from the banner. Click on "Application Notes" then scroll down the page to the heading "Air Quality Related" and chose "Coverage Area and Mounting Recommendations for BAPI Indoor Air Quality Sensors".

1. BAPI recommends #10 (provided) screws of a type and length suitable for the mounting surface. Four mounting screws keeps the box from twisting, twisting may prevent the latch from operating properly. A pilot-hole makes mounting easier. Use the enclosure mounting feet to mark the pilot-hole locations.
2. Snug up the screws so that the foam backing is depressed but do not over-tighten or strip the screw threads.
3. Place the provided #6 screws into the holes on each site of the lid latch to make the cover tamper resistant.

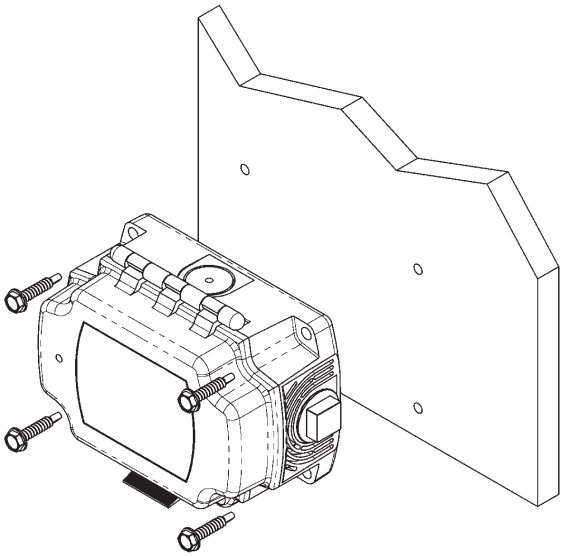

Fig. 4: Mounting the Rough Service sensor to a wall

Duct Unit Mounting

1. BAPI recommends placing the sensor in the middle of the duct wall, away from stratified air, to achieve the best reading. The unit should also be a minimum of 3 duct diameters from an elbow, damper or other duct restriction.
2. Drill a 1” hole for the aspiration probe. Position the box so that airflow is directly into the holes on one side of the aspiration probe. There are no upstream or downstream holes, the air direction is not important.
3. Mount the enclosure to the duct using BAPI recommended #10 screws (provided) through a minimum of two of the mounting feet on opposite corners. A 1/8’ pilot screw hole in the duct makes mounting easier. Use the enclosure mounting feet to mark the pilot-hole locations.
4. Snug up the screws so that the foam backing is depressed to prevent air leakage but do not over-tighten or strip the threads.
5. Use the provided #6 screws to secure the cover for IP66 rating.
6. BAPI recommends sealing the conduit opening with fiberglass insulation.

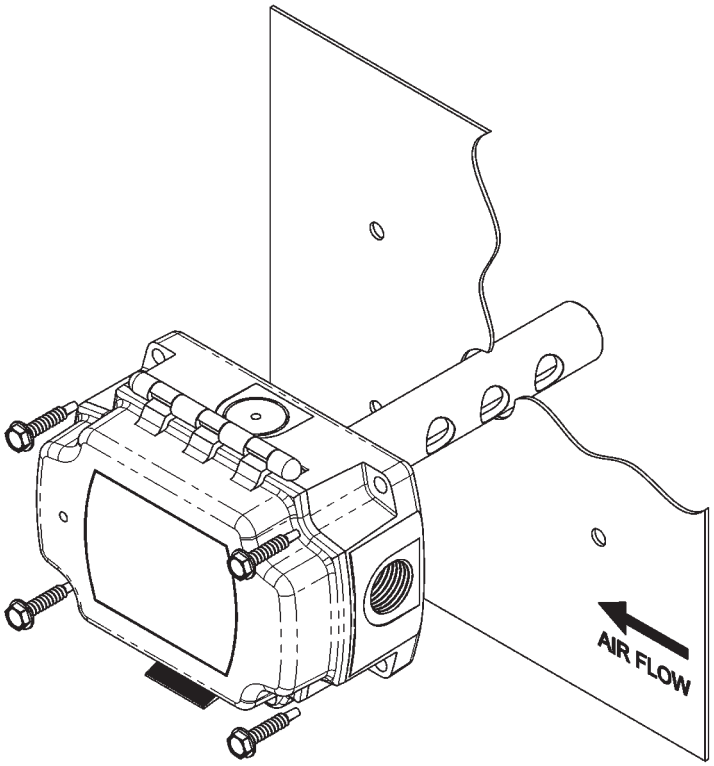

Fig. 5: Duct unit mounting

Termination

BAPI recommends using twisted pair of at least 22AWG and sealant filled connectors for all wire connections. Larger gauge wire may be required for long runs. All wiring must comply with the National Electric Code (NEC) and local codes. Do NOT run this device's wiring in the same conduit as AC power wiring. BAPI's tests show that fluctuating and inaccurate signal levels are possible when AC power wiring is present in the same conduit as the signal lines.

> BAPI recommends wiring the product with power disconnected. Proper supply voltage, polarity, and wiring connections are important to a successful installation. Not observing these recommendations may damage the product and will void the warranty.

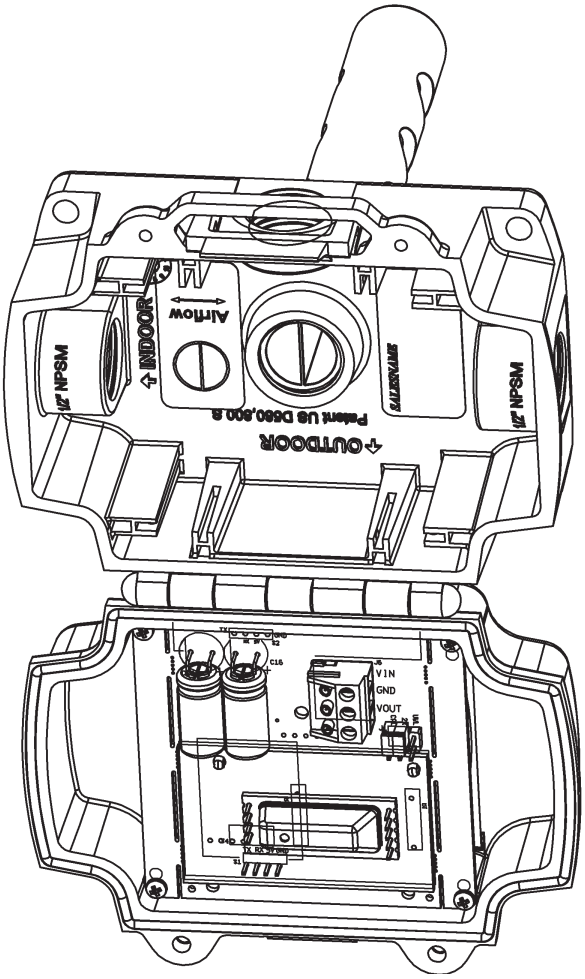

Fig. 6: Circuit board on open unit

Terminal	Function
VIN.....	12 to 24 VDC, 240mA 18 to 24 VAC, 12 VA Peak
GND.....	To controller Ground [GND or Common]
VOUT.....	Voltage Output, CO_2 Signal 0 to 5 or 0 to 10 VDC, Referenced to GND

The CO_2 outputs may be field configured for 0 to 5 VDC or 0 to 10 VDC outputs at any time. Set the jumpers on J1 as shown in Figures 7 and 8.

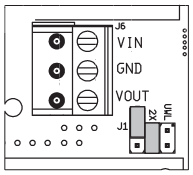

Fig. 7: J1 set for 0 to 10 VDC output

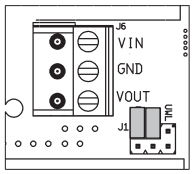

Fig. 8: J1 set for 0 to 5 VDC output

POWERING WITH A BAPI VC350A VOLTAGE CONVERTER

The CO_2 unit requires 240mA of current to operate correctly. If this is more current than can be provided by the controller power output, then the unit can be powered by a BAPI VC350A or VC350A-EZ Voltage Converter.

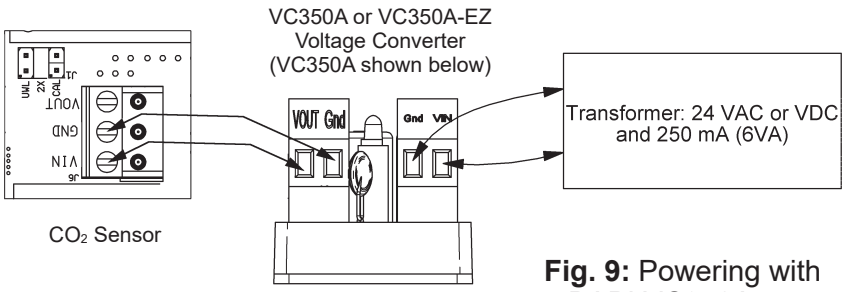

Fig. 9: Powering with a BAPI VC350A

Keeping the Enclosure Air Tight After Termination

For the sensor to work correctly, the wiring entrance must remain air tight. If the CO_2 transmitter is mounted to a hollow wall and wired through its back, or wired with conduit, it is possible that a draft of clean air may fill the enclosure through the wiring opening. This draft may prevent the unit from measuring ambient CO_2. BAPI recommends either a liquid-tight fitting or plugging the conduit at the enclosure.

• **Liquid-Tight Fitting** – BAPI's Liquid-Tight Fitting (BA/LTF) allows wire cables of 0.1 to 0.3 inch outside diameter to enter the box. Tightening the collar onto the wire cable keeps the wiring entrance air tight.

• **Conduit** – Included with the CO_2 transmitter is a foam plug to seal the ½ inch EMT. Place the wires into the plug as shown in Fig. 10 and then insert the plug into the conduit sealing the conduit.

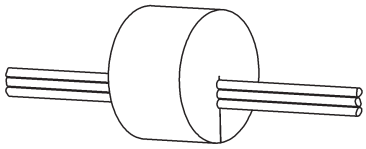

Fig. 10:
Wires Through Foam Plug

Diagnostics

Possible Problems:	**Possible Solutions:**
General troubleshooting	Determine that the input is set up correctly in the controller's and building automation software.
	Check wiring at the sensor and controller for proper connections.
	Check for corrosion at either the controller or the sensor. Clean off the corrosion, re-strip the interconnecting wire and reapply the connection. In extreme cases, replace the controller, interconnecting wire and/or sensor.
	Check the wiring between the sensor and controller. Label the terminals at the sensor end and the controller end. Disconnect the interconnecting wires from the controller and the sensor. With the wires disconnected, measure the resistance from wire-to-wire with a multimeter. The meter should read greater than 10 Meg-ohms, open or OL depending on the meter. Short the interconnecting wires together at one end. Go to the other end and measure the resistance from wire-to-wire with a multimeter. The meter should read less than 10 ohms (22 gauge or larger, 250 feet or less). If either test fails, replace the wire.
	Check power supply/controller voltage supply
	Disconnect sensor and check power wires for proper voltage (see specifications on page 1)
Incorrect CO_2 Reading	Wait 15 minutes after a power interruption.
	Check all BAS controller software parameters.
	Determine if the sensor is exposed to an external environment different from the duct area that is being measured.
	If the sensor is reading consistently high, make sure that the power supply to the unit can provide 240mA. A low power situation will cause high CO_2 readings.
	Note: If the CO_2 sensor has consistently given high PPM readings for over 5 days, it will take up to 14 days for the readings to return to normal.