drawn on the left (mirrored on the right)

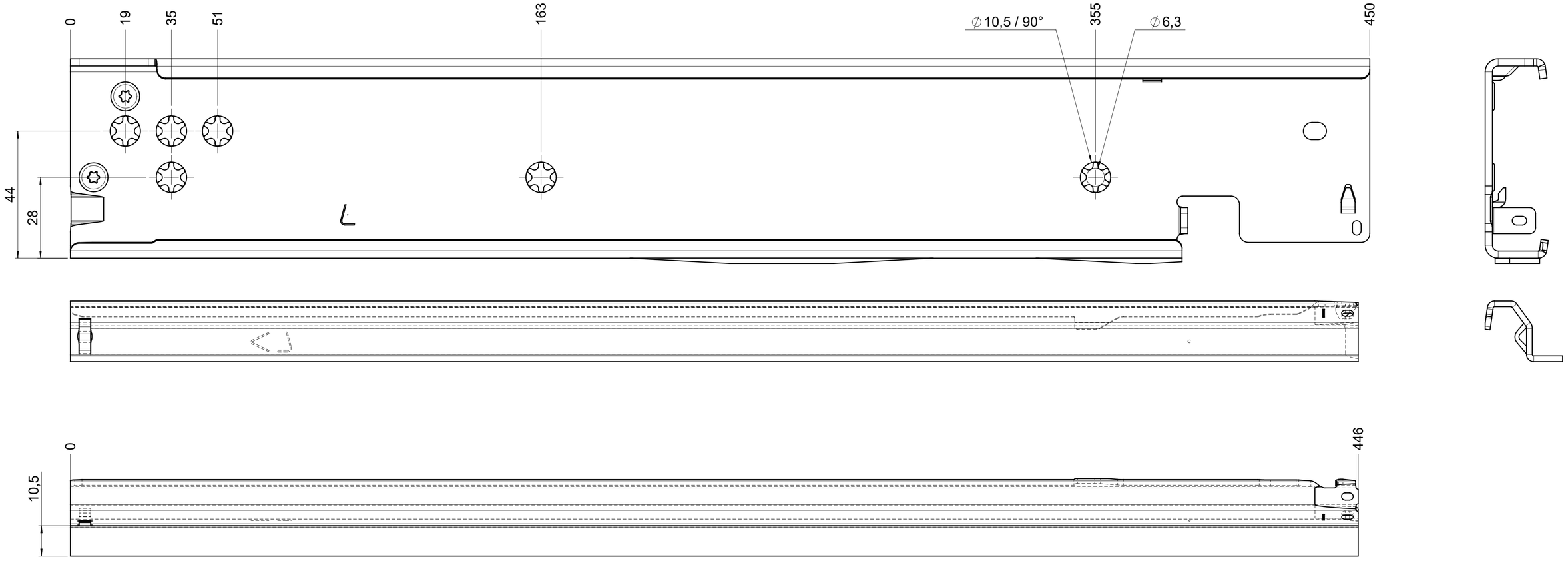


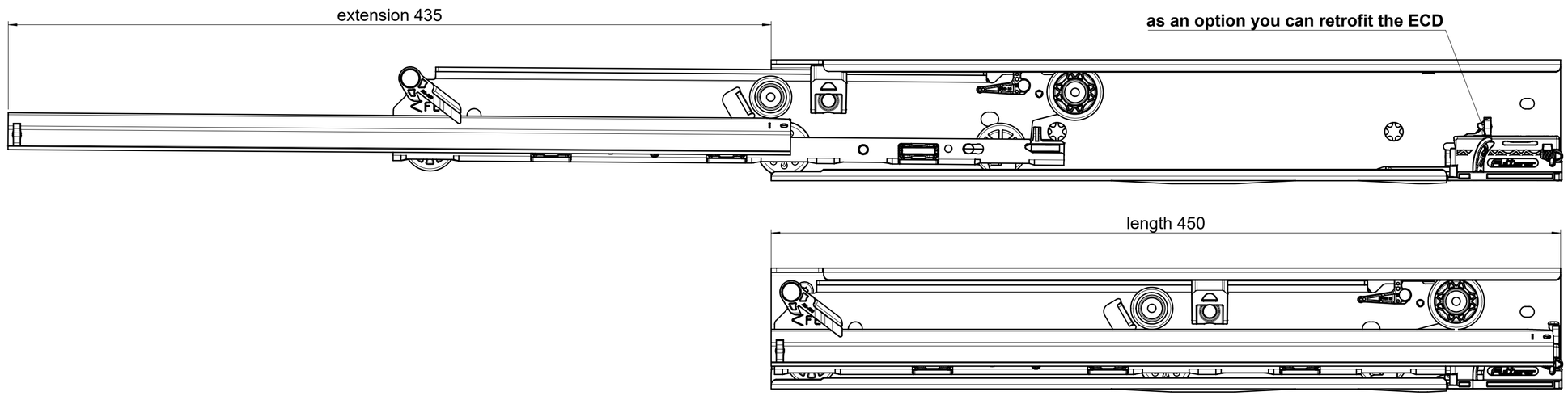


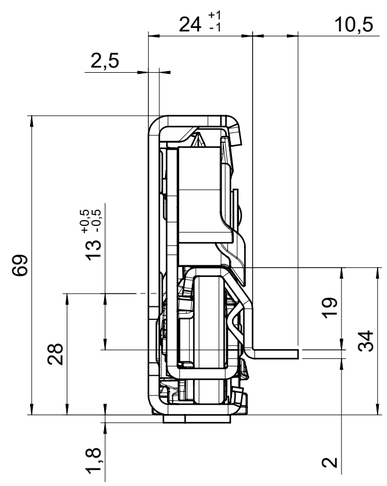


| final approval | |
|---|---|
| | customer name: |
| | signed by: |
| | date: |

**all dimensions in mm**

| | | | |
|---|---|---|---|
| missing dimensions see 3D<br>= theor. intersection | DIN ISO 128-30 | scale: **1:1** | surface/color: |
| **released** | | | |

| | date | name |
|---|---|---|
| drawn | **2025-09-11** | **PH** |
| proven | **2025-10-14** | **RP** |

| ind. | changes | date | name |
|---|---|---|---|
| | | | |

Fulterer

**Fulterer AG & Co KG**
A-6890 Lustenau

**Fulterer AG**
CH-9430 St. Margrethen

material: (technical requirements Fulterer)
**CS**

description:
**FR 7096-450 CS EN (mm)**
progressive-action full-extension
drawerslide / bottom mount

drawing number:
CS# 7096.450-GA.U040

replaces the edition:

**A2**

This drawing remains our property and may not be multiplied neither be disclosed to third parties (§§1,3 and 5 from the copyright Act (UrhG)).

covered according to DIN ISO 16016