opk Submarine S (23 mm track)
Mounting Instruction

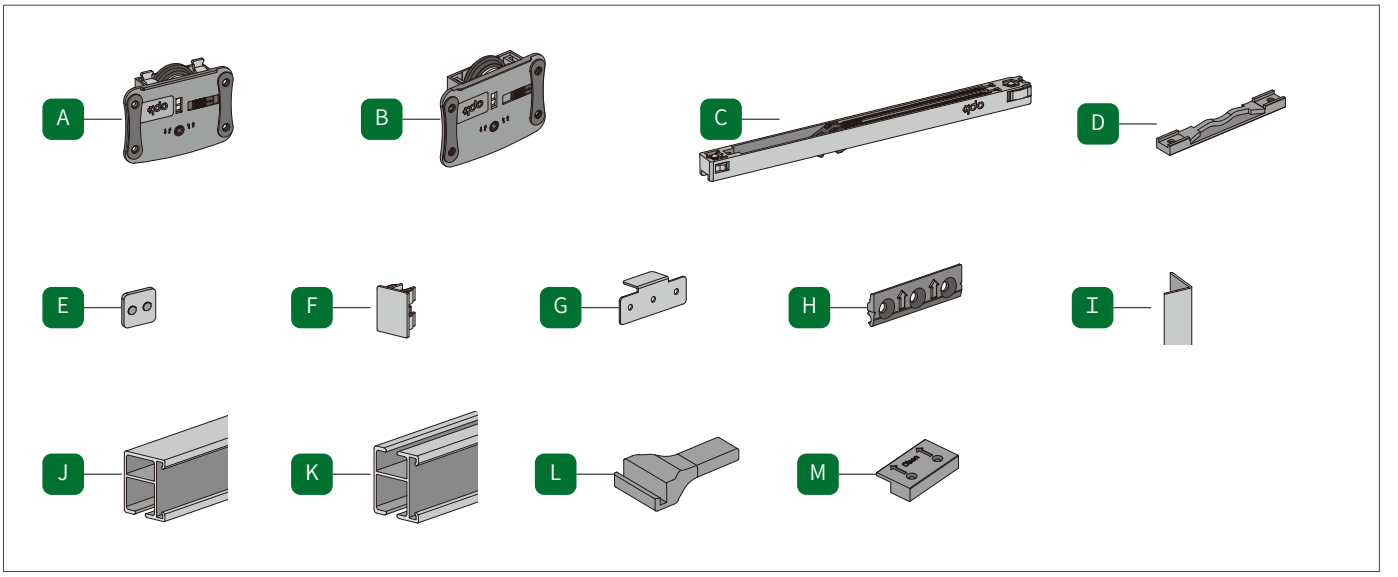

Regalboden 23mm / Cabinet Panel 23mm

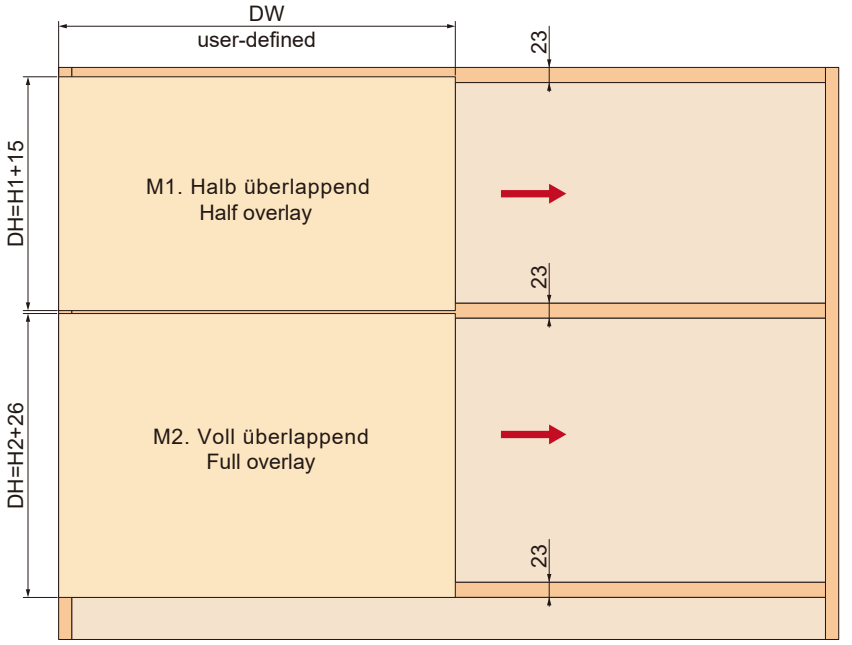

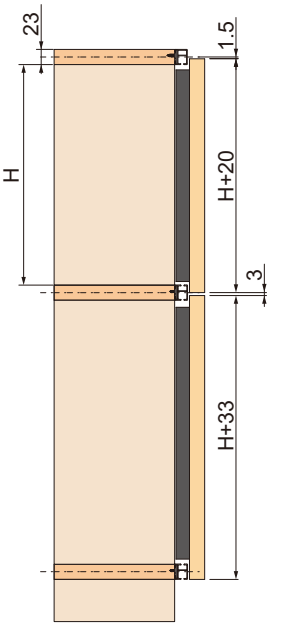

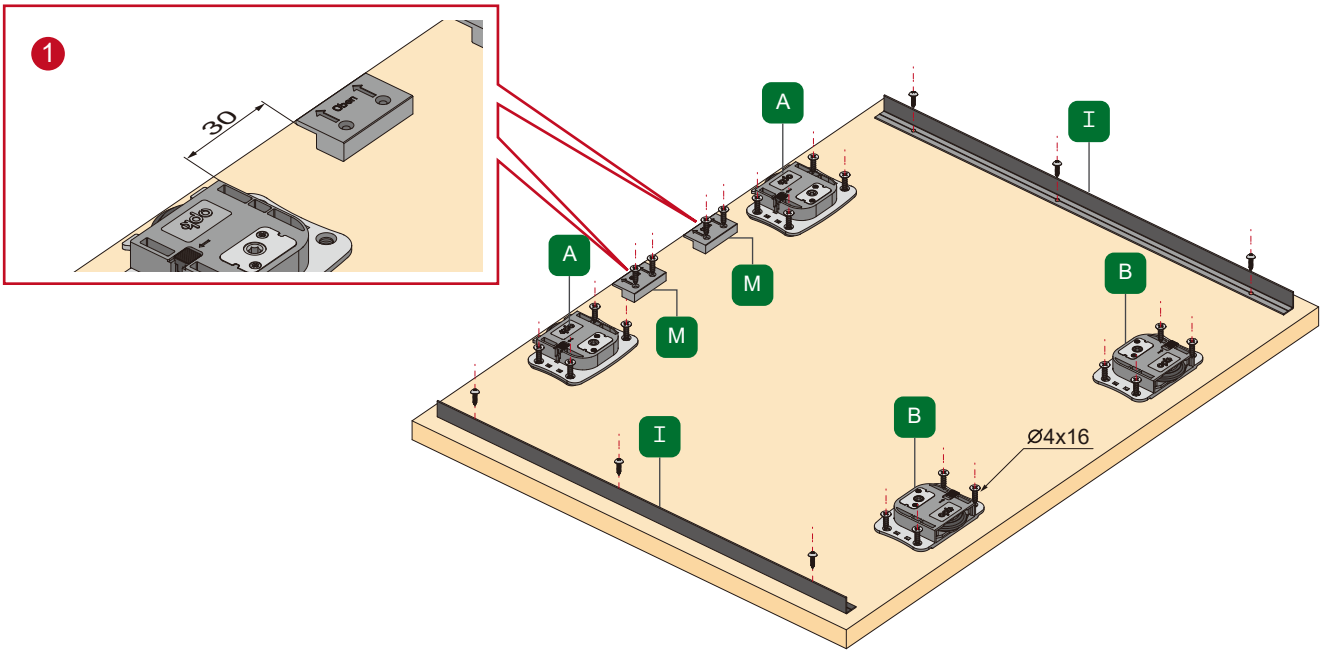

M1. Halb überlappend
Half overlay

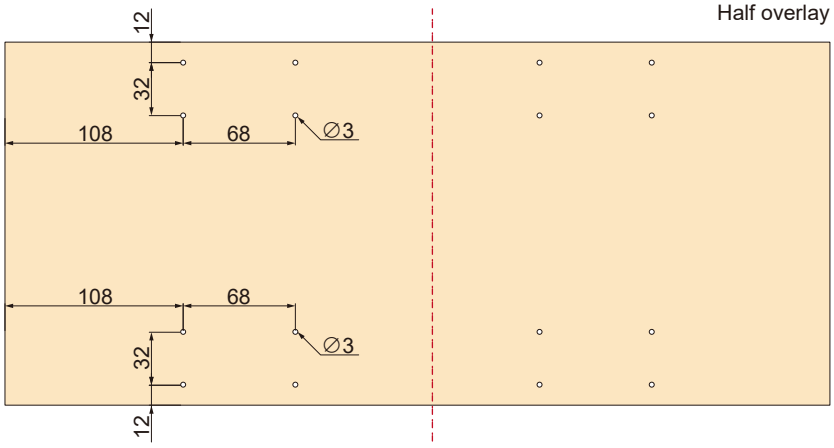

M2. Voll überlappend
Full overlay

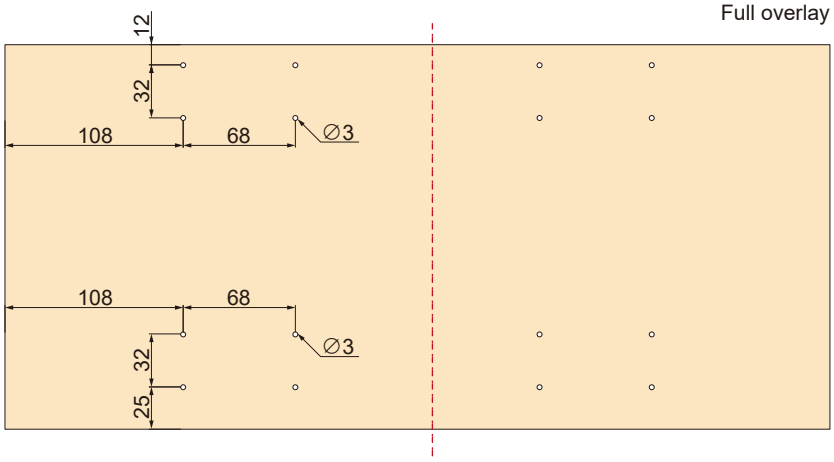

1

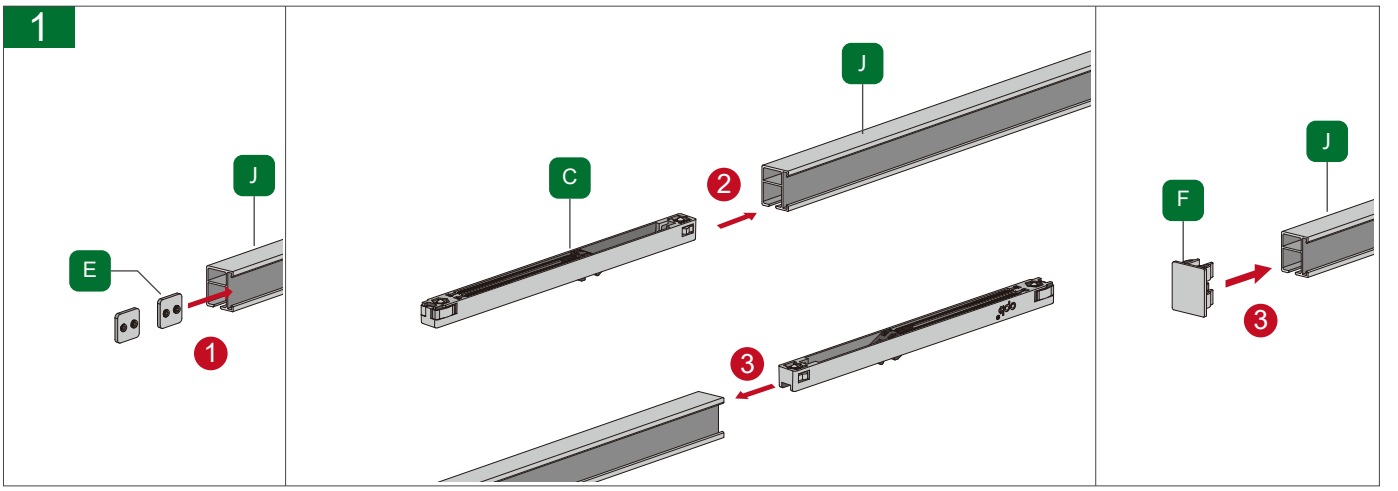
J
E
1
C
J
2
3
F
J
3

2

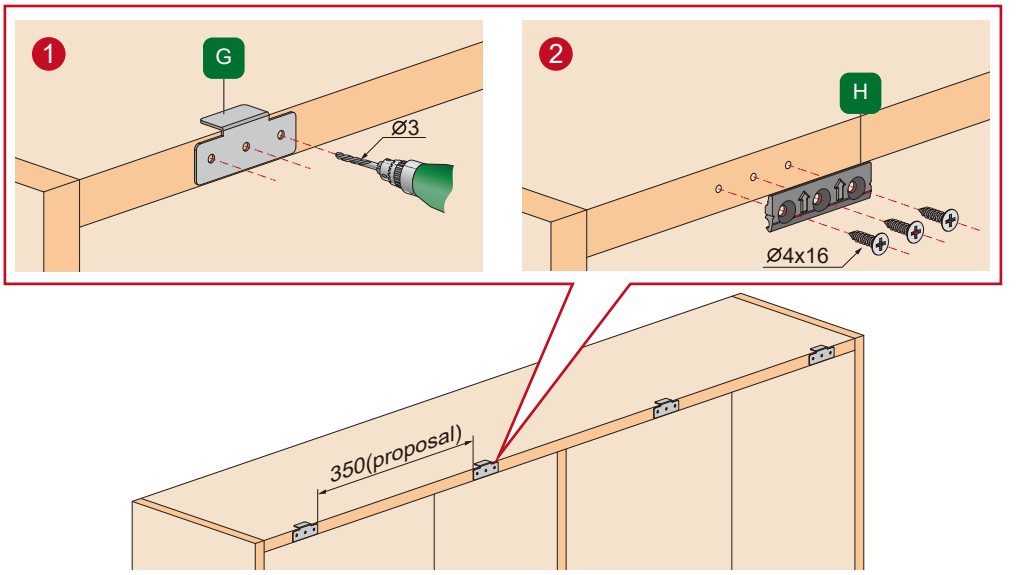
1
G
Ø3
2
H
Ø4x16
350(proposal)

3

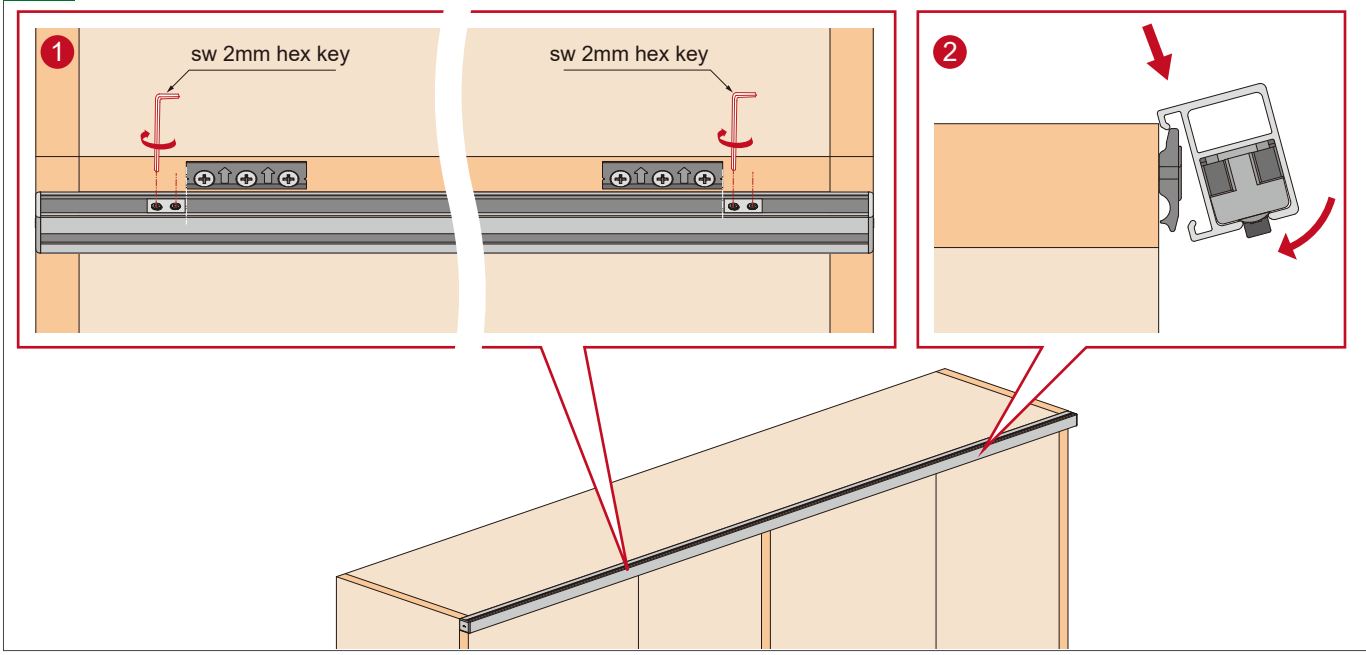
1
sw 2mm hex key
sw 2mm hex key
2

4

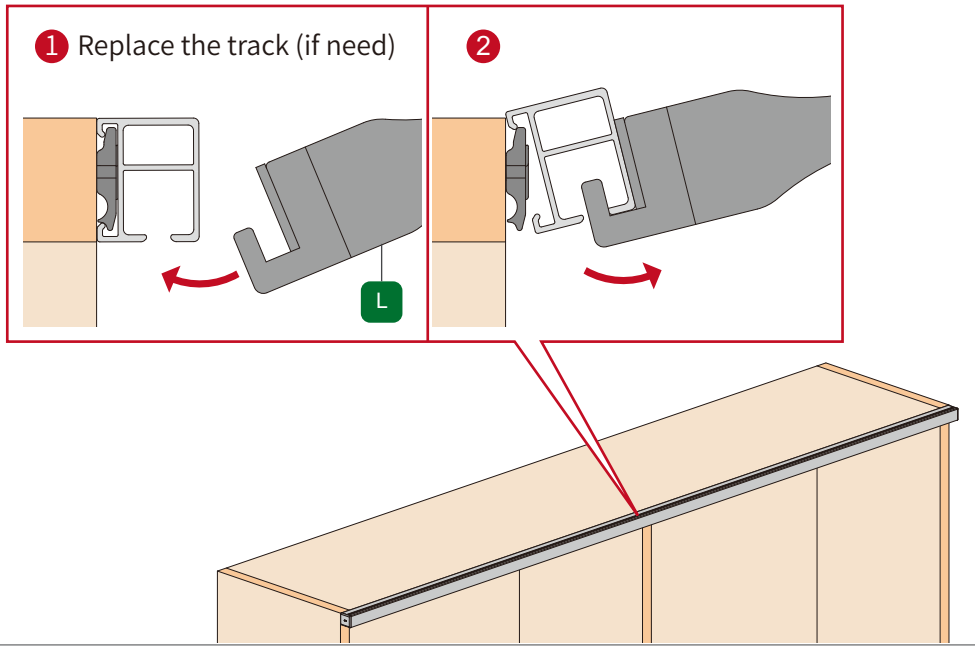

5

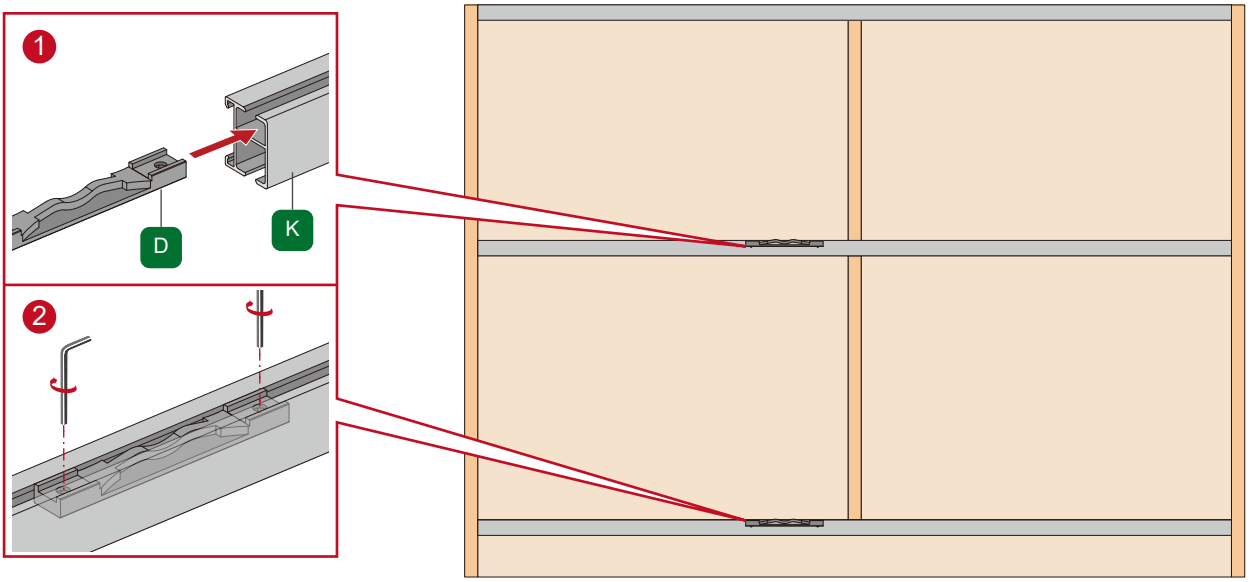

6

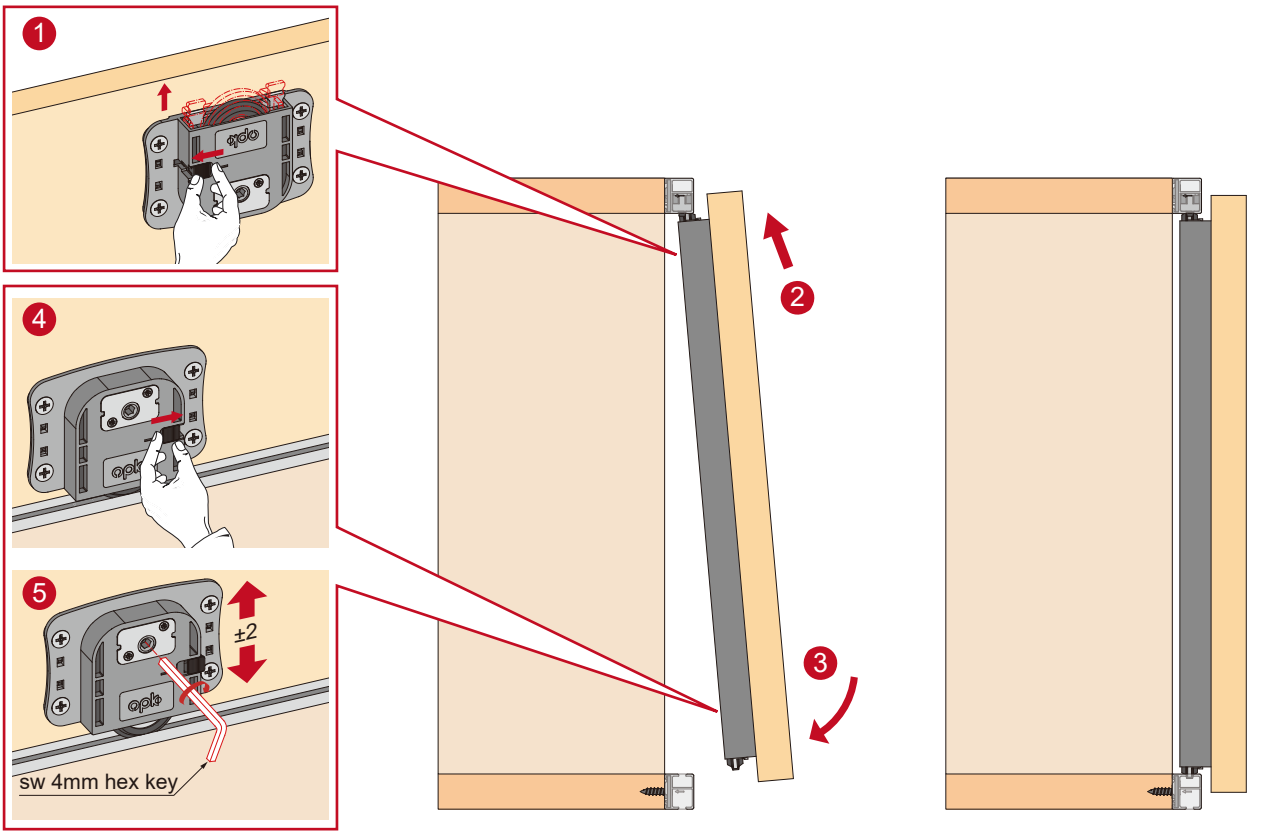

7

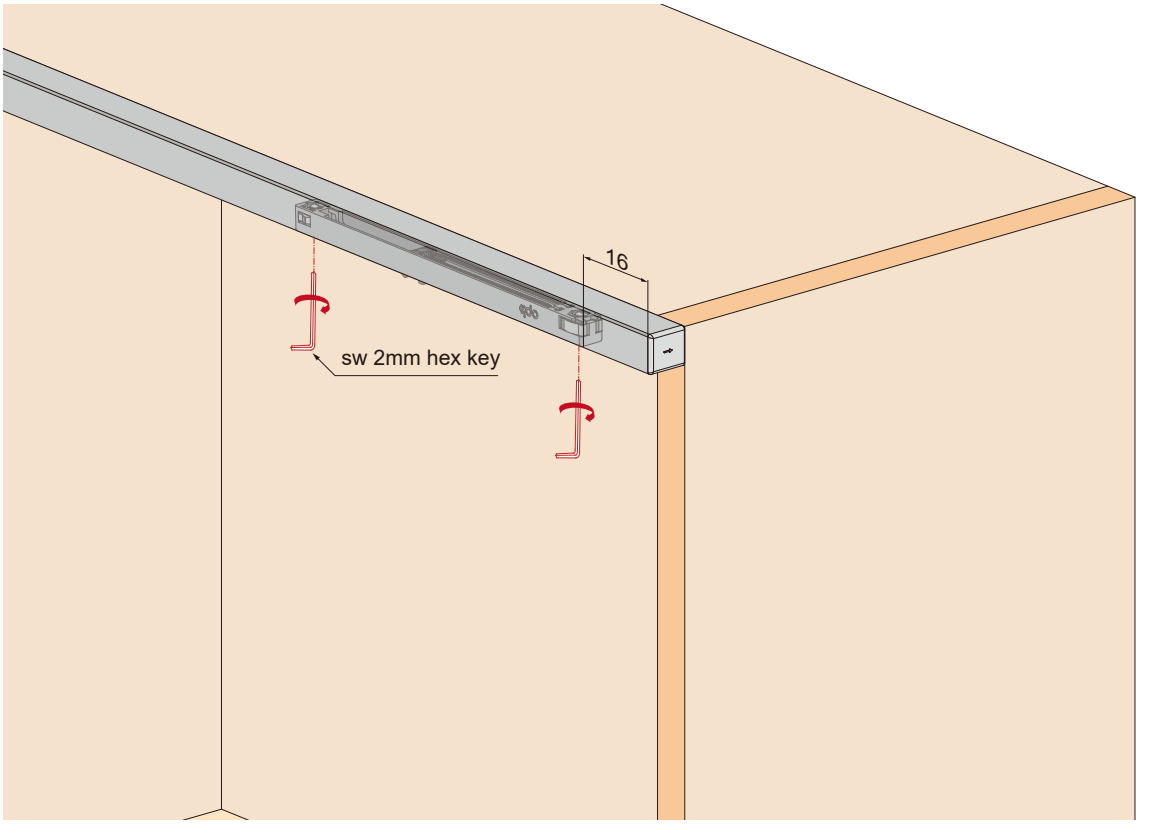

Notice: Since our products will be upgraded from time to time, the product style, color, accessories and related parameters in this document are for reference only. If any change in products, please take real product as criterion. No informing will be made.

SLIDING DOOR & WINDOW SYSTEM EXPERT