# opk Perfect Slim System
# Door Frame Mounting Instruction

## Door Parameters

### Single Door

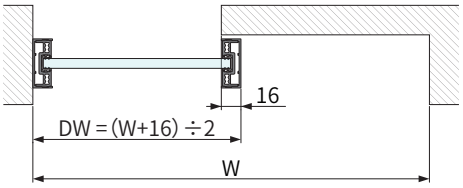


### Stacking 3 Doors

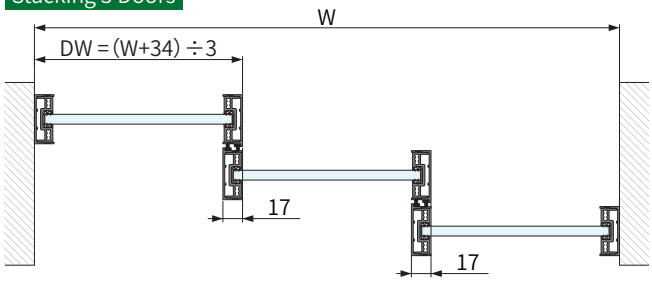


### Wall Mounting

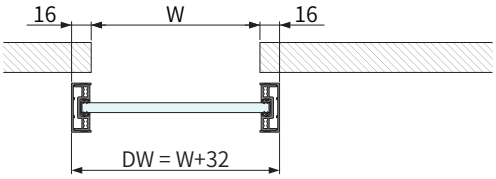


### Mutiple Doors(⩾4 Doors)

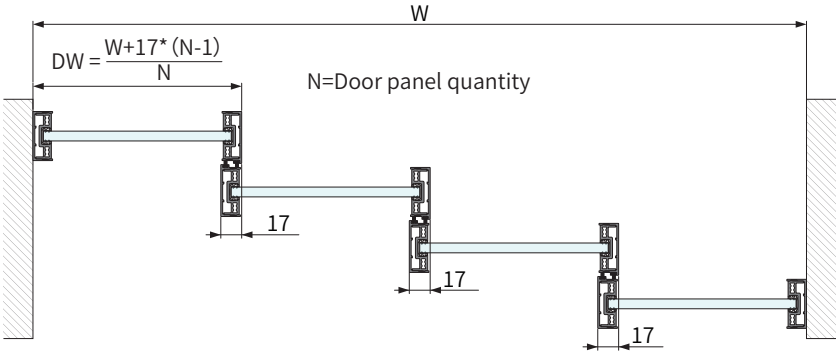


| | |
|---|---|
| Single Door | DH = H-54 |
| Wall Mounting | DH = H-52 |
| Stacking 3 Doors & Mutiple Doors(⩾4 Doors) | DH = H-57 |

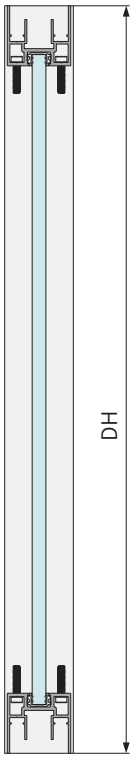


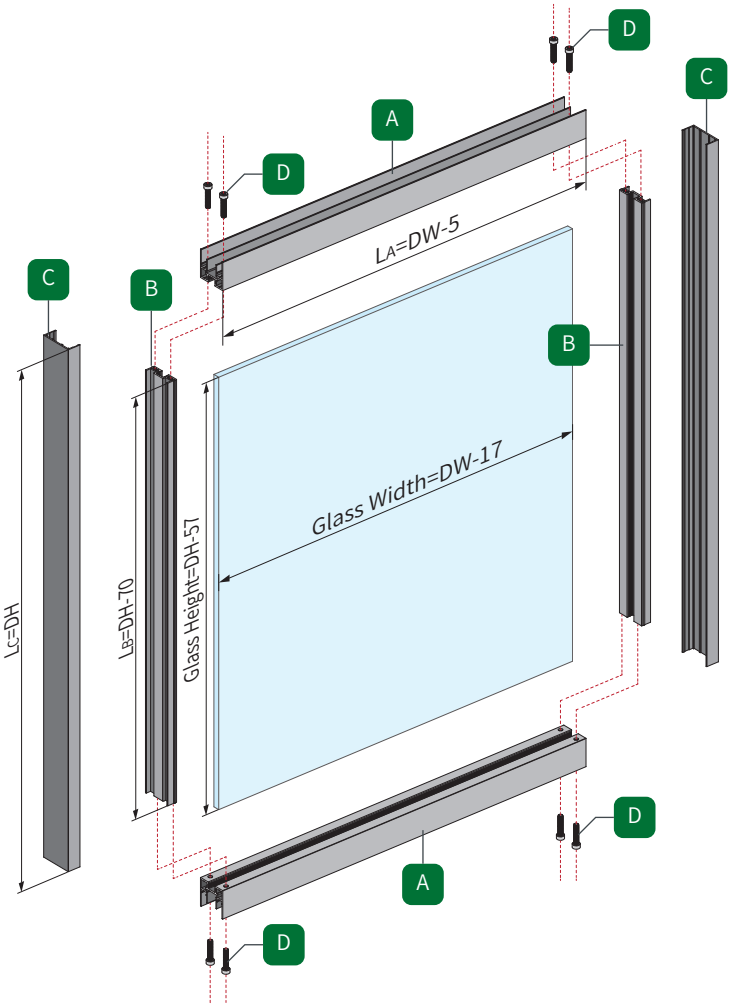


2024.01.24

## 1 Cut Door Frames

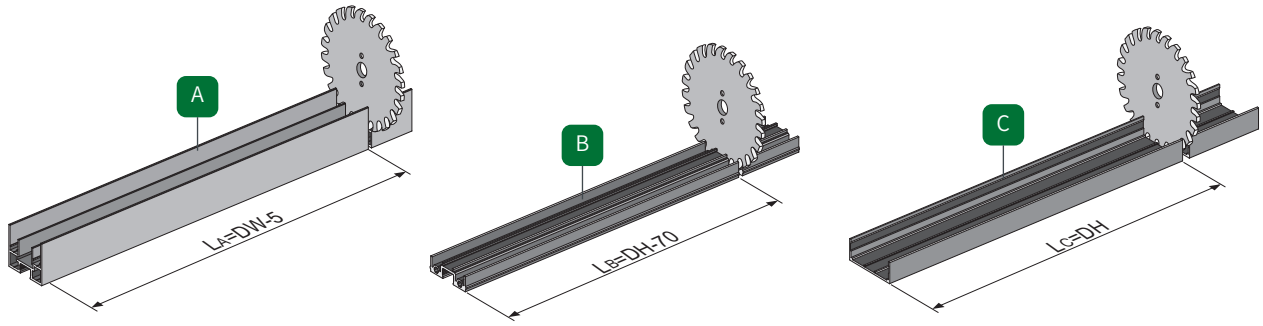


## 2 Drill the Holes on the Top/Bottom Frames

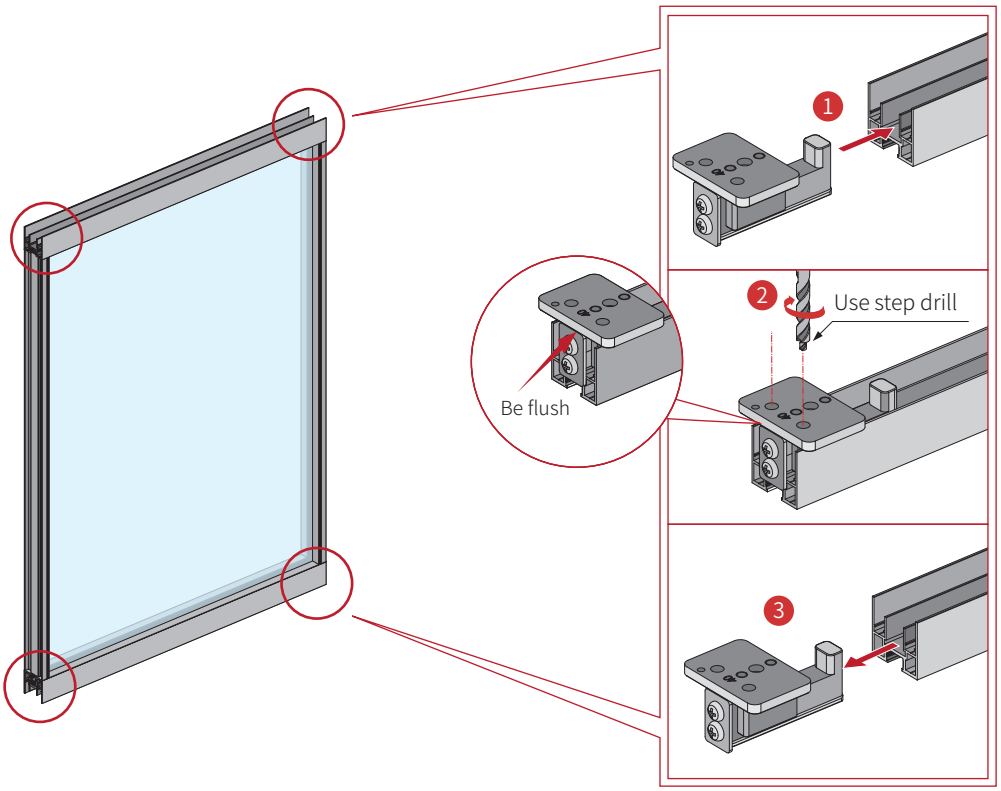


## 3 Add Silicone to the Frames

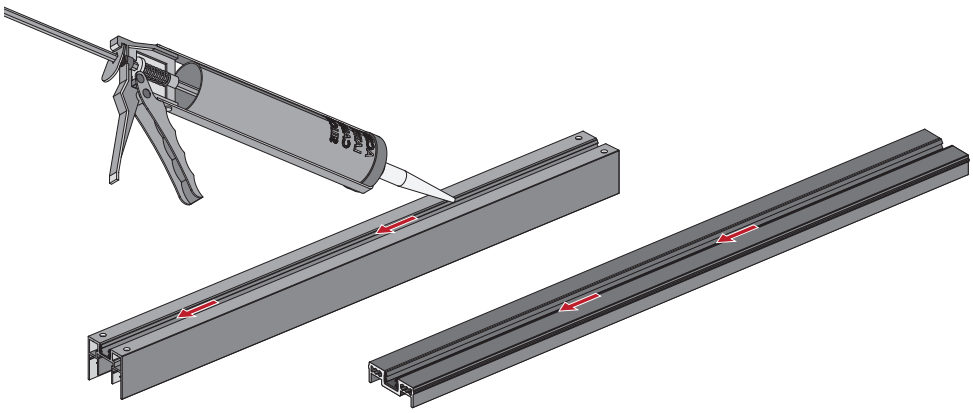

## 4 Install the Door Frames

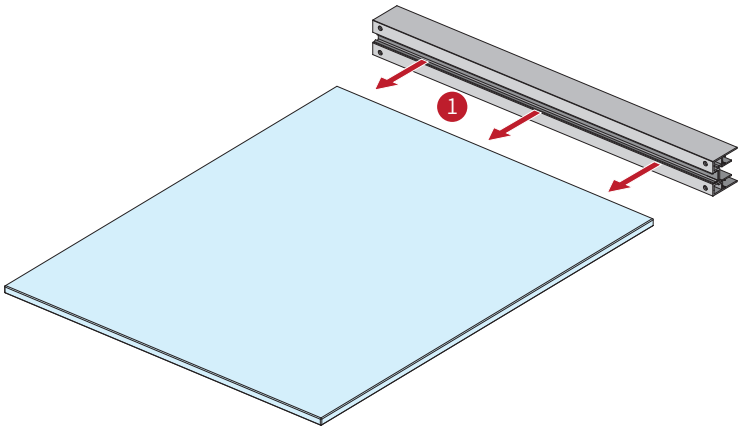


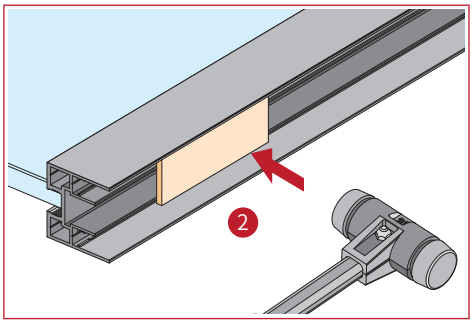


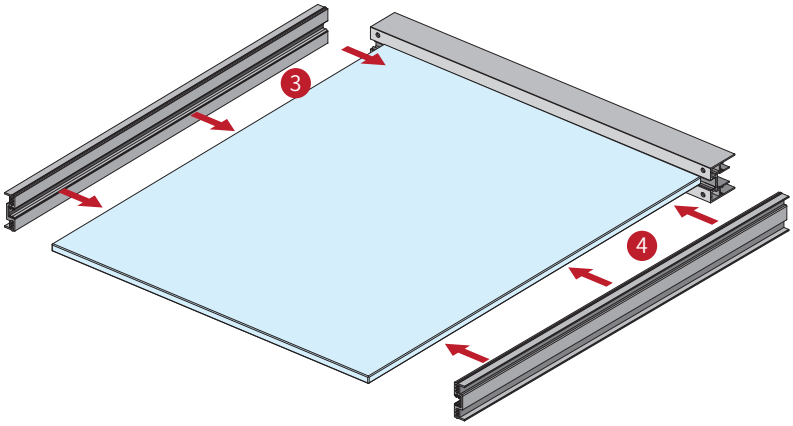


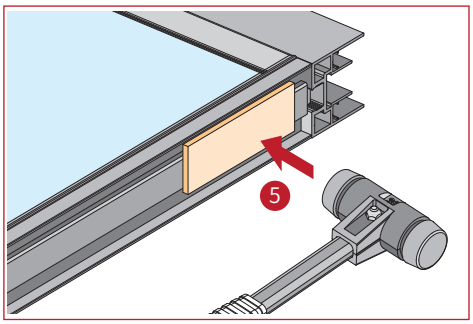


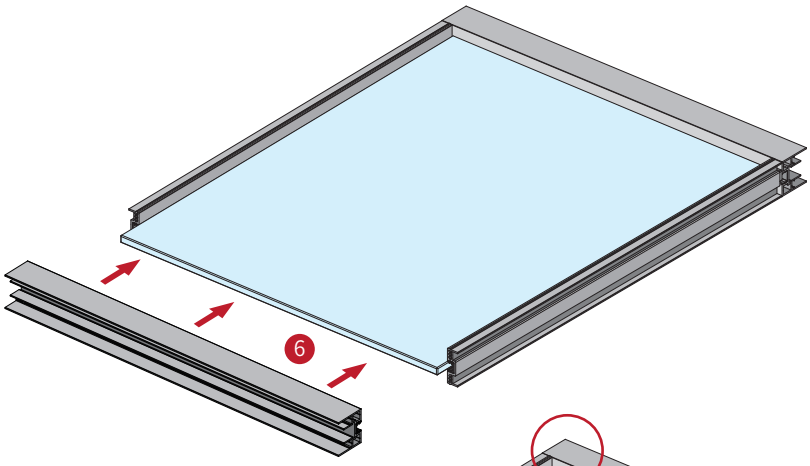


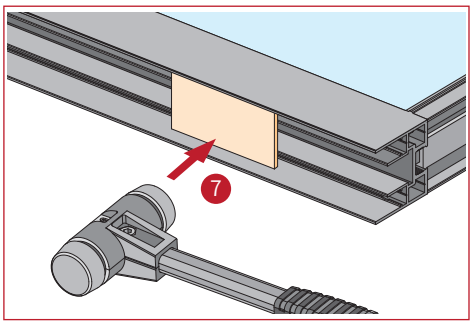


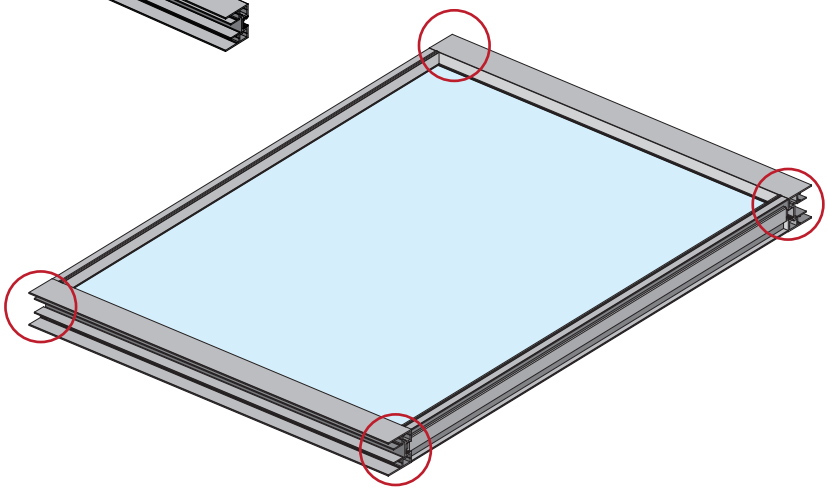

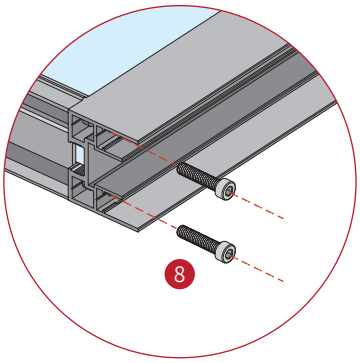

## 5 Measure the Door

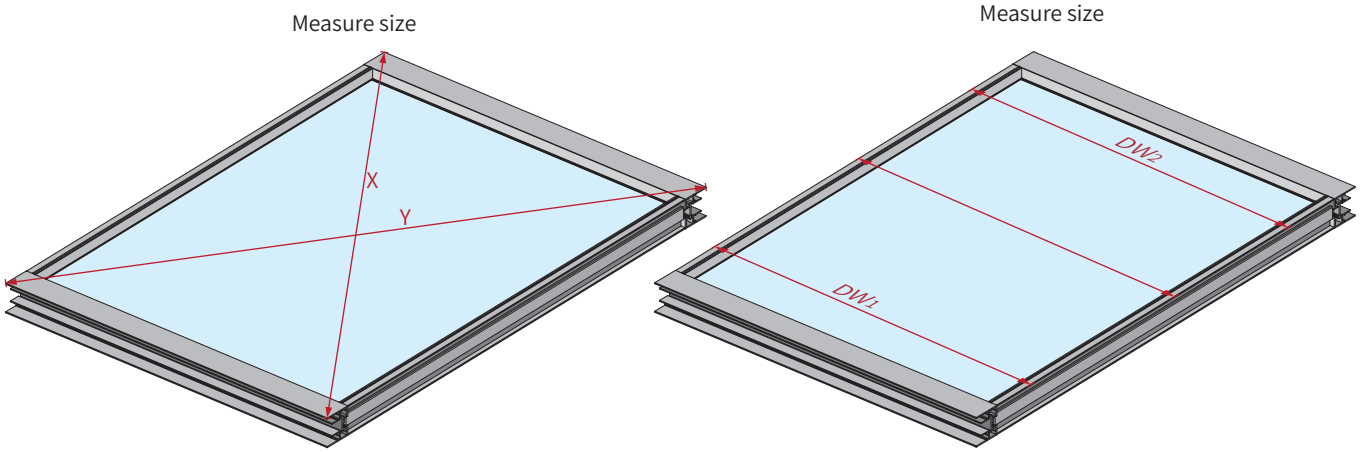


IX-YI≤2

IDW1-DW2I≤1

## 6 Install the Corner Protector

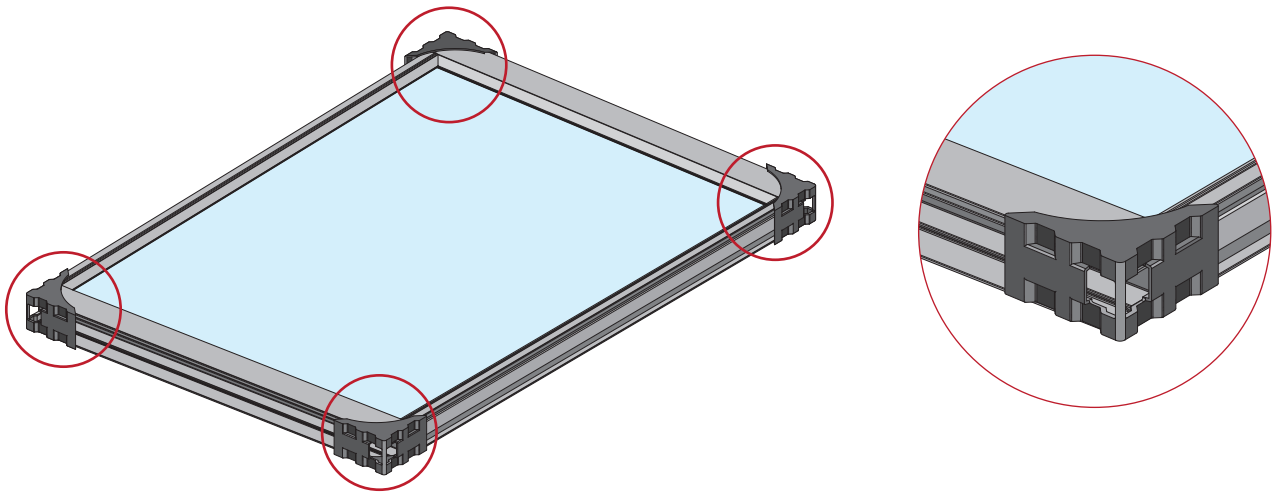
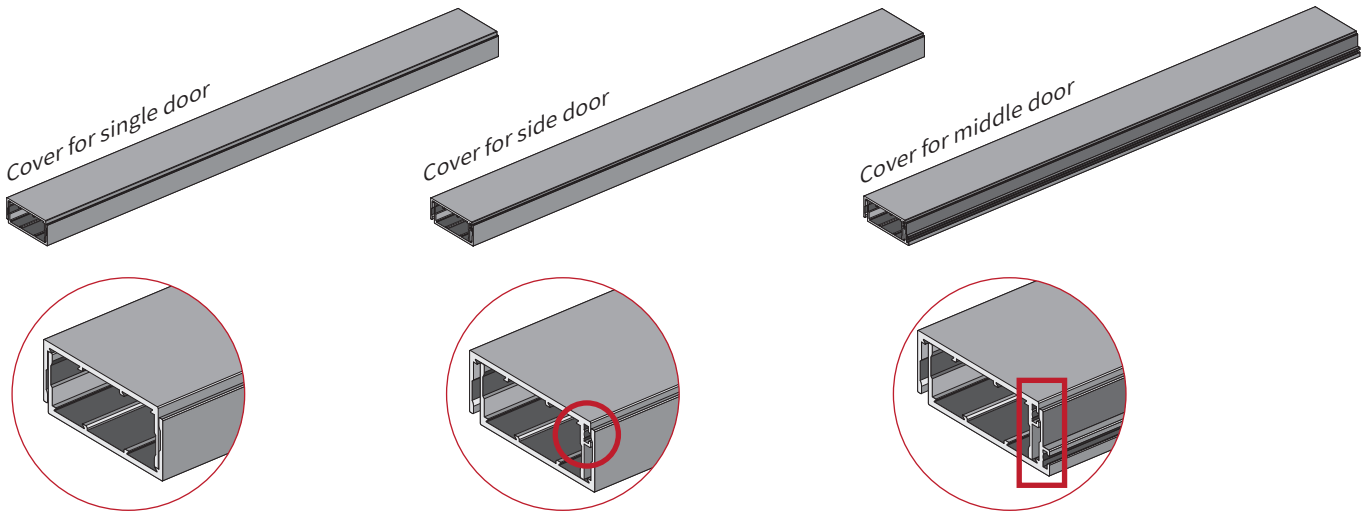
## 7 Covers for Vertical Frame