# opk Sailing 4 wood 15kg Mounting Instruction

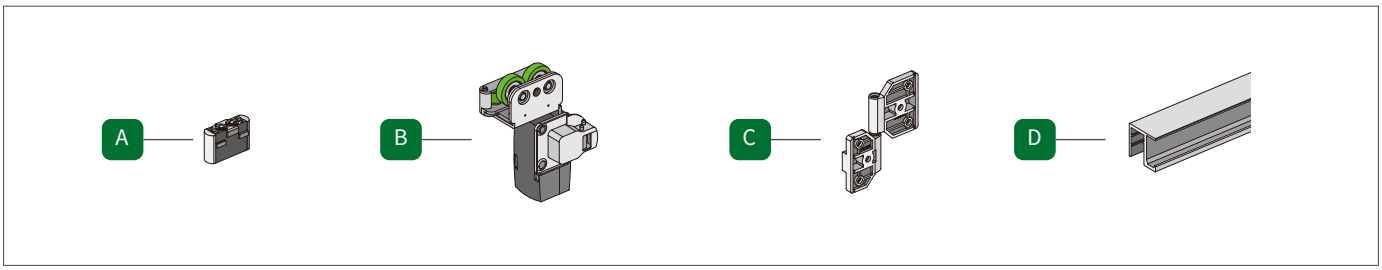


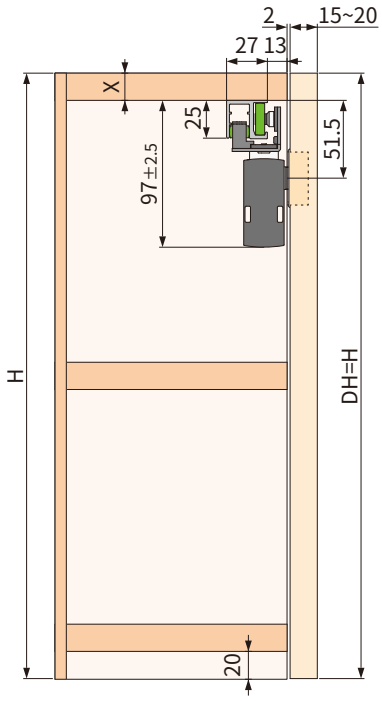


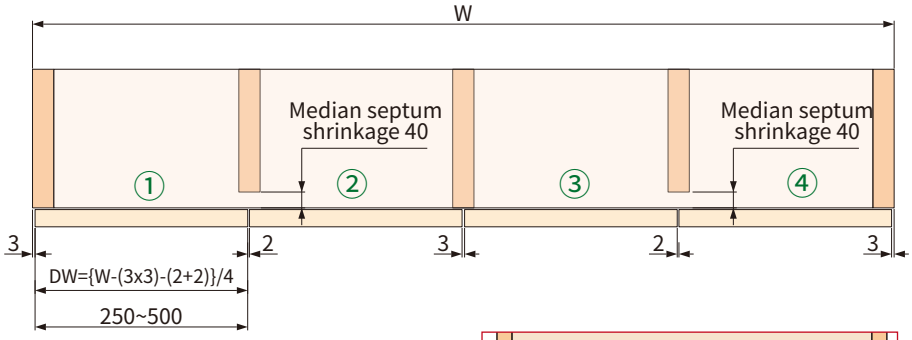


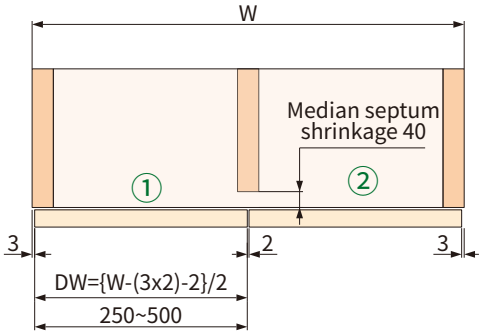


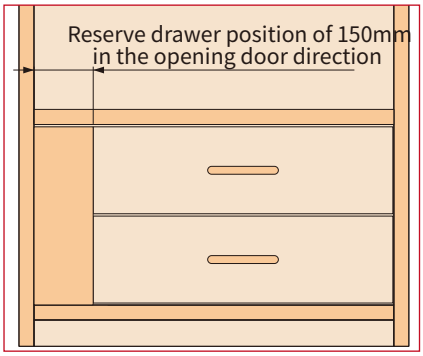


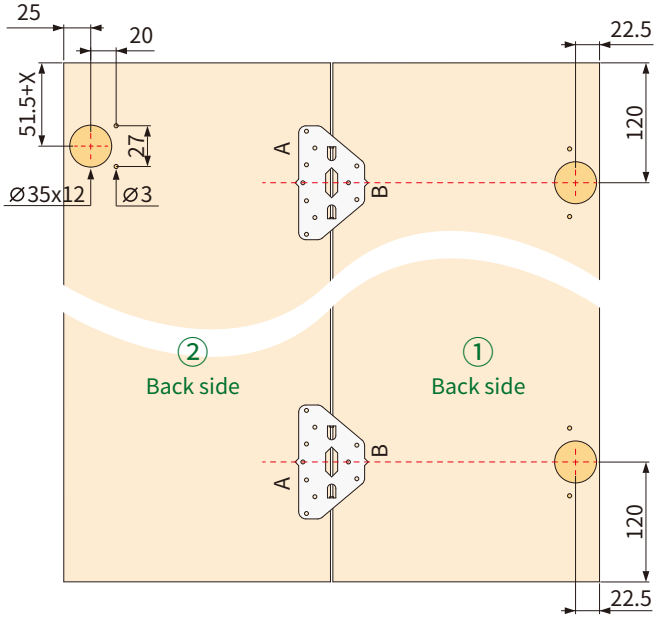


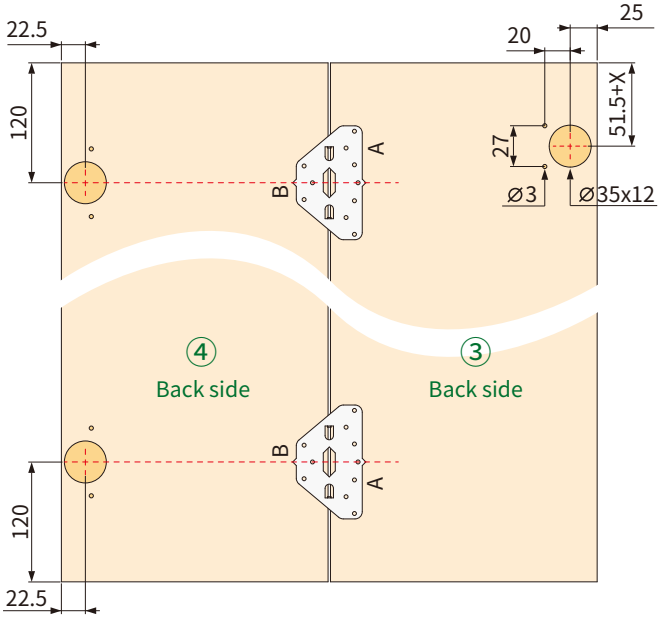

## 1 Install the track fittings

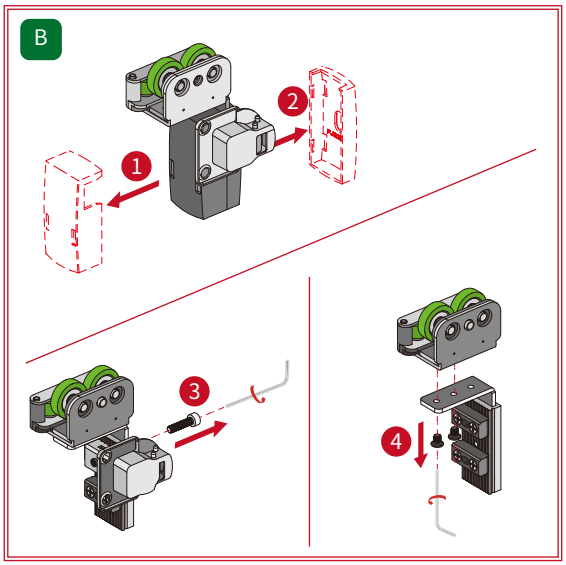


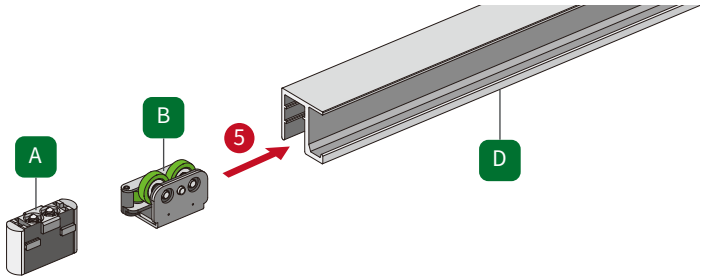


6 Push the stopper to the edge of track

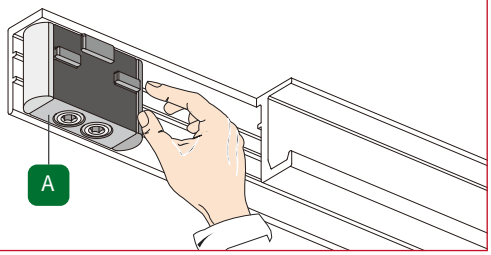


## 2 Install track

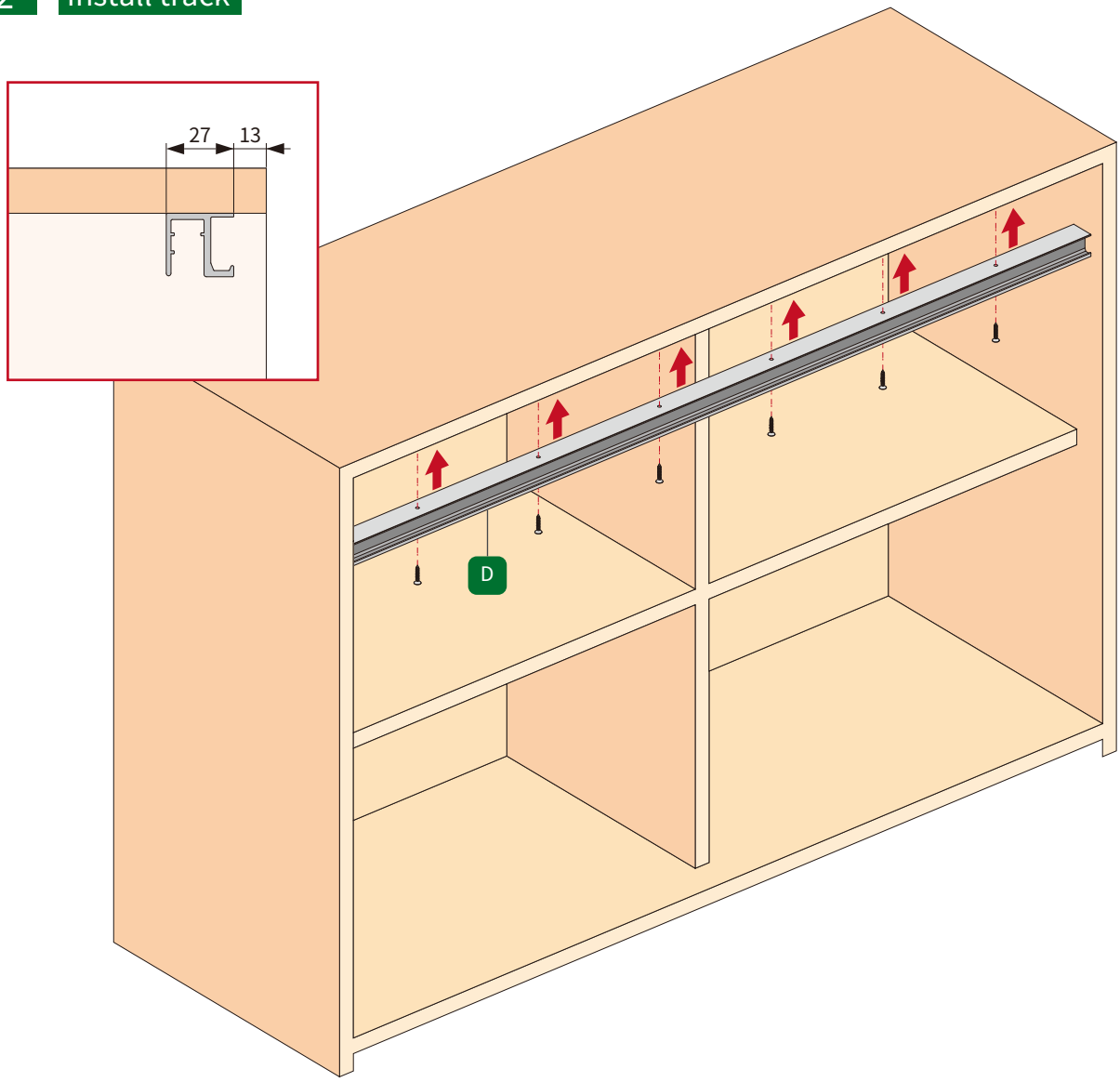

## 3 Install door panel fittings

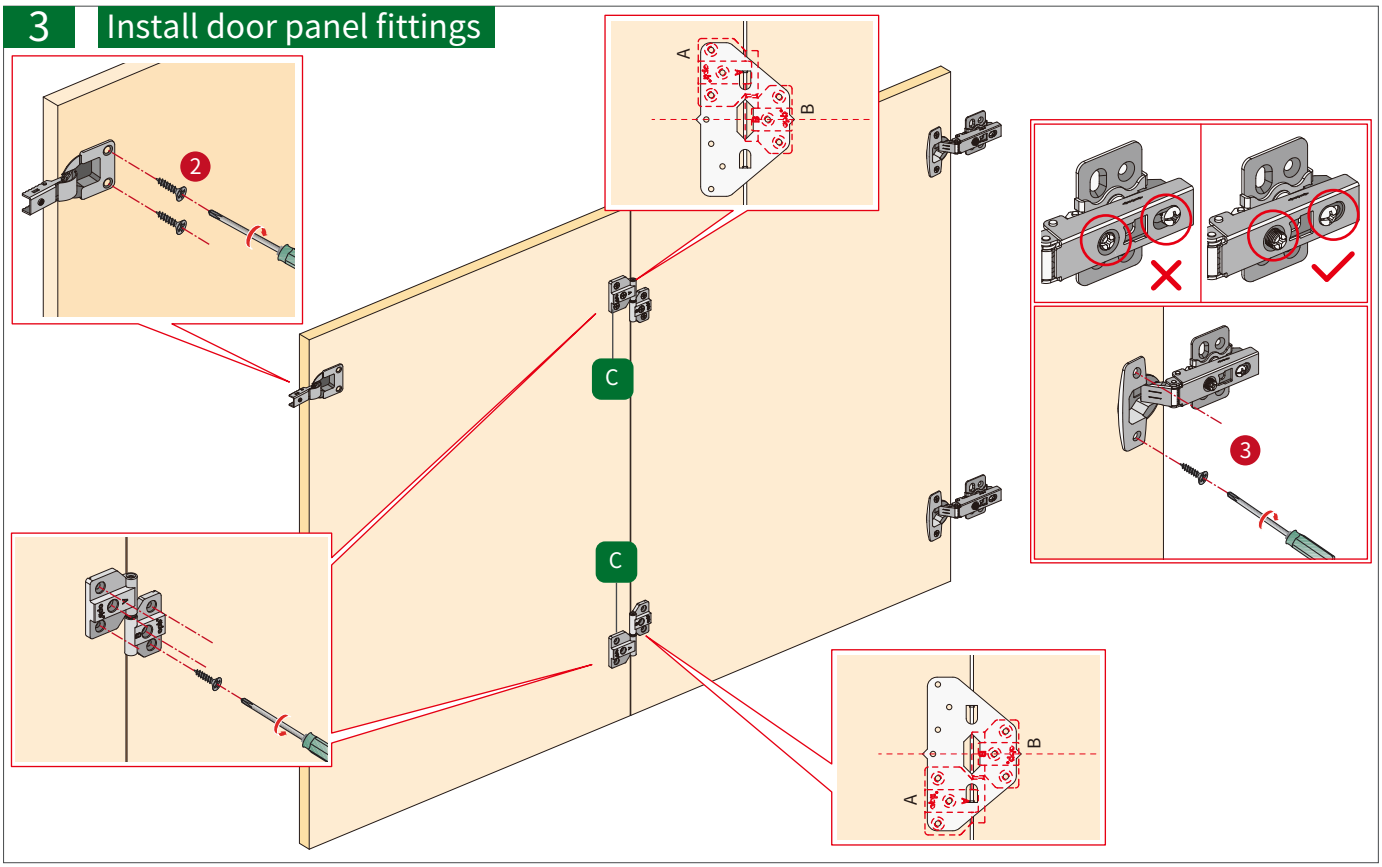


## 4-1 Install door panel

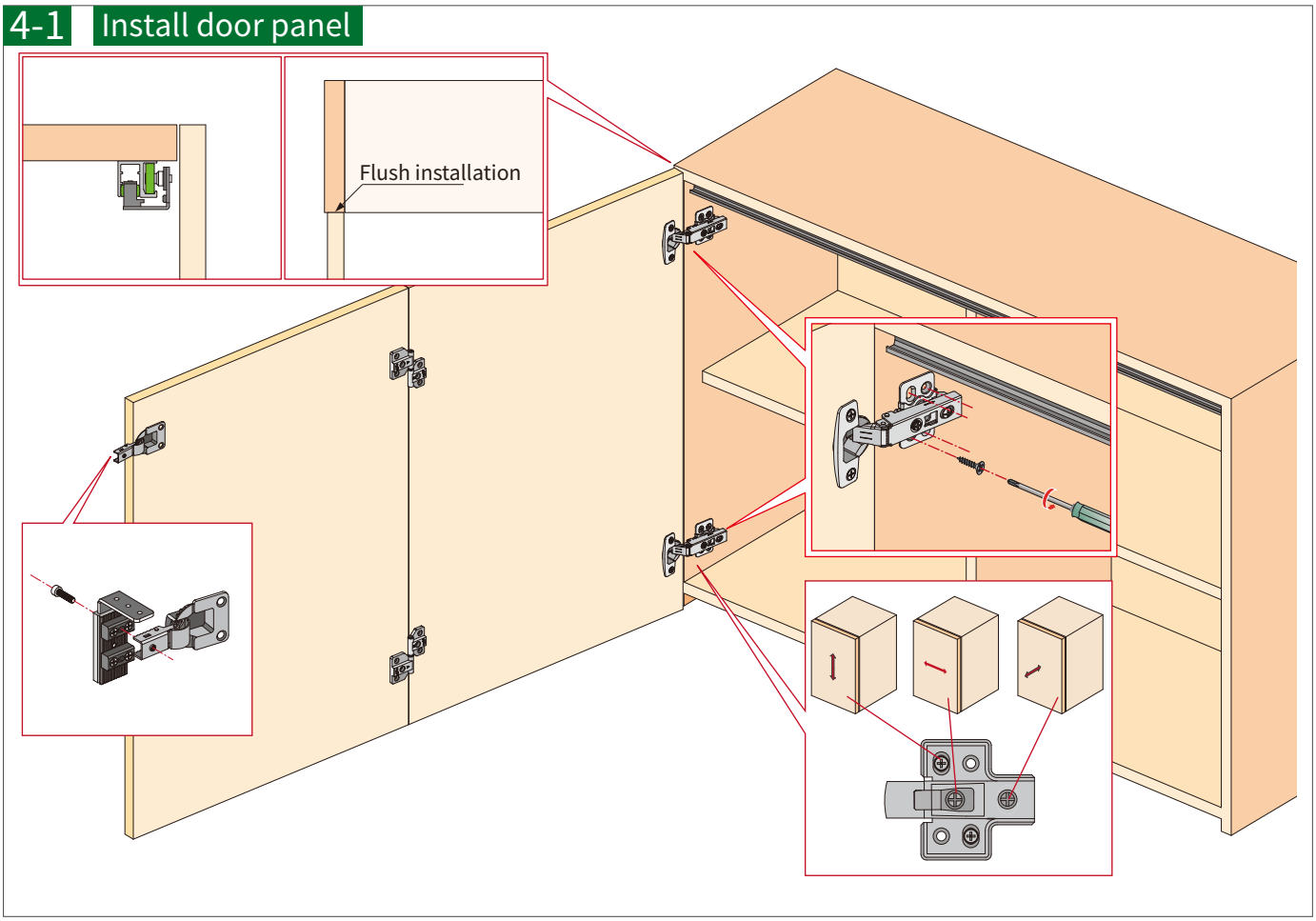

## 4-2 Install door panel

### Adjust the balance of the door panel

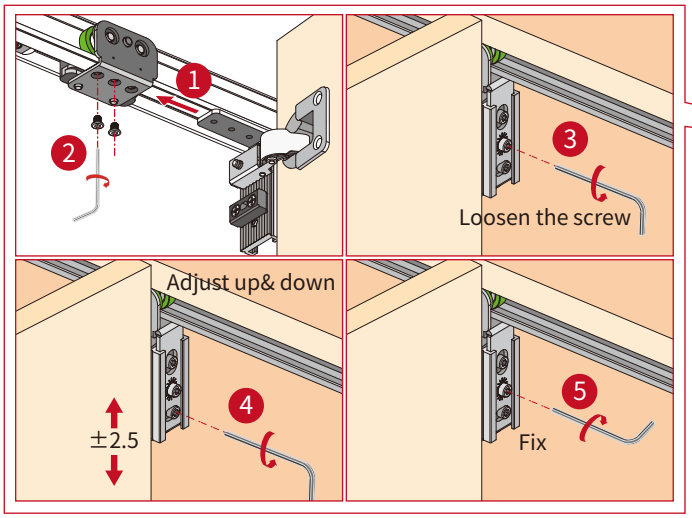


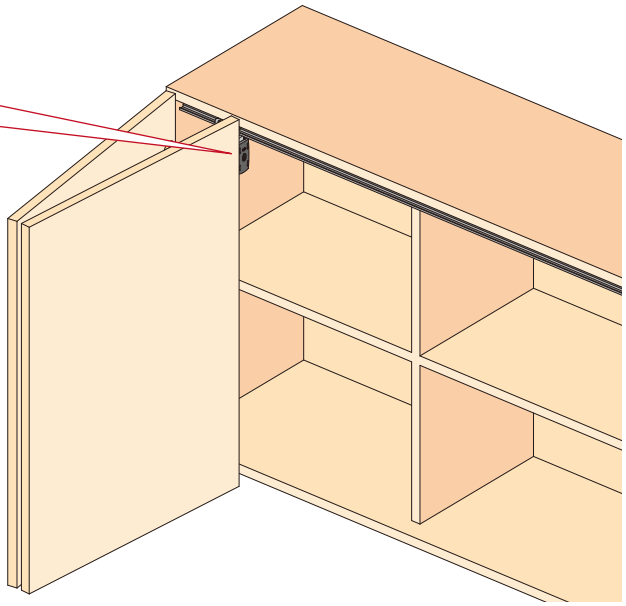

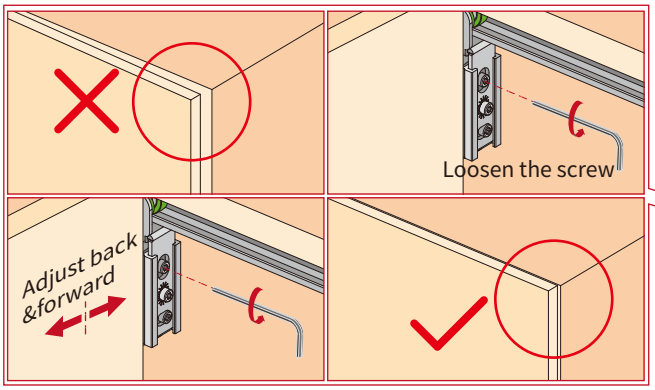


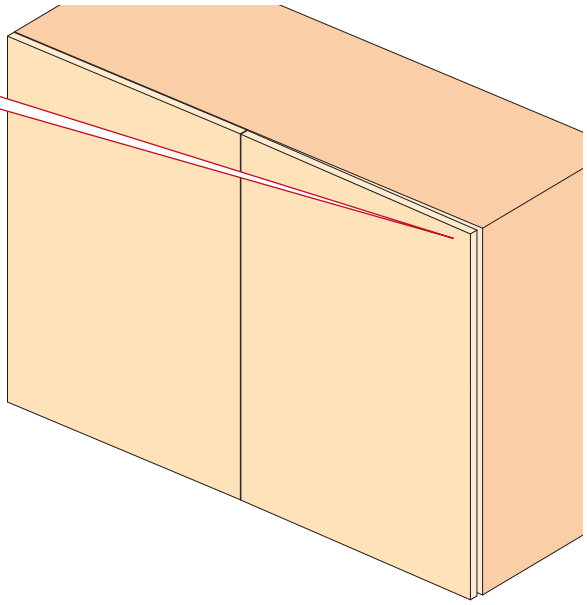

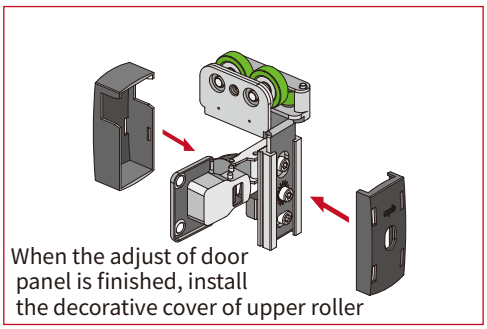

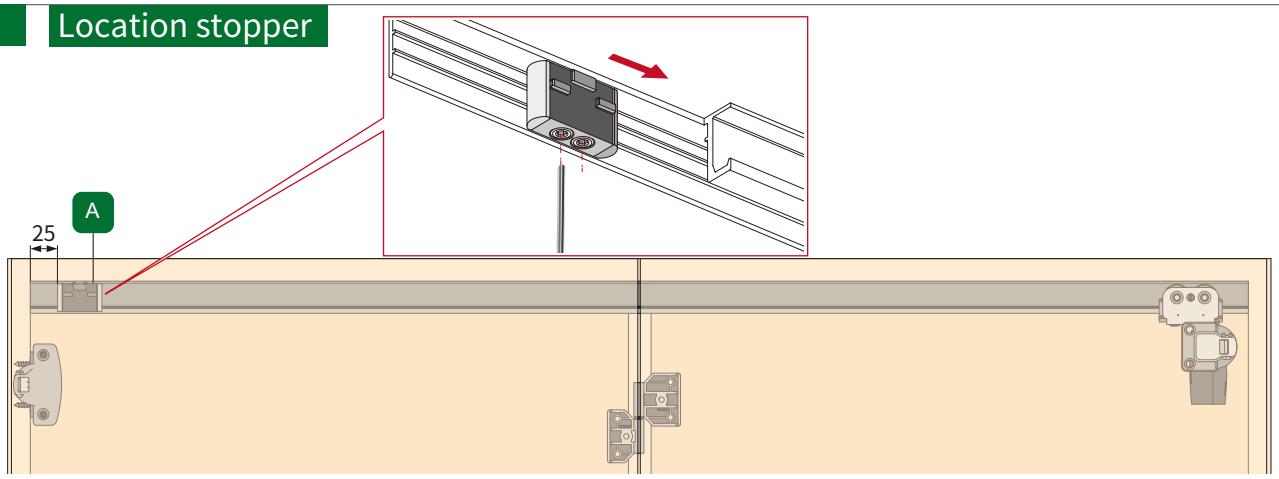
## 5 Location stopper