opk Miniroller Mounting Instruction
Door without vertical frame

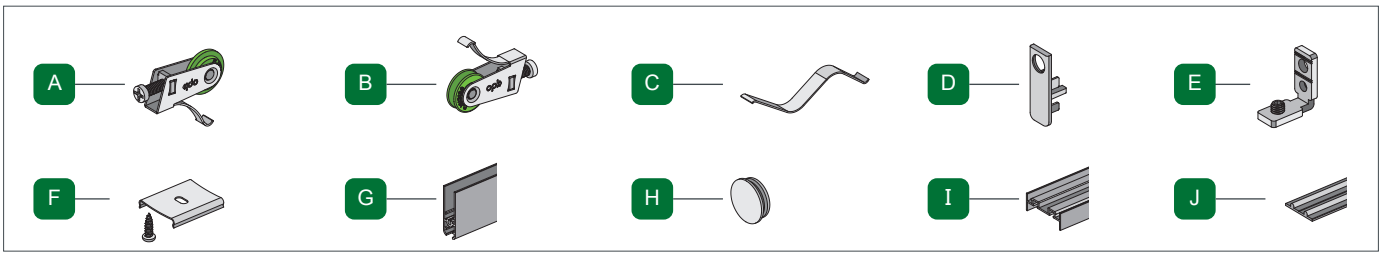

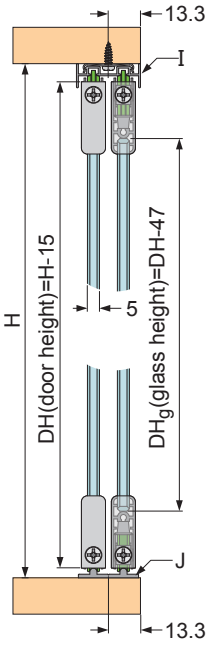

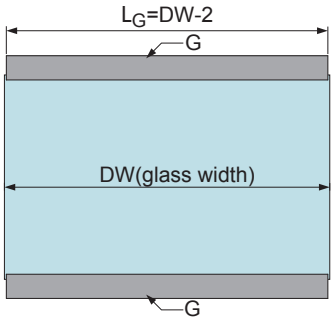

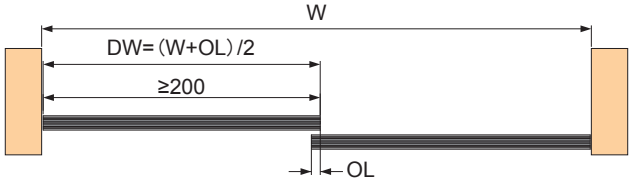

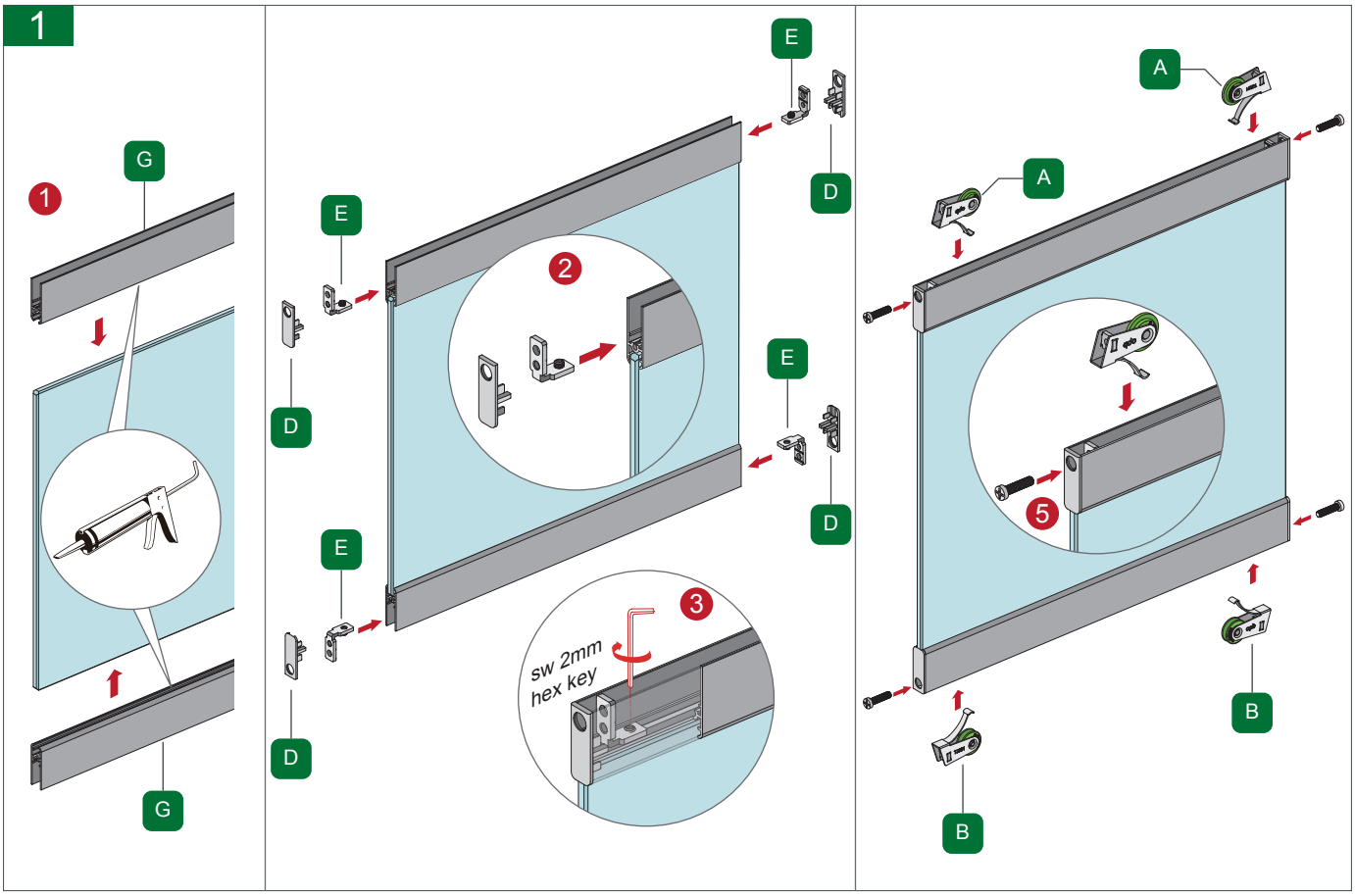

2

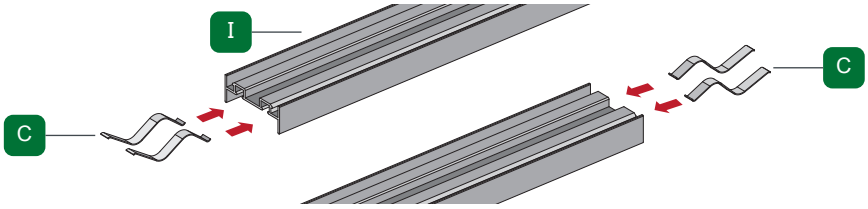

3

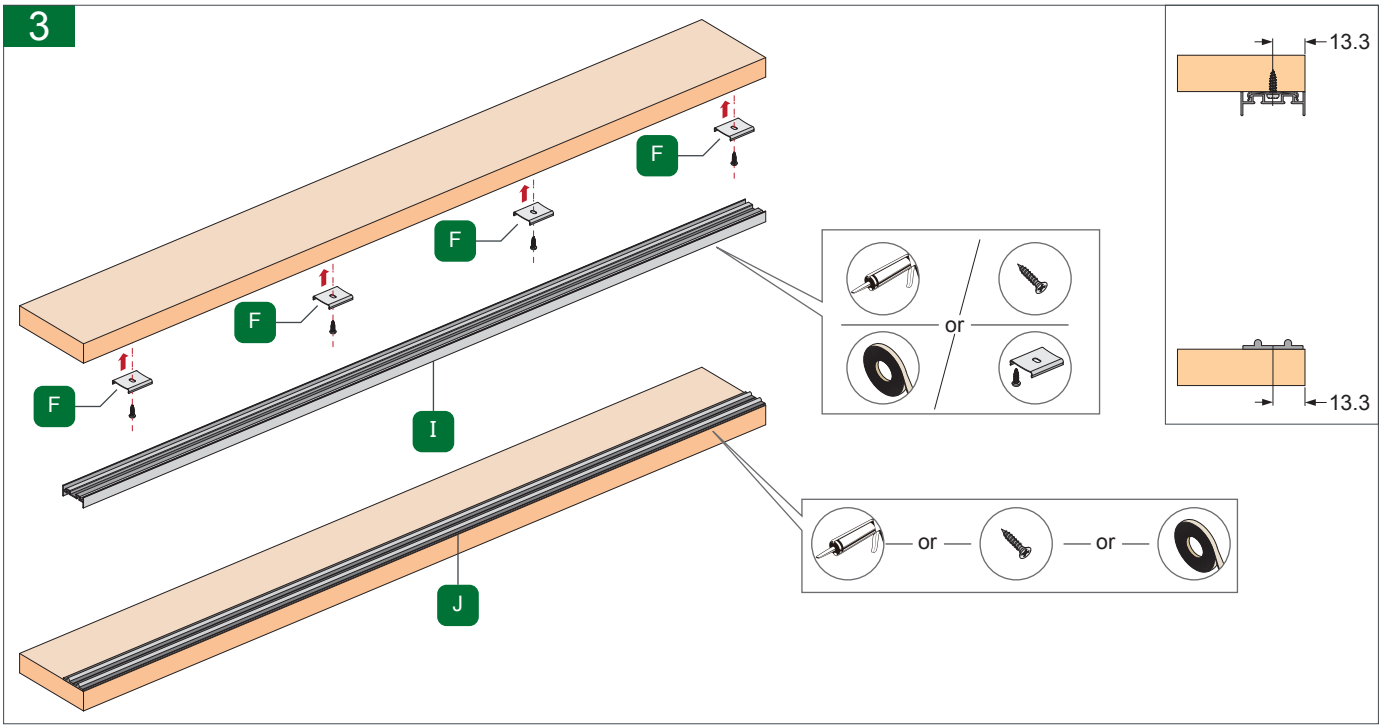

4

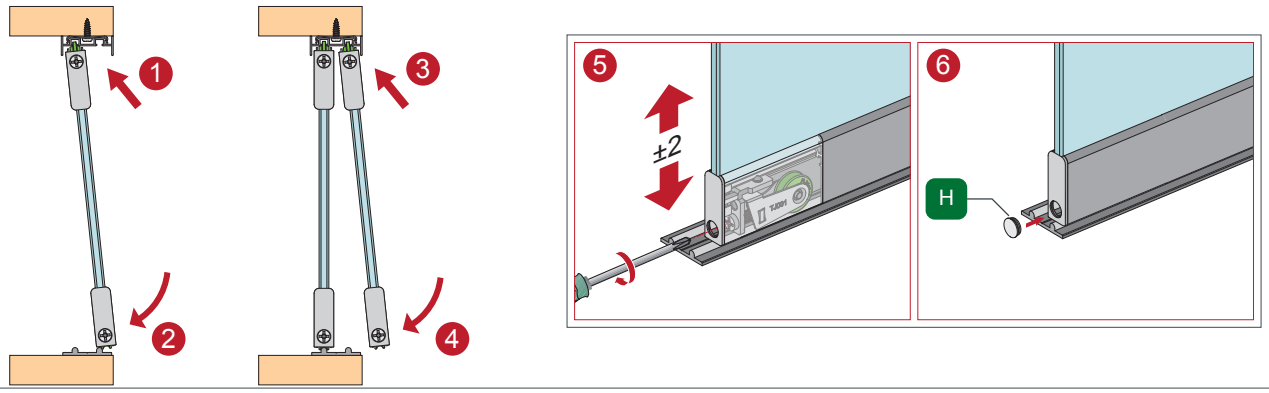
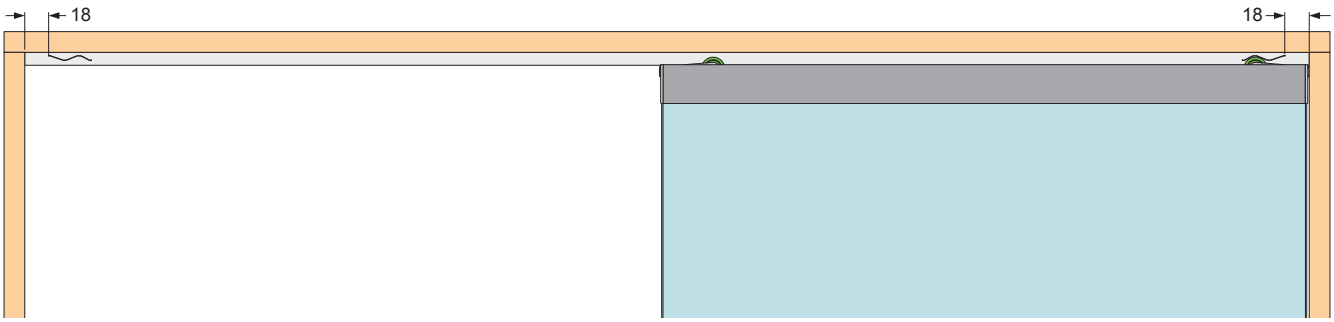
5