opk Perfect Slim System
Single Door Ceiling/Wall Mounting Instruction

Ceiling Mounting

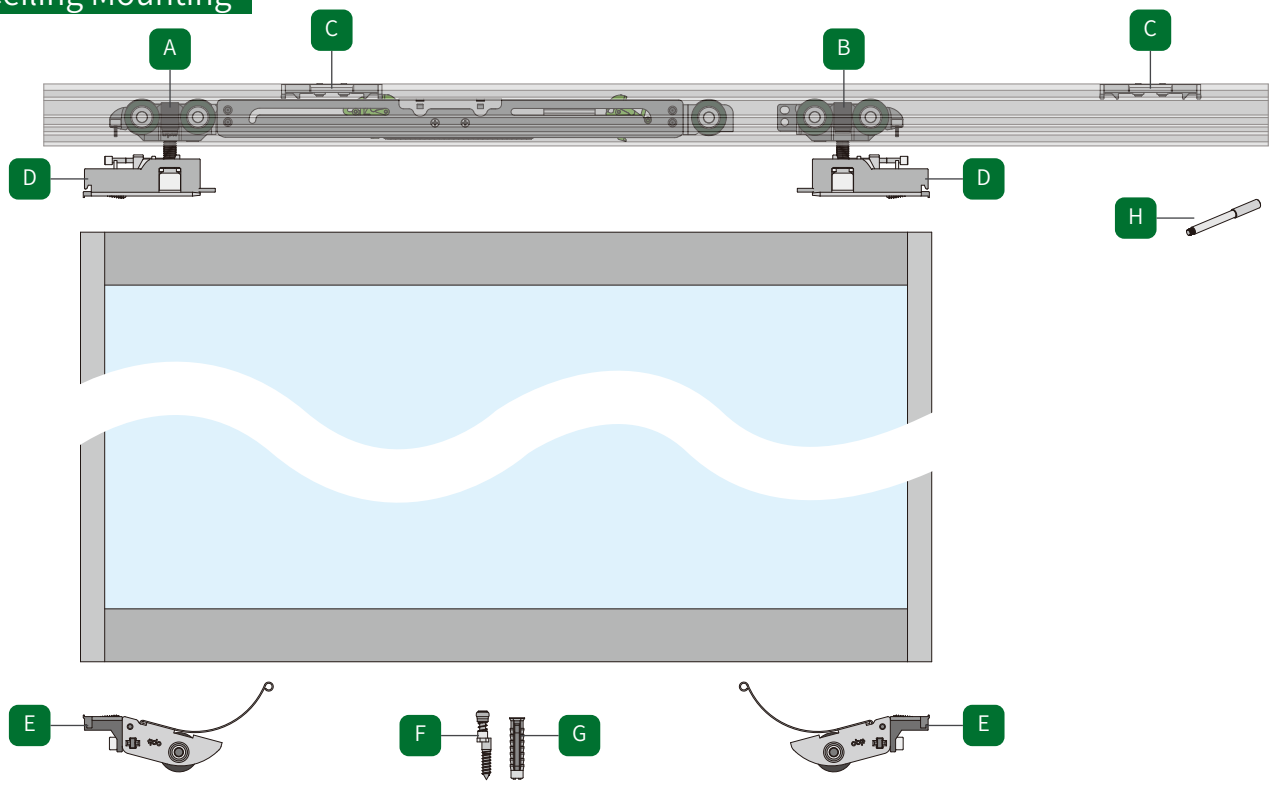

Wall Mounting

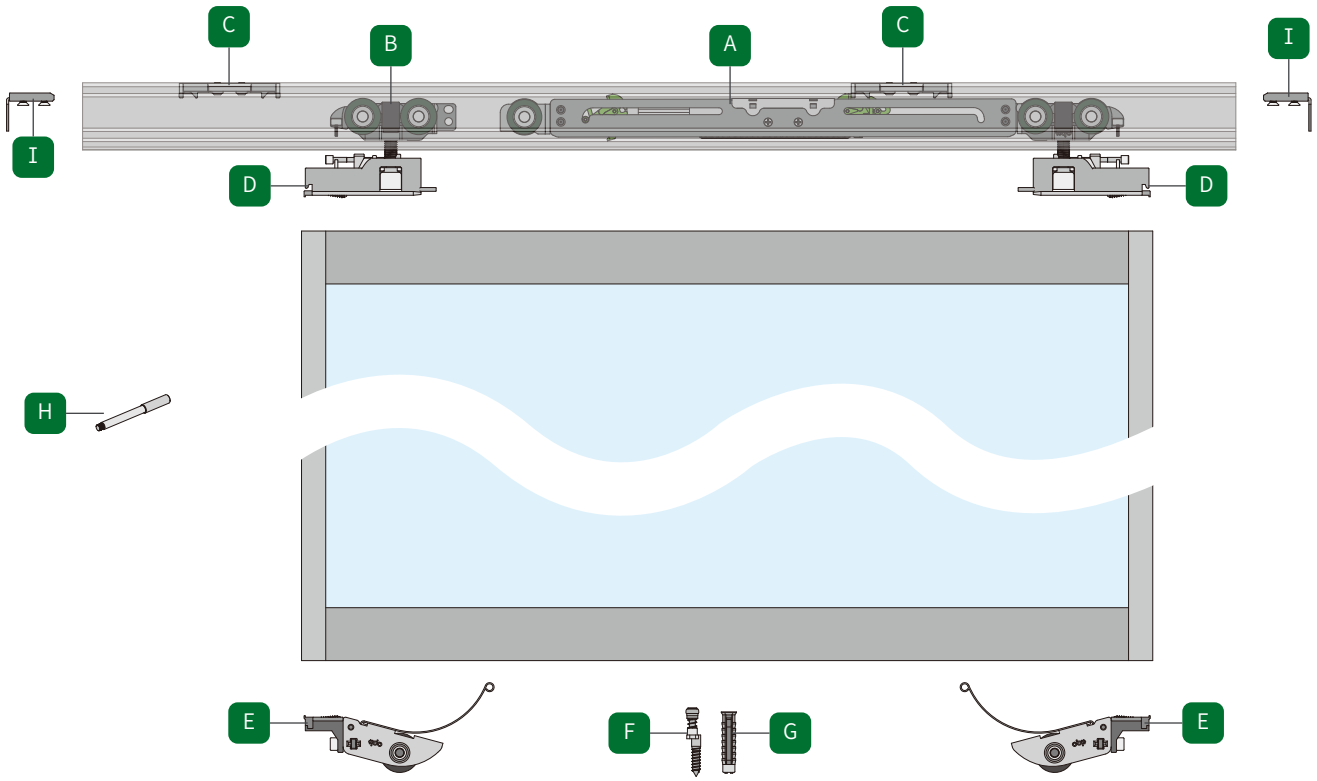

2023.09.12

Ceiling Mounting

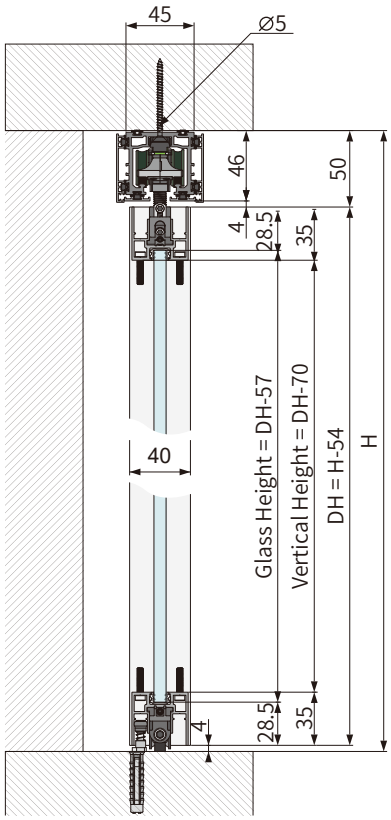

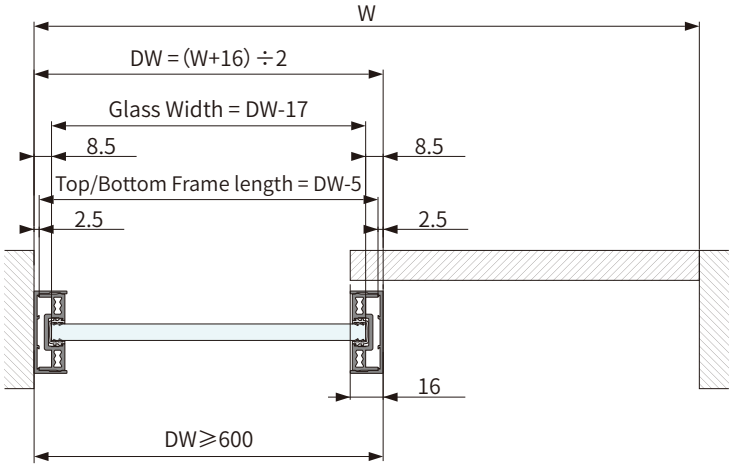

Wall Mounting

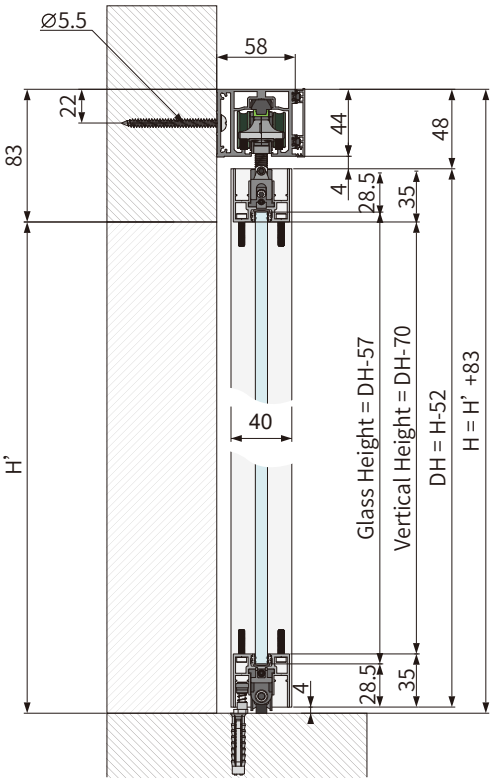

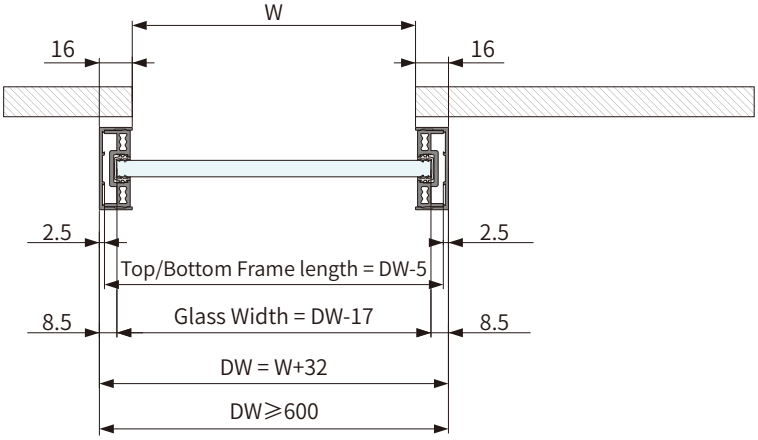

1 Cut the Profiles

Ceiling Mounting

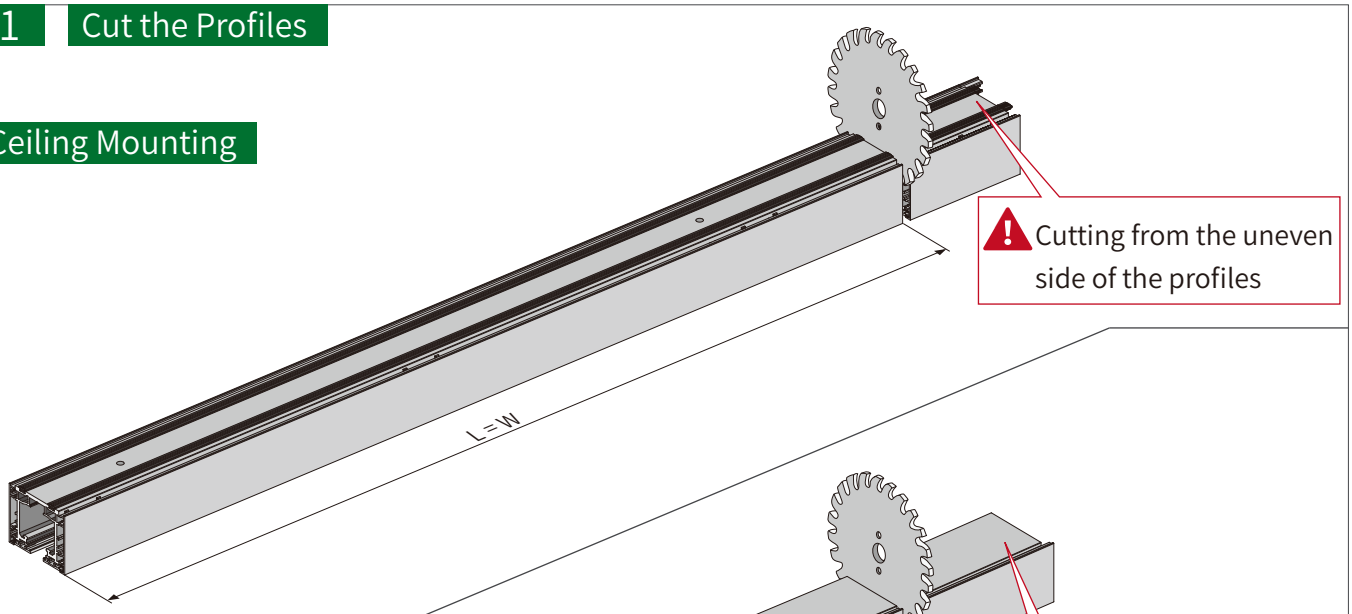

Wall Mounting

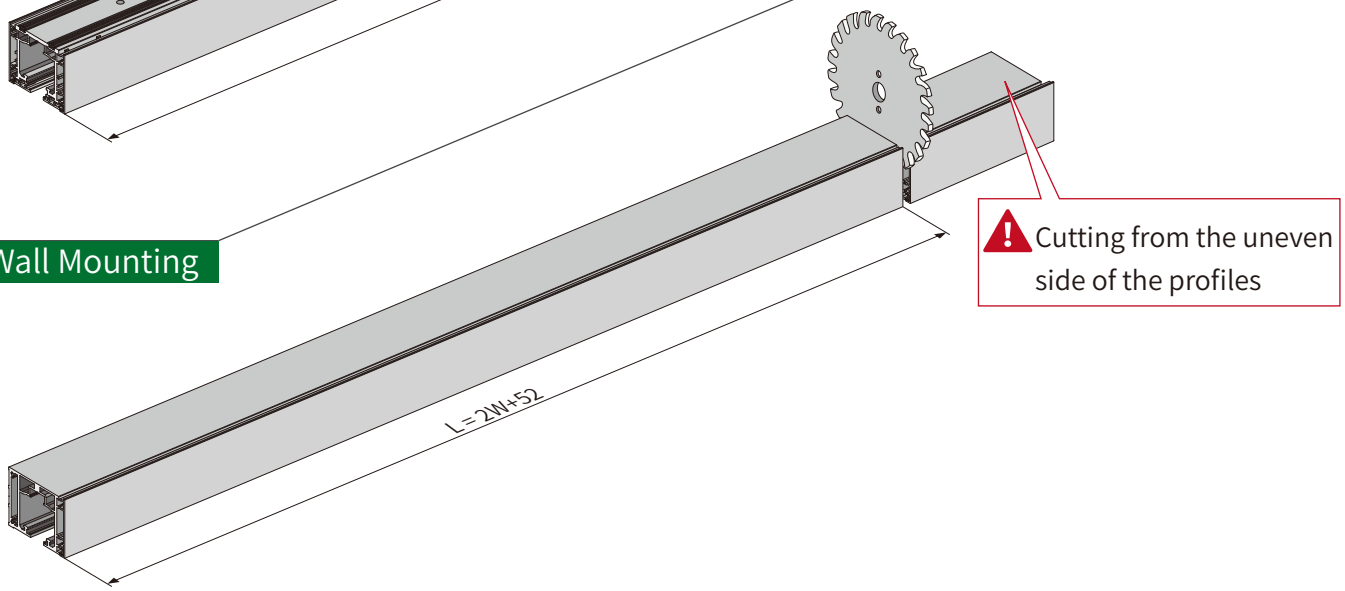

2 Disassemble the Profiles

Ceiling Mounting

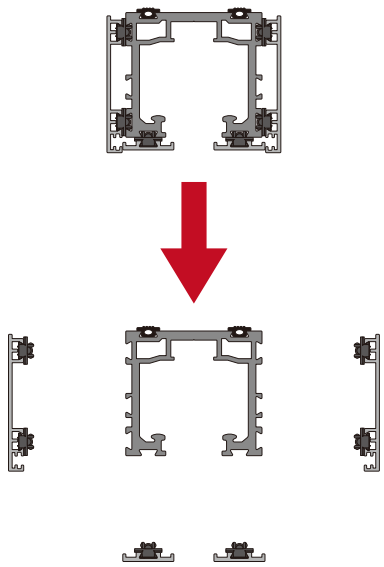

Wall Mounting

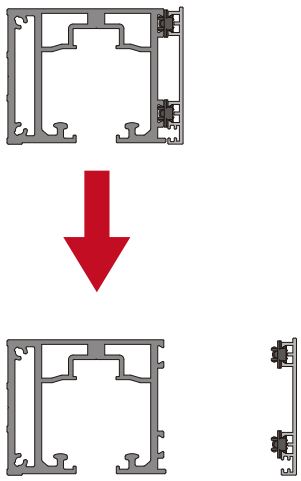

3 Install Rollers and Activators

Ceiling Mounting

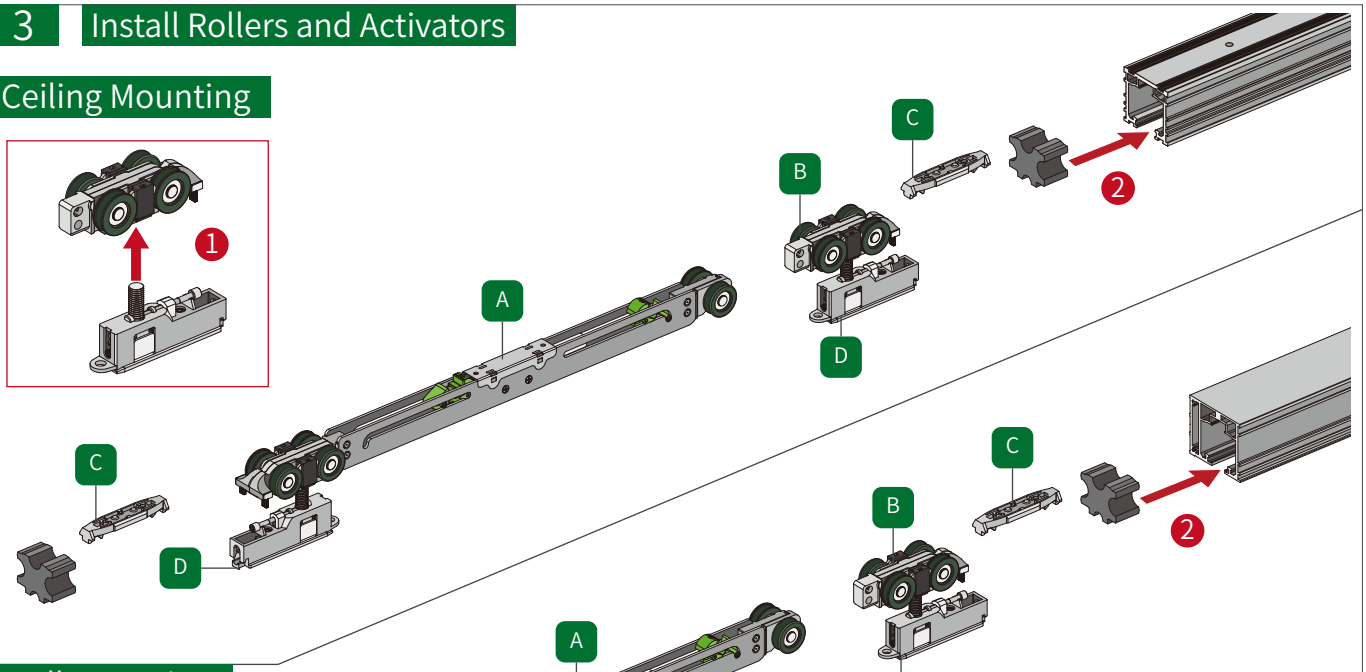

Wall Mounting

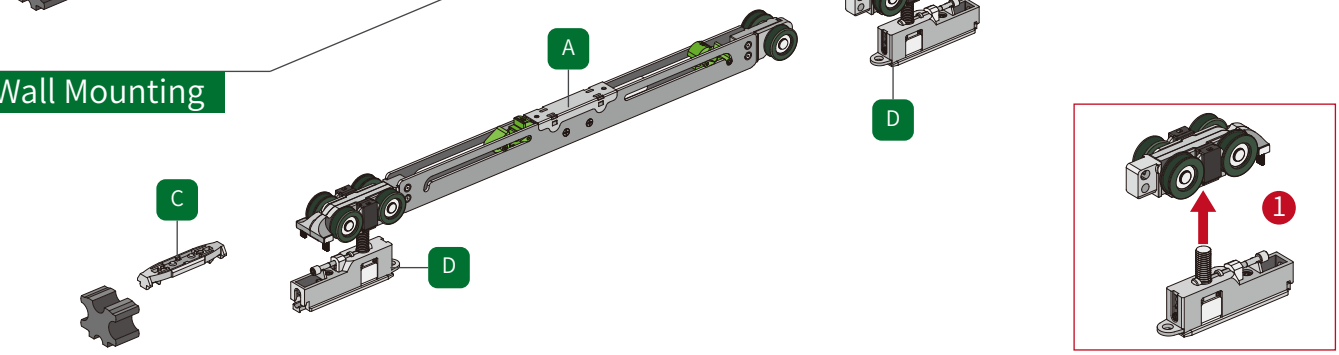

4-1 Install Running Track and Guiding Part

Ceiling Mounting

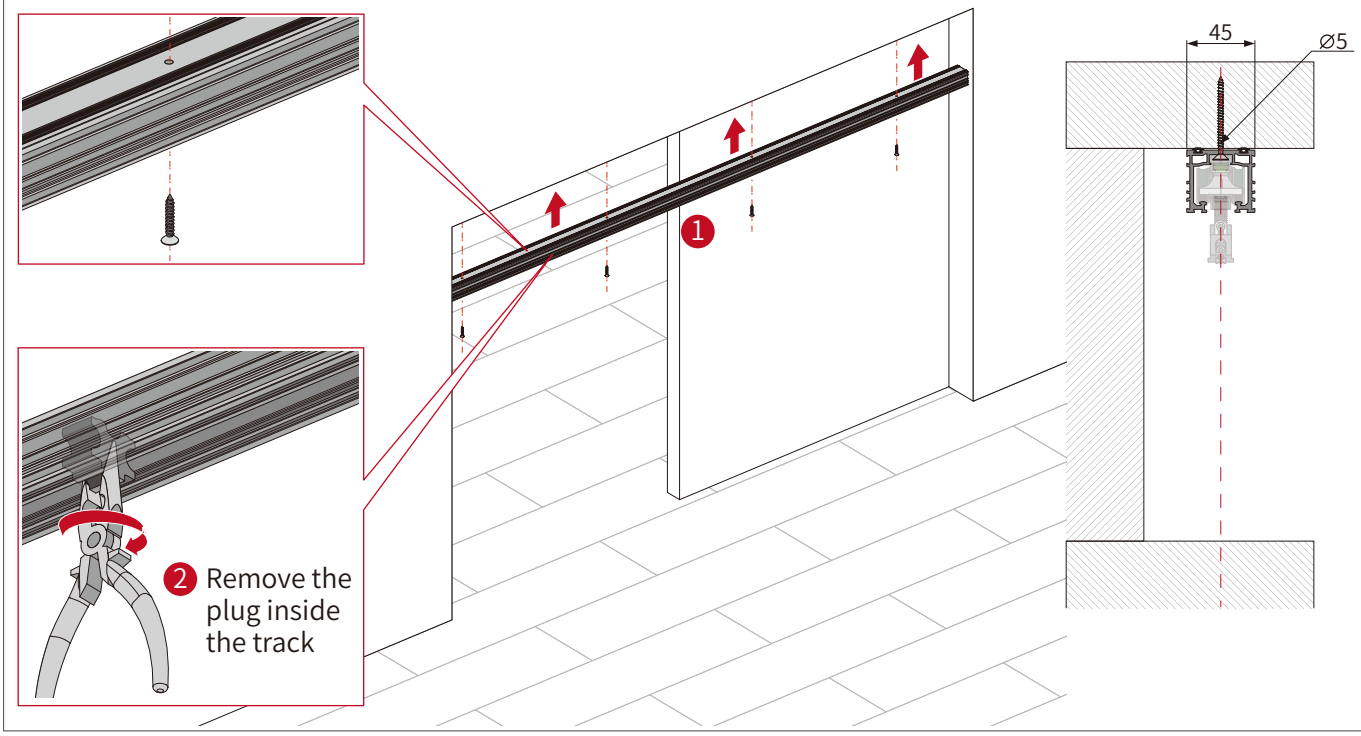

4-2 Install Running Track and Guiding Part

Ceiling Mounting

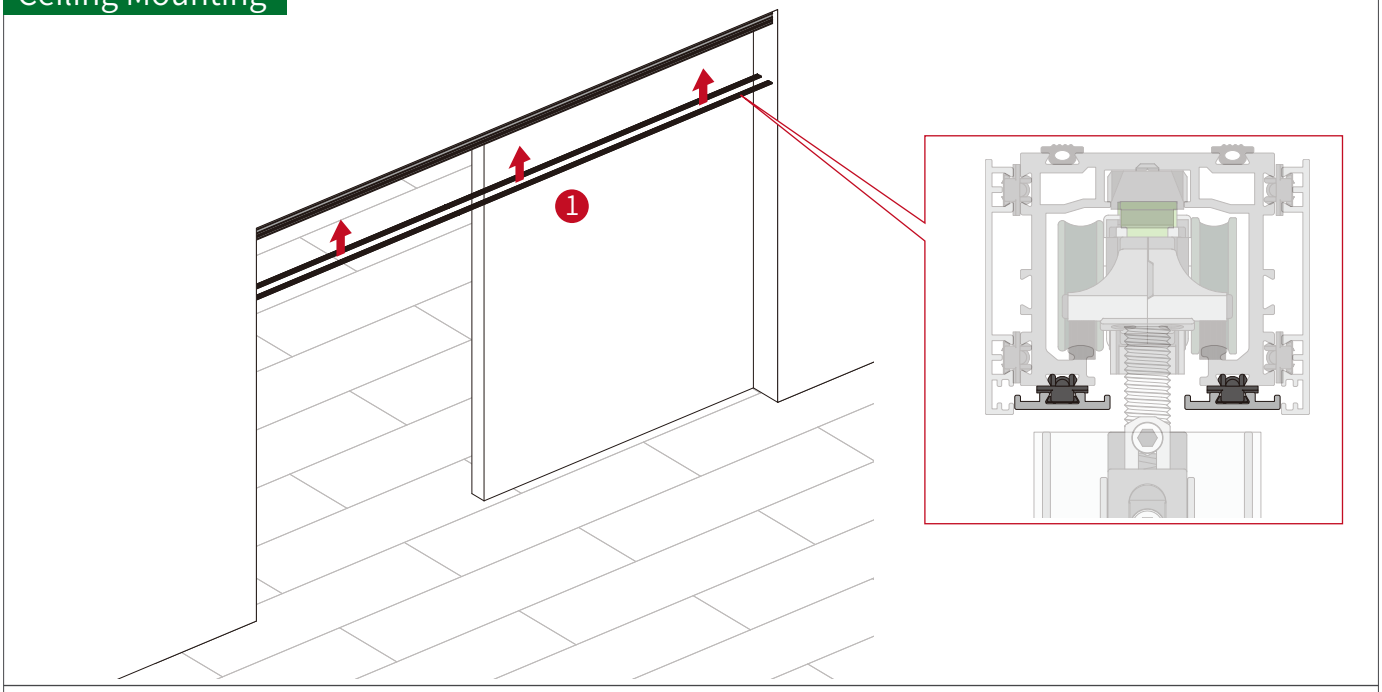

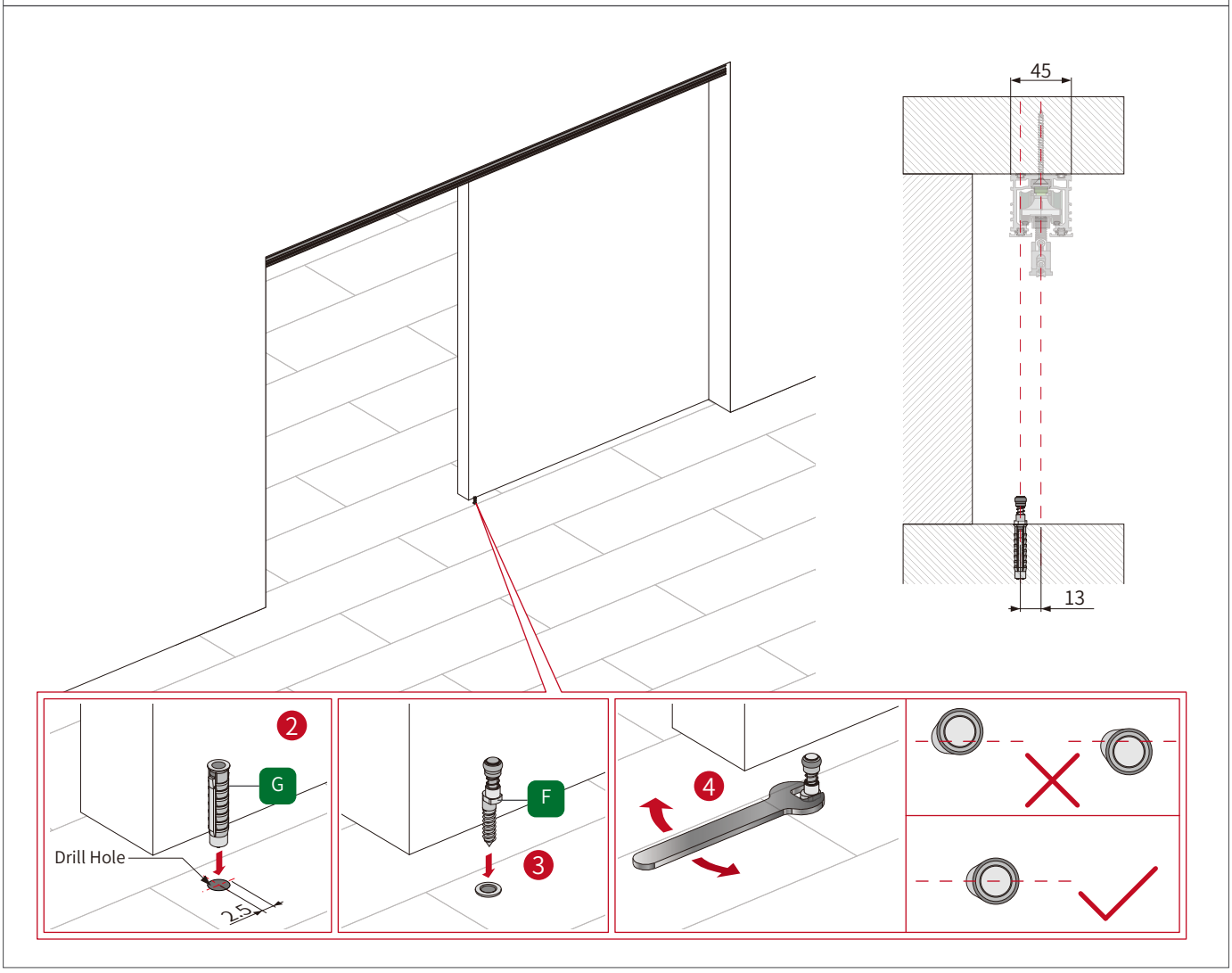

4-3 Install Running Track and Guiding Part

Wall Mounting

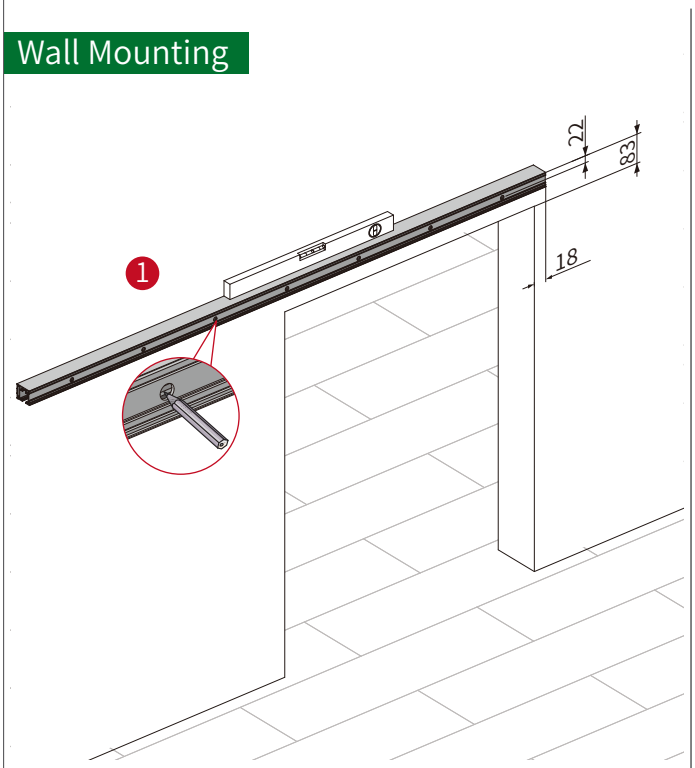

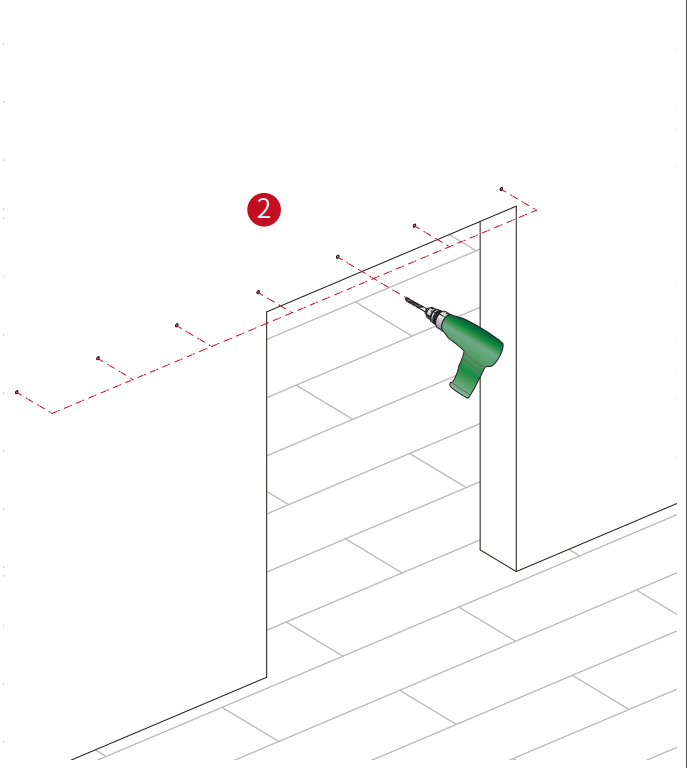

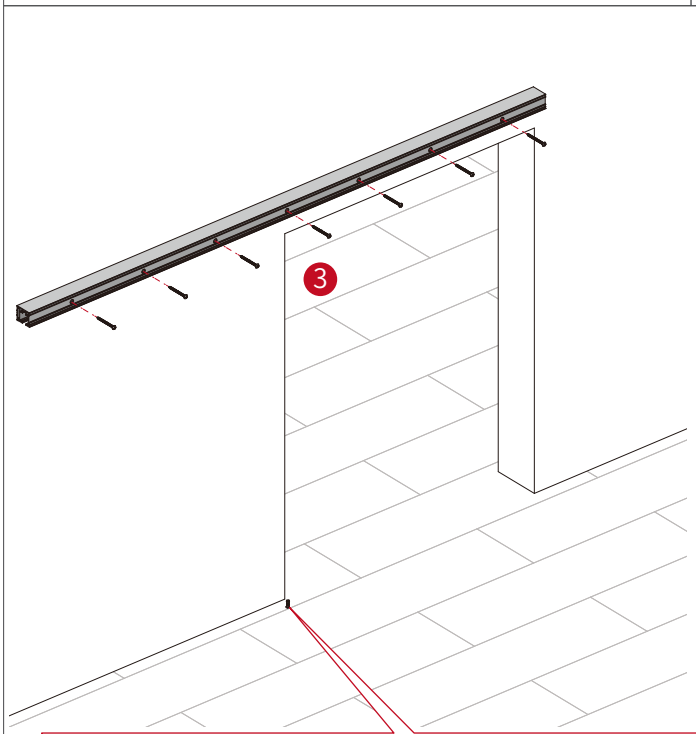

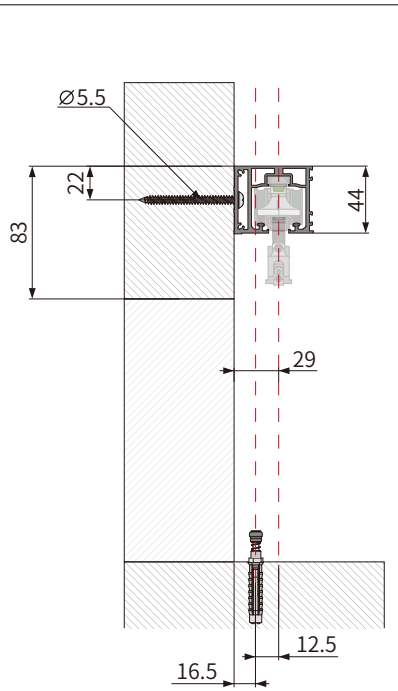

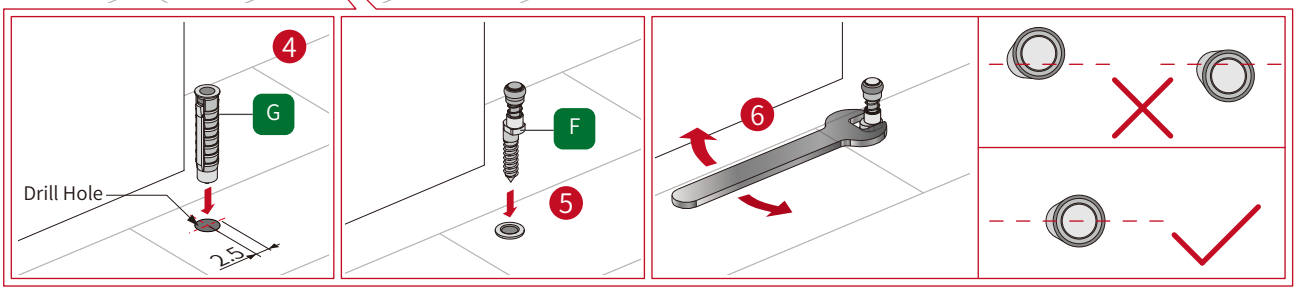

5 Install the Door Panel

Install the Fittings of Door Panel

Ceiling Mounting

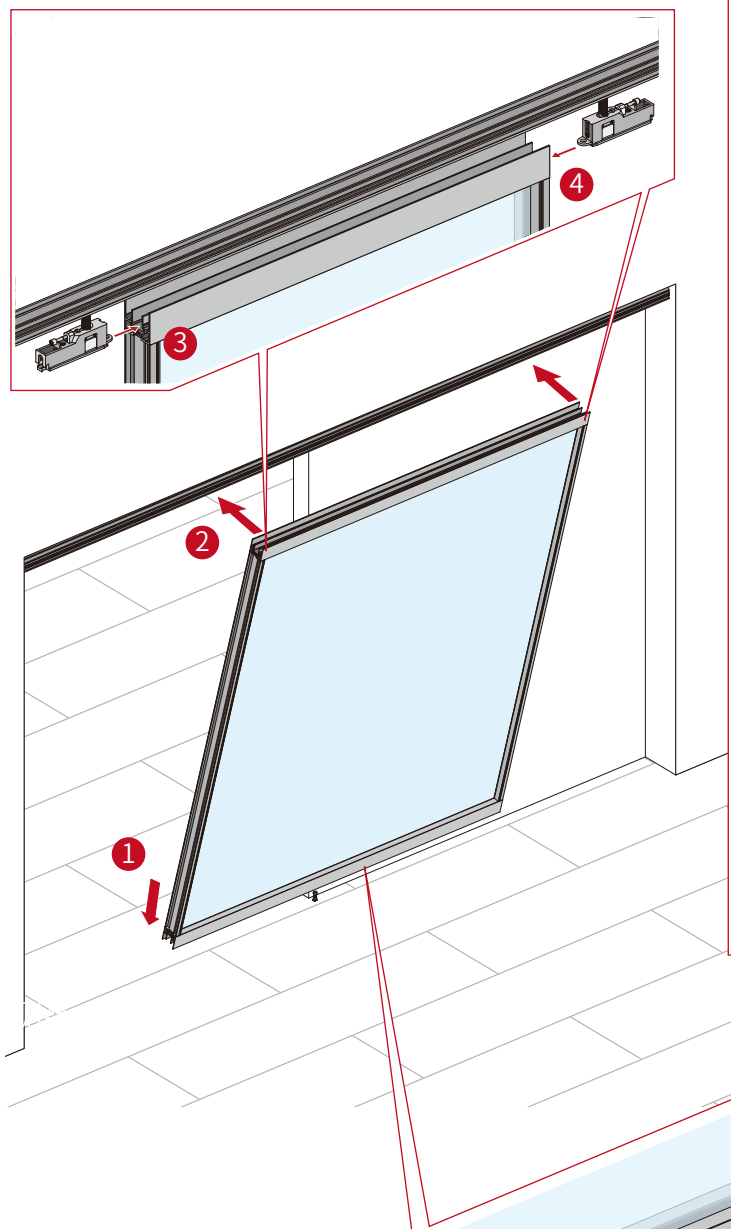

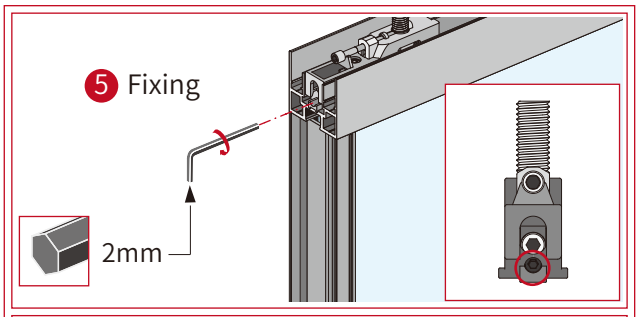

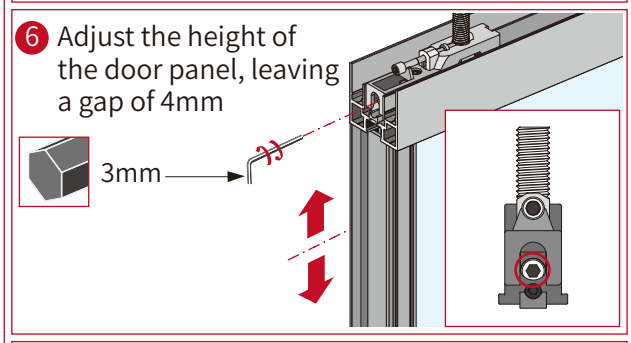

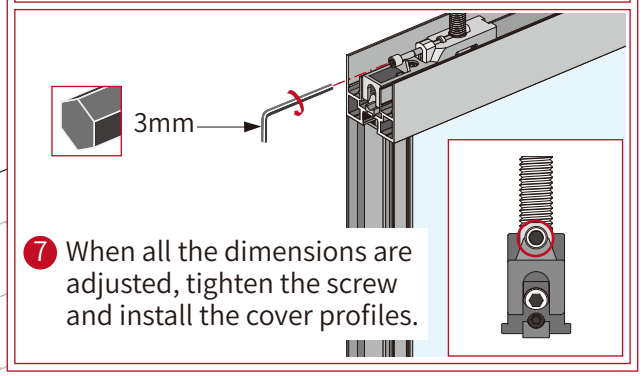

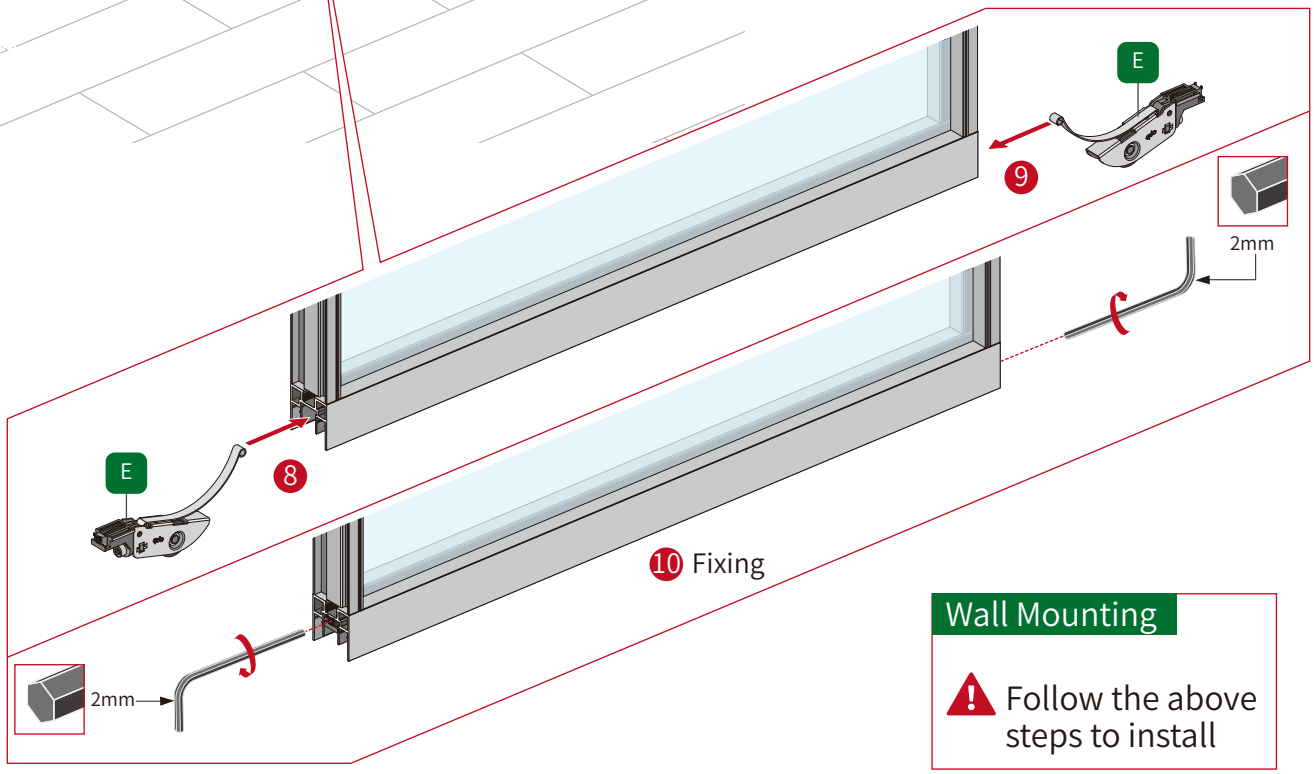

Wall Mounting

⚠ Follow the above steps to install

6 Install the Cover of Vertical Frame

Ceiling Mounting

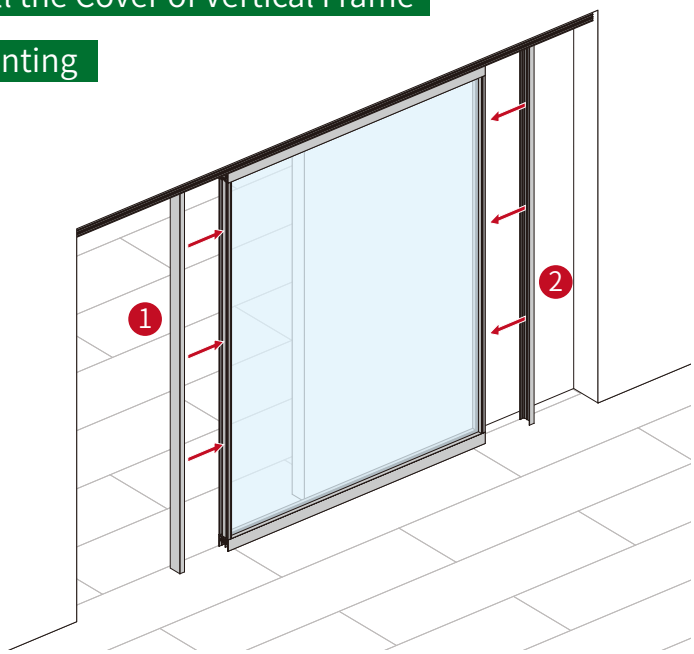

Wall Mounting

⚠ Follow steps ❶❷ to install

7 Activator Position

Ceiling Mounting

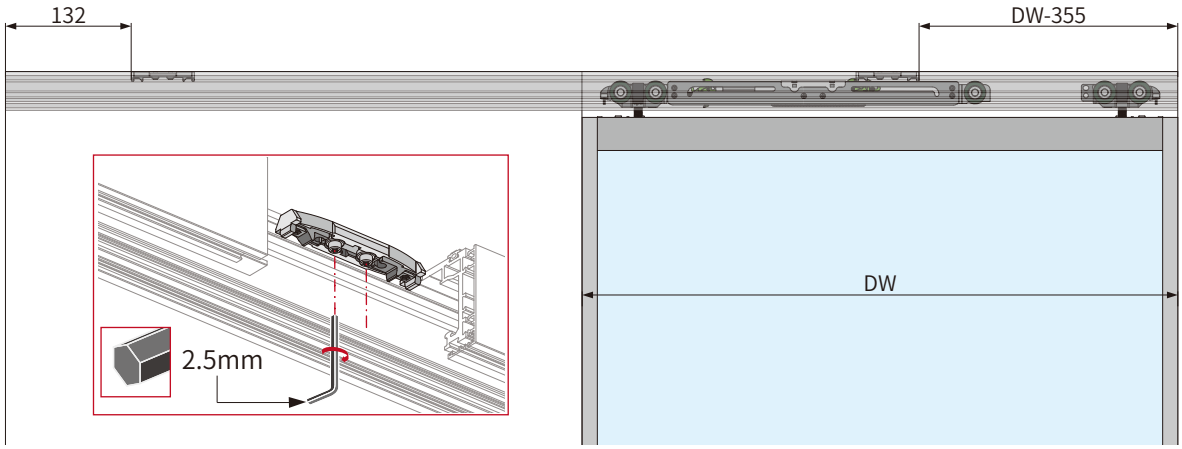

Wall Mounting

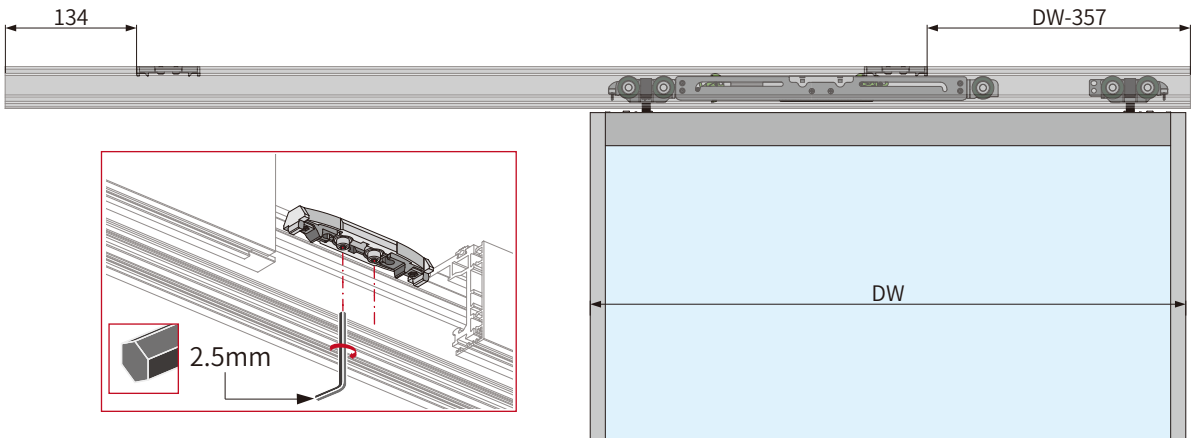

8 Install the Cover of Track

Ceiling Mounting

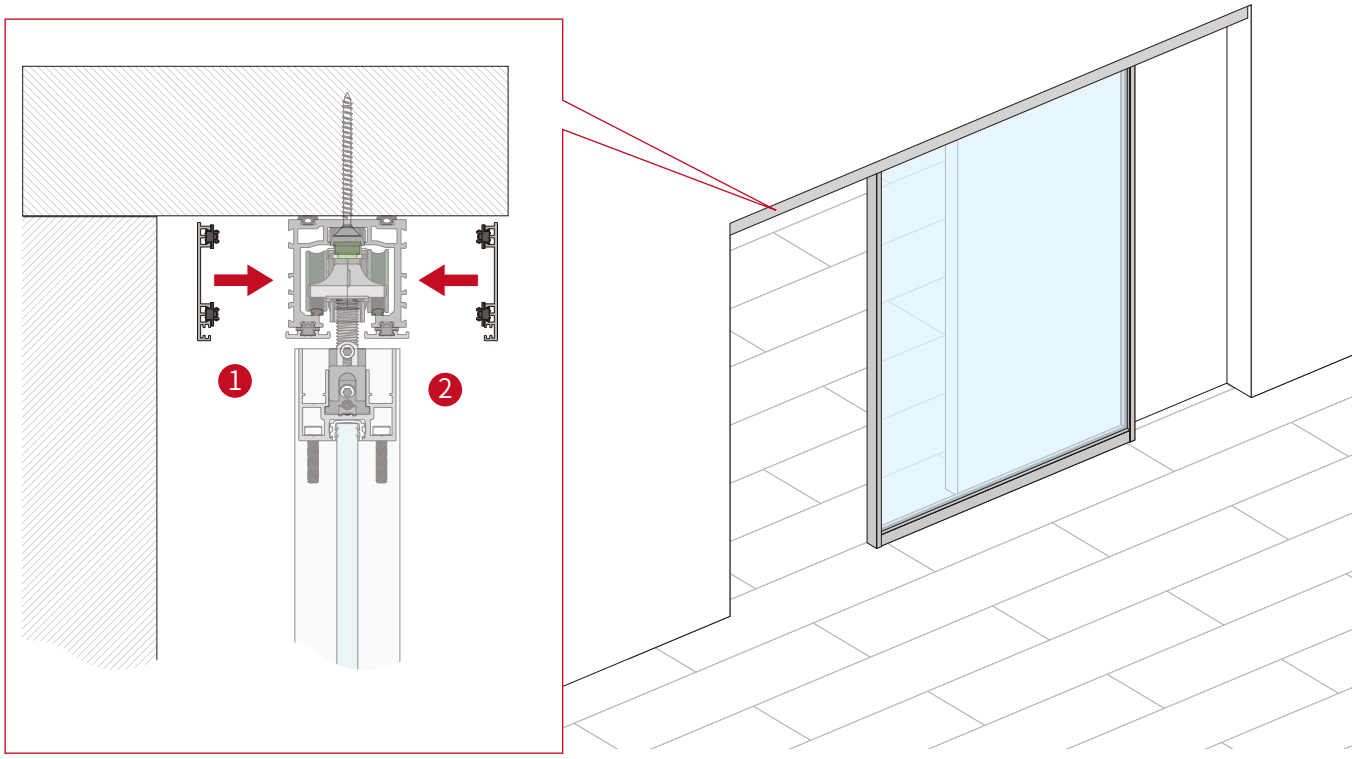

Wall Mounting

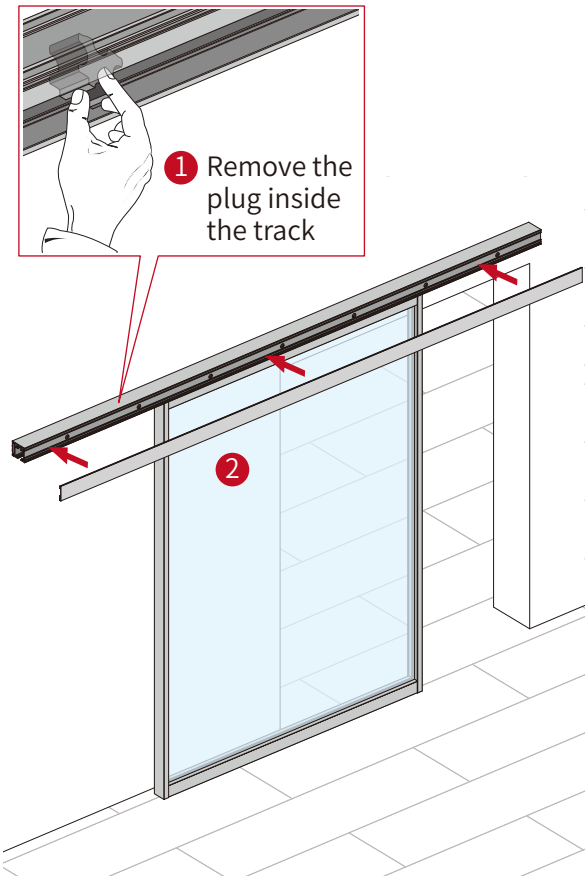

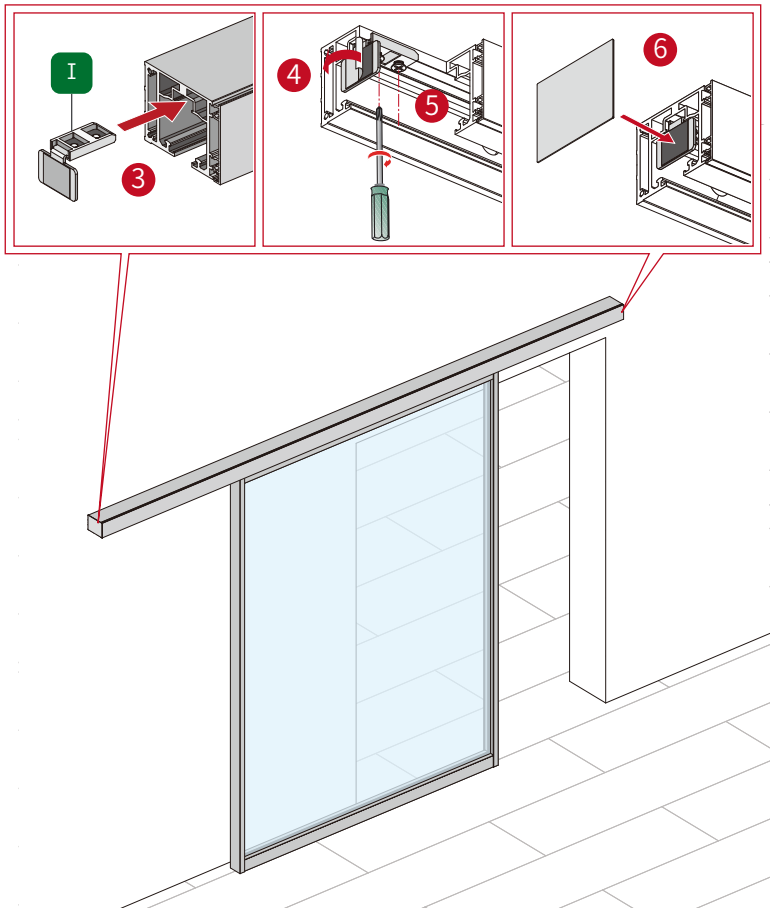

Maintenance & Replacing

Disassemble Running Part

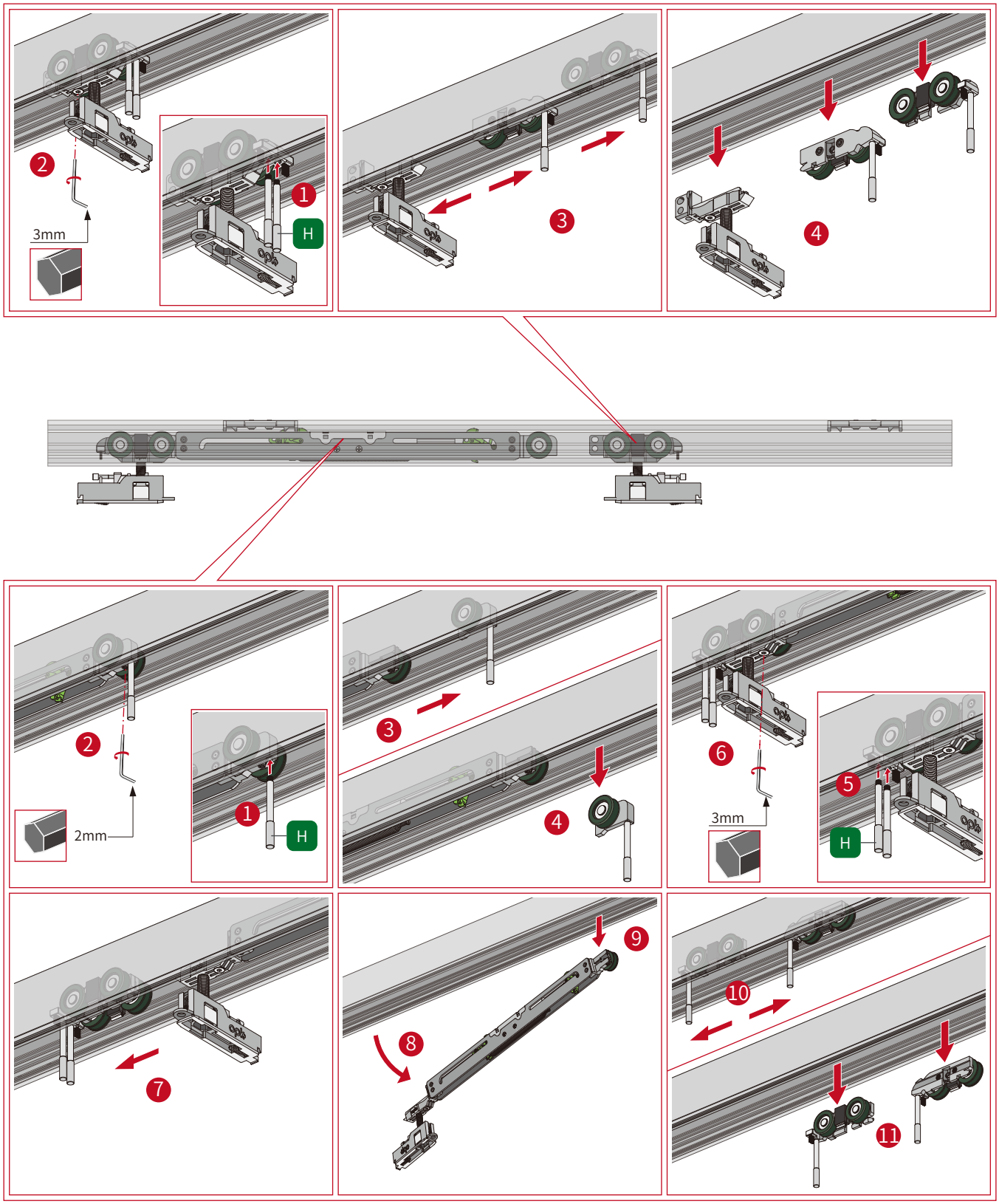

Maintenance & Replacing

Replacing Activator

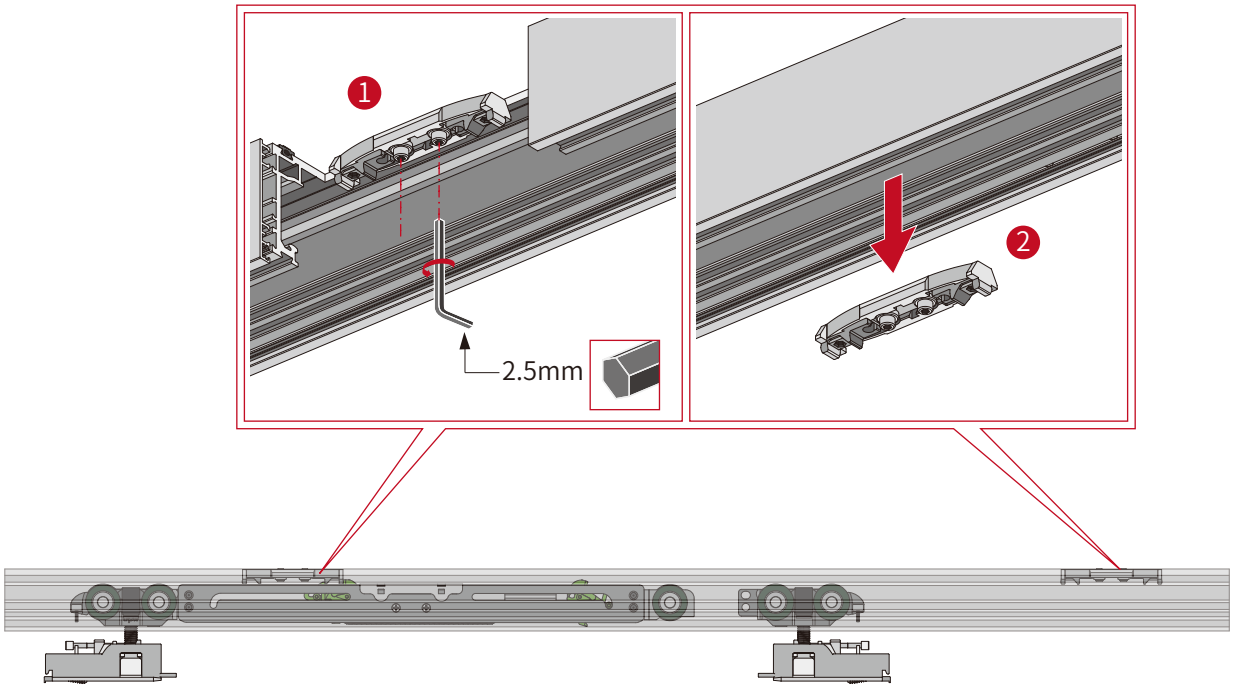

Reminder: Because the company's products will be upgraded and revised from time to time, the product style, color, accessories and related parameters in this information are for reference only. If there is any change without notice, please refer to the actual product. All interpretation rights belong to OPK.