drawn on the left (mirrored on the right)

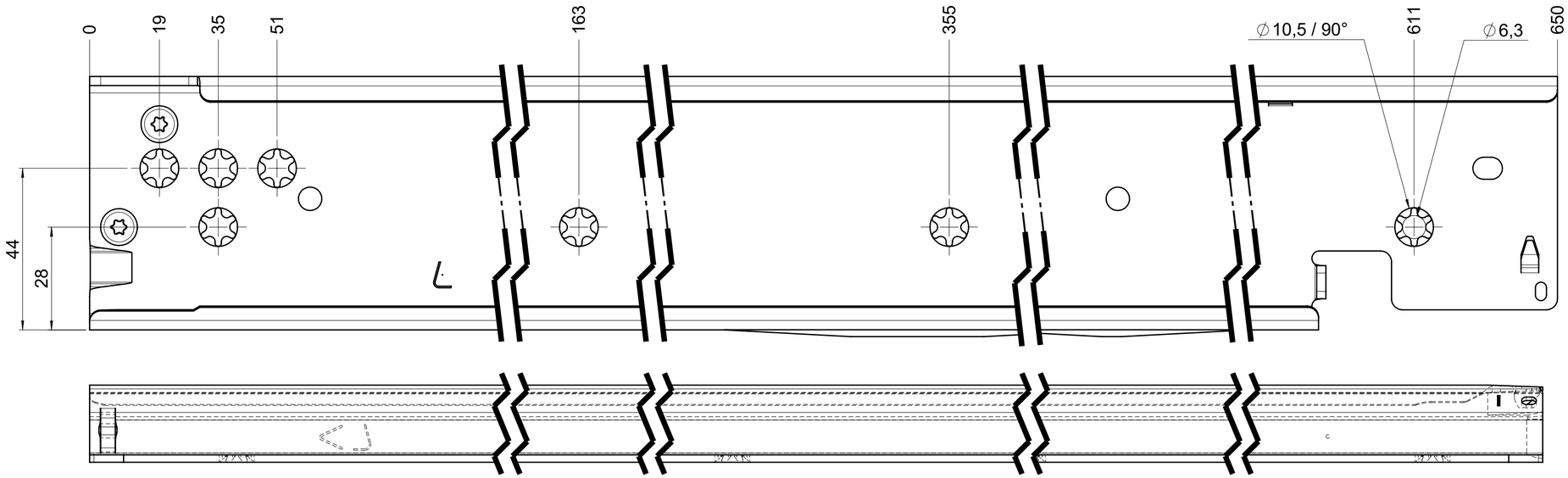

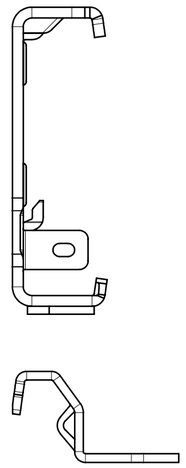

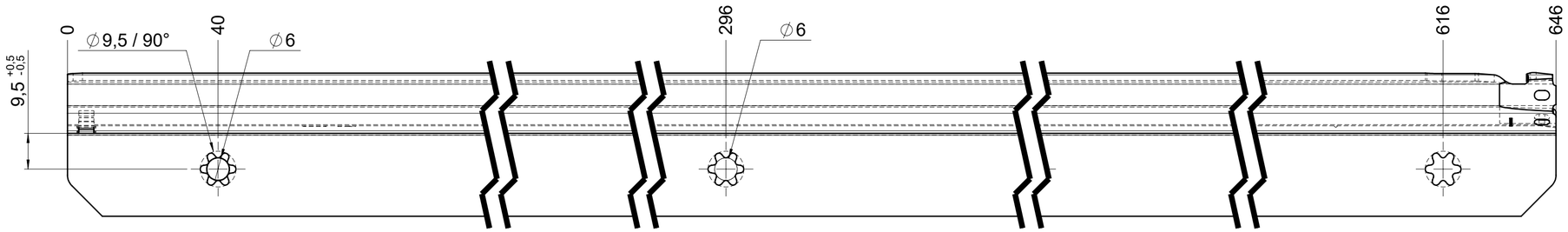

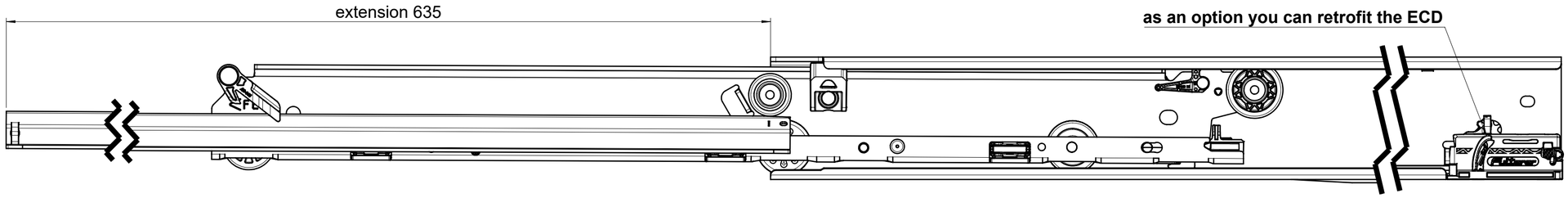

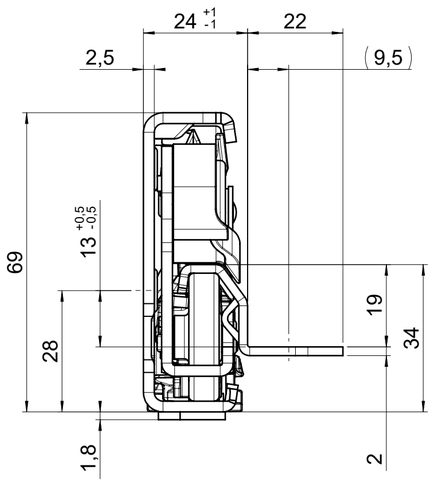

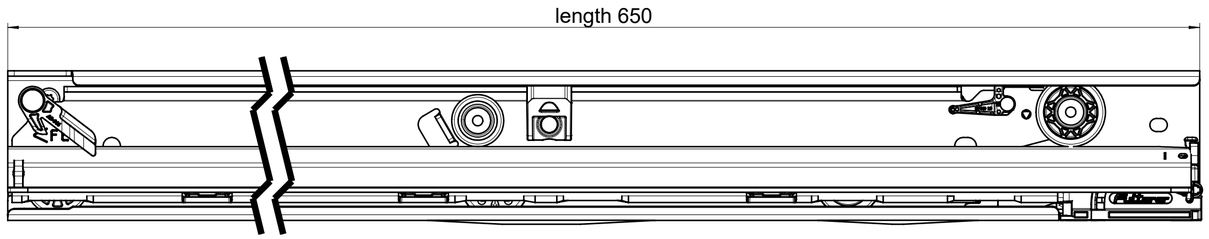

final approval	
	customer name:
	signed by:
	date:

all dimensions in mm

missing dimensions see 3D ⌭ = theor. intersection	DIN ISO 128-30	scale: 1:1	surface/color:
released			

	date	name
drawn	2025-09-09	PH
proven	2025-10-13	RP

ind.	changes	date	name

Fulterer AG & Co KG
A-6890 Lustenau
Fulterer AG
CH-9430 St. Margrethen

material: (technical requirements Fulterer)
CS

description:
FR 7096-650 CS EN (mm)
progressive-action full-extension drawerslide / bottom mount

drawing number:
CS# 7096.650-GA.0000

replaces the edition:

A2

This drawing remains our property and may not be multiplied neither be disclosed to third parties (§§1,3 and 5 from the copyright Act (UrhG)).

covered according to DIN ISO 16016