drawn on the left (mirrored on the right)

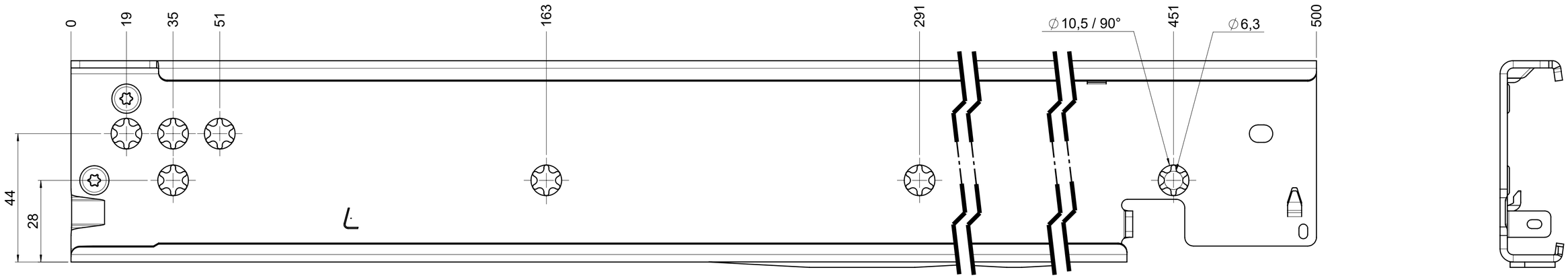

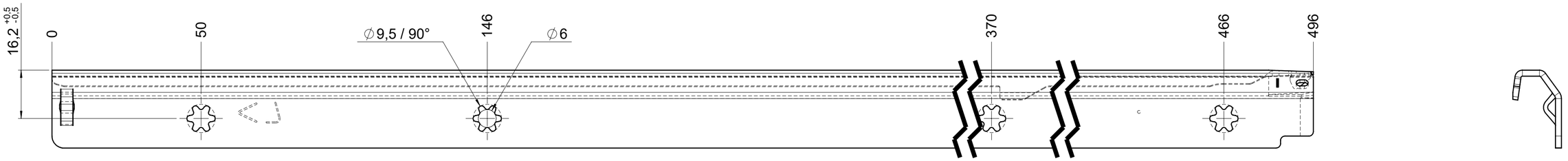

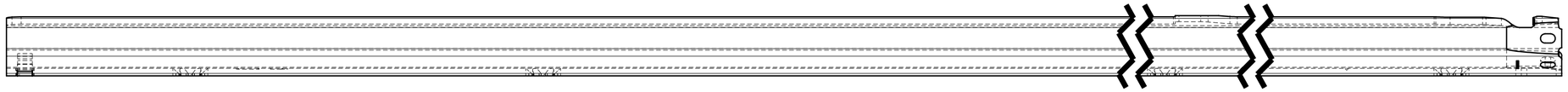

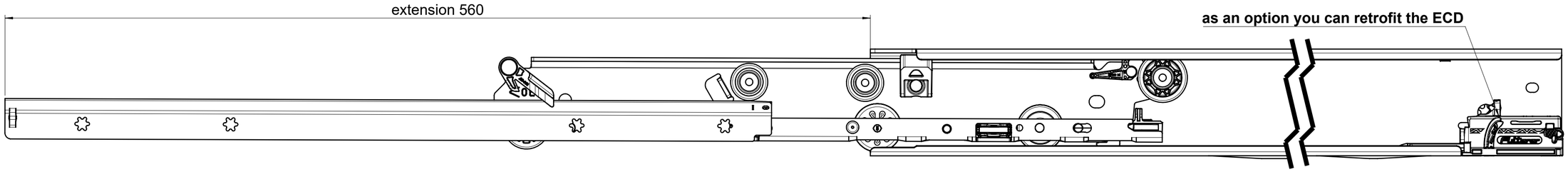

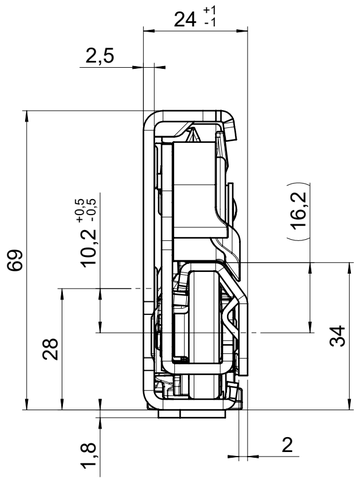

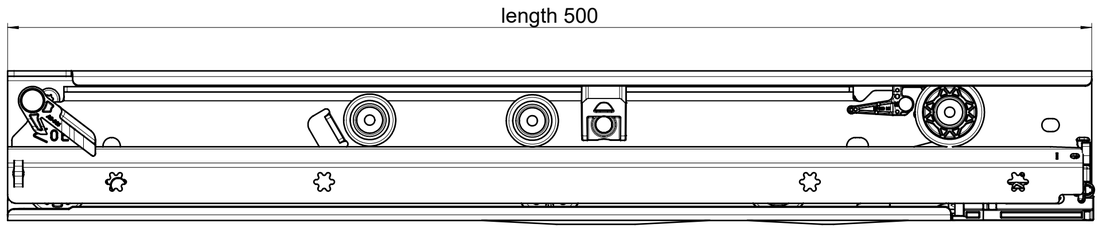

final approval	
	customer name:
	signed by:
	date:

all dimensions in mm

missing dimensions see 3D = theor. intersection	DIN ISO 128-30	scale: 1:1	surface/color:	material: (technical requirements Fulterer) **CS**
released			drawn 2025-09-05 PH proven 2025-10-13 RP	description: **FR 7095-500 CS EN (mm)** progressive-action over-extension drawerslide / side mount
ind. changes	date	name	Fulterer AG & Co KG A-6890 Lustenau Fulterer AG CH-9430 St. Margrethen	drawing number: CS# 7095.500-GA.L130 replaces the edition:

This drawing remains our property and may not be multiplied neither be disclosed to third parties (§§1,3 and 5 from the copyright Act (UrhG)).

covered according to DIN ISO 16016

A2