drawn on the left (mirrored on the right)

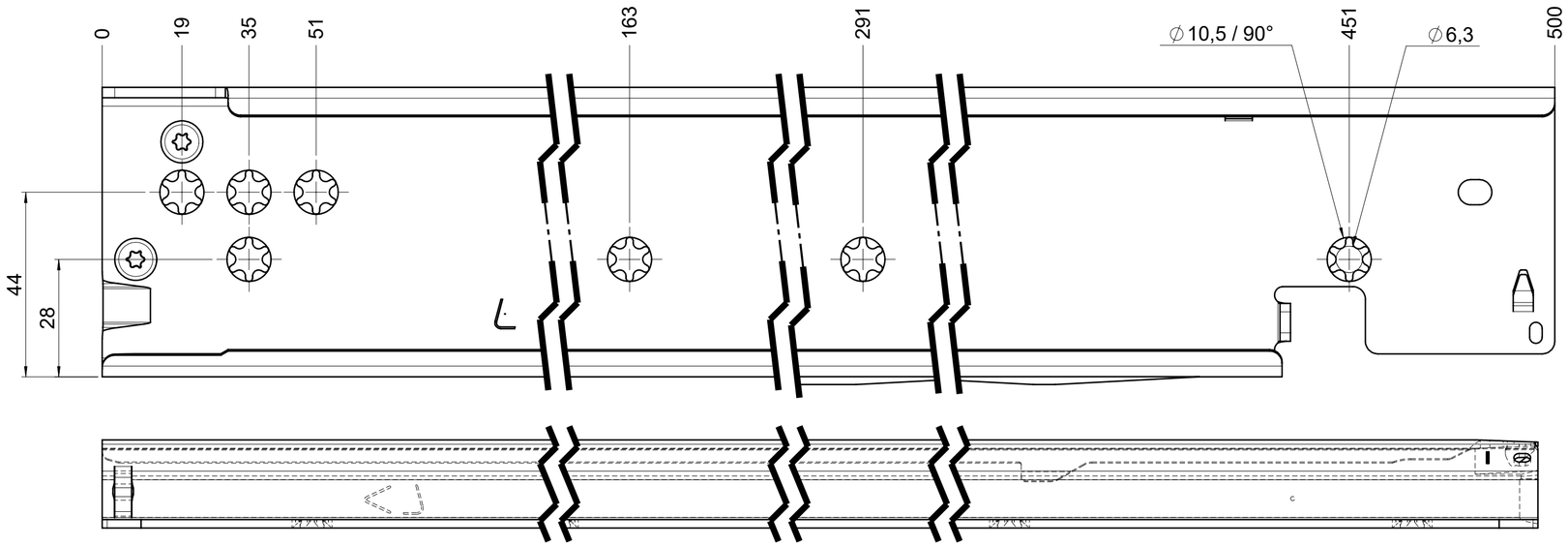

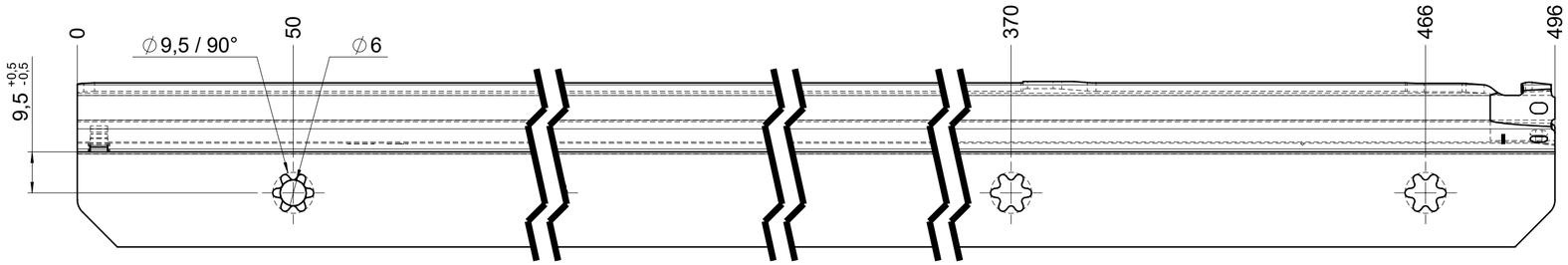

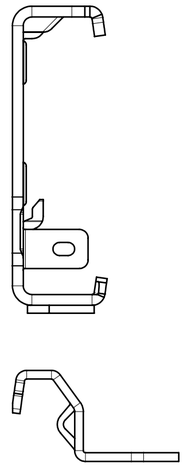

extension 485

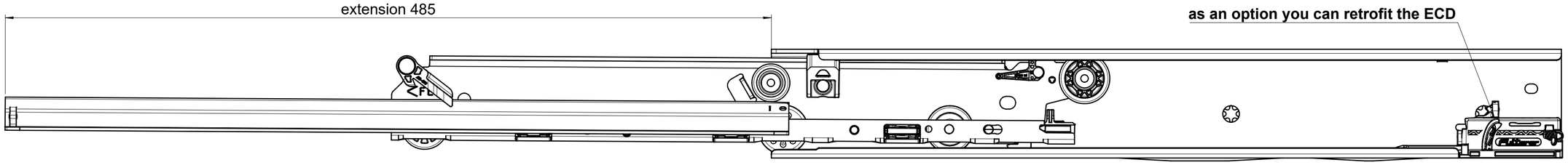

length 500

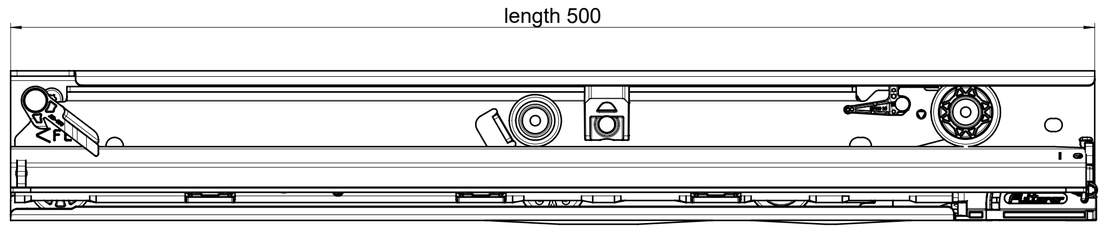

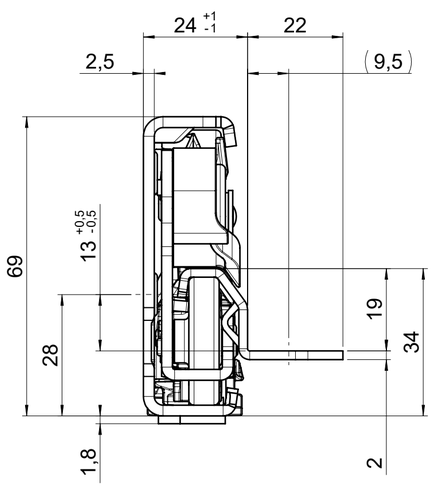

final approval	
	customer name:
	signed by:
	date:

all dimensions in mm

missing dimensions see 3D
= theor. intersection

DIN ISO 128-30

scale: 1:1

surface/color:

material: CS (technical requirements Fulterer)

released

	date	name
drawn	2025-09-09	PH
proven	2025-10-13	RP

description:
FR 7096-500 CS EN (mm)
progressive-action full-extension drawerslide / bottom mount

ind.	changes	date	name

Fulterer

Fulterer AG & Co KG
A-6890 Lustenau

Fulterer AG
CH-9430 St. Margrethen

drawing number:
CS# 7096.500-GA.0000

replaces the edition:

A2

This drawing remains our property and may not be multiplied neither be disclosed to third parties (§§1,3 and 5 from the copyright Act (UrhG)).

covered according to DIN ISO 16016