opk Spaceship W Minimal Pocket Mounting Instruction

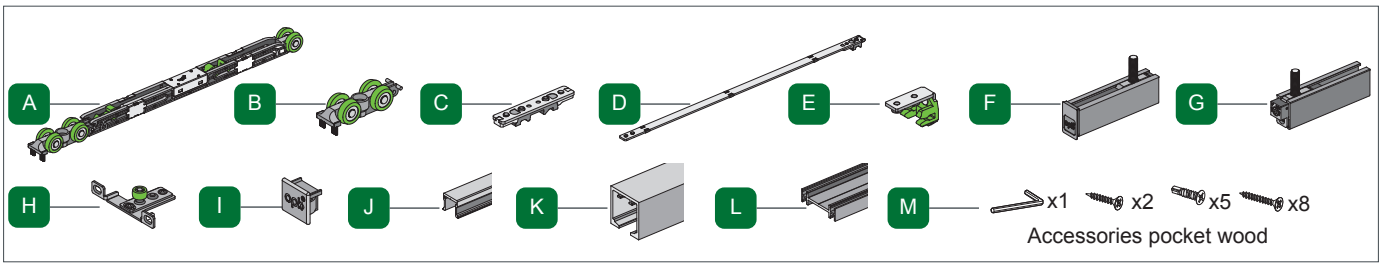

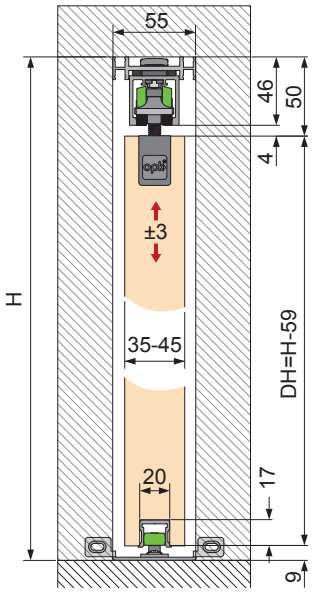

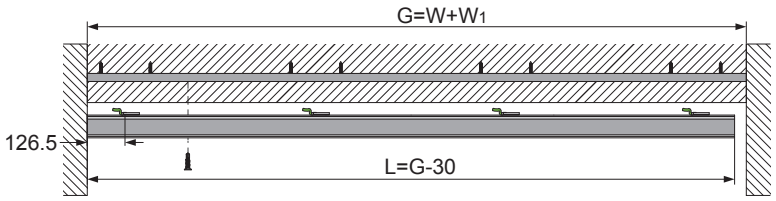

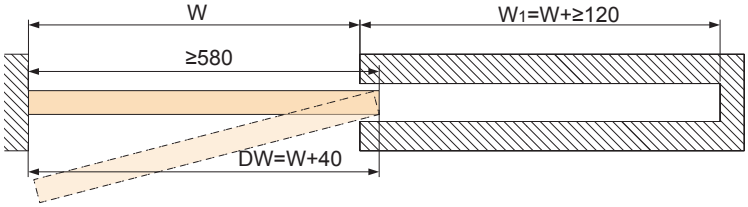

1

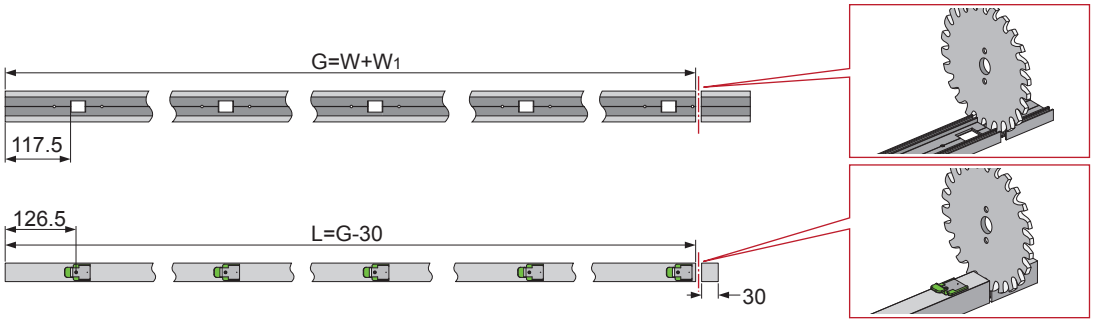

2

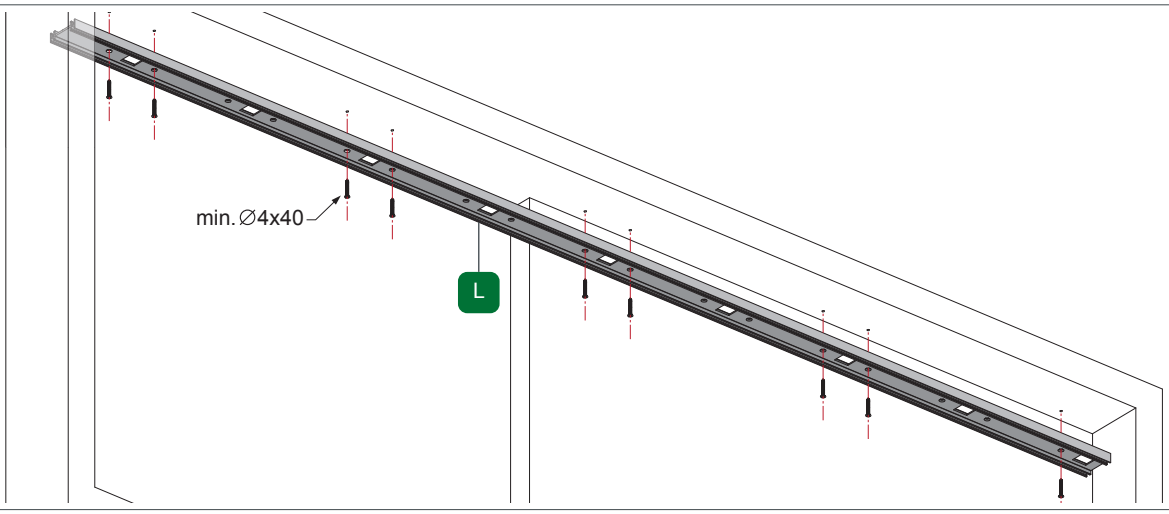

3

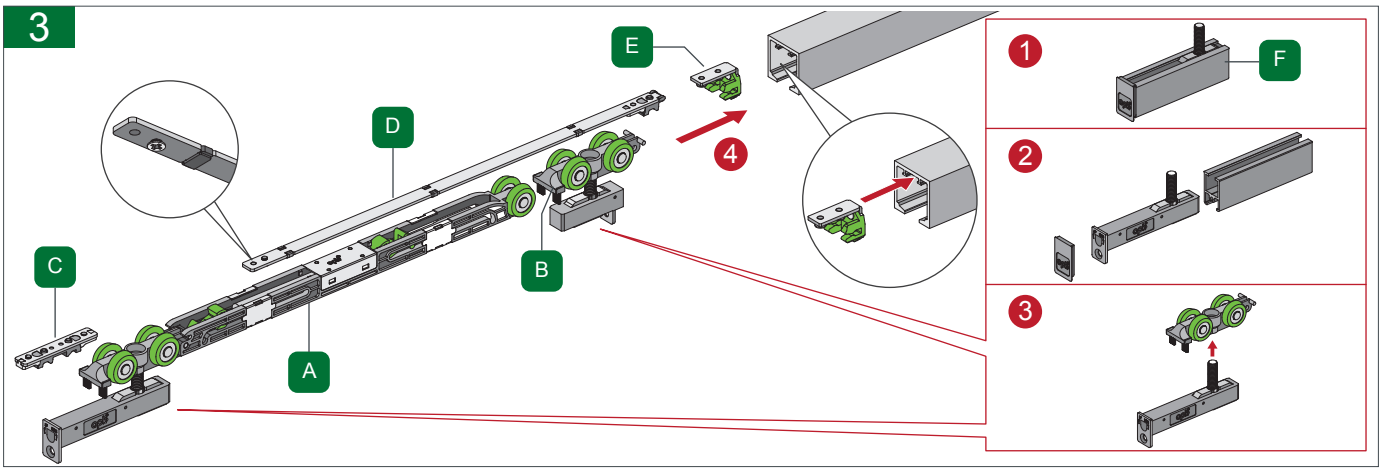
E
D
C
B
A
4
1
F
2
3

4

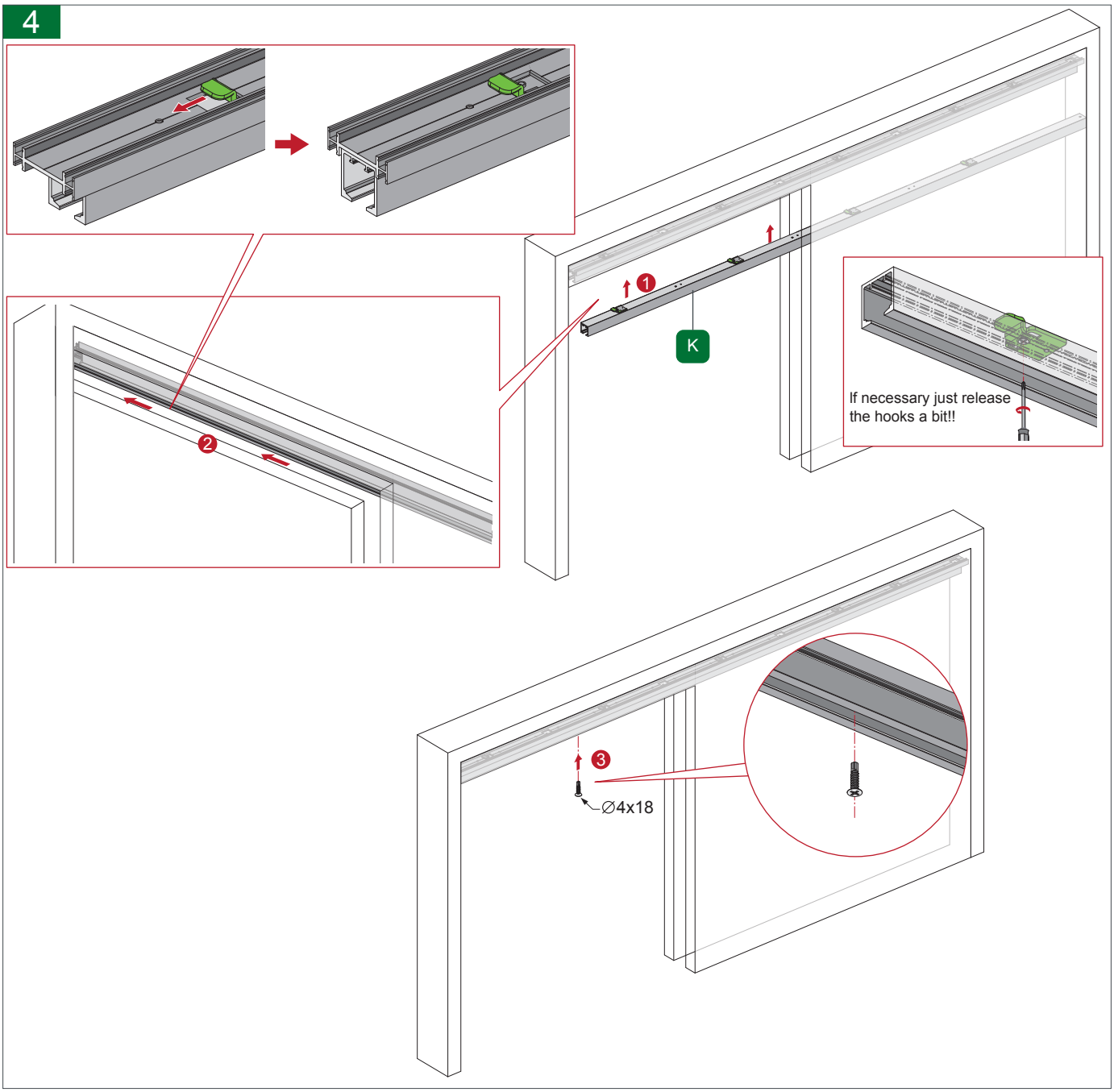
1
K
2
If necessary just release
the hooks a bit!!
3
∅4x18

5

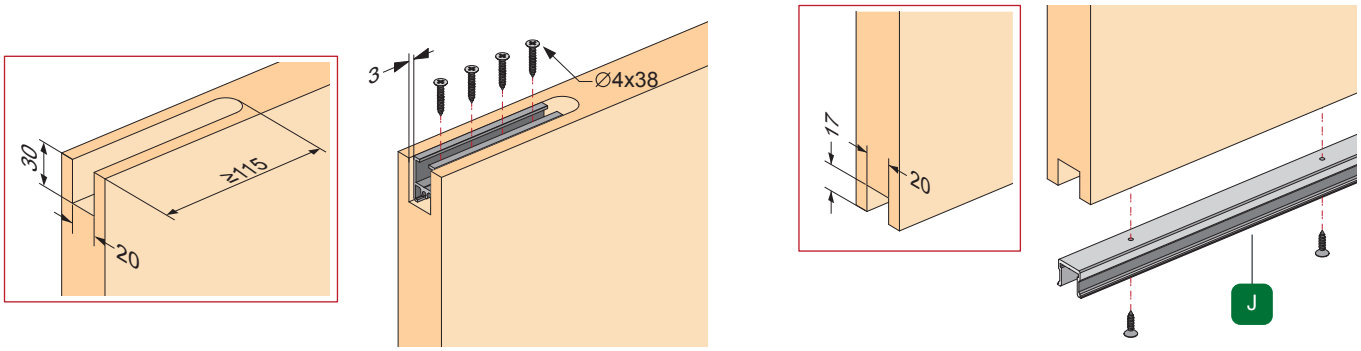
30
≥115
20
3
∅4x38
17
20
J

6

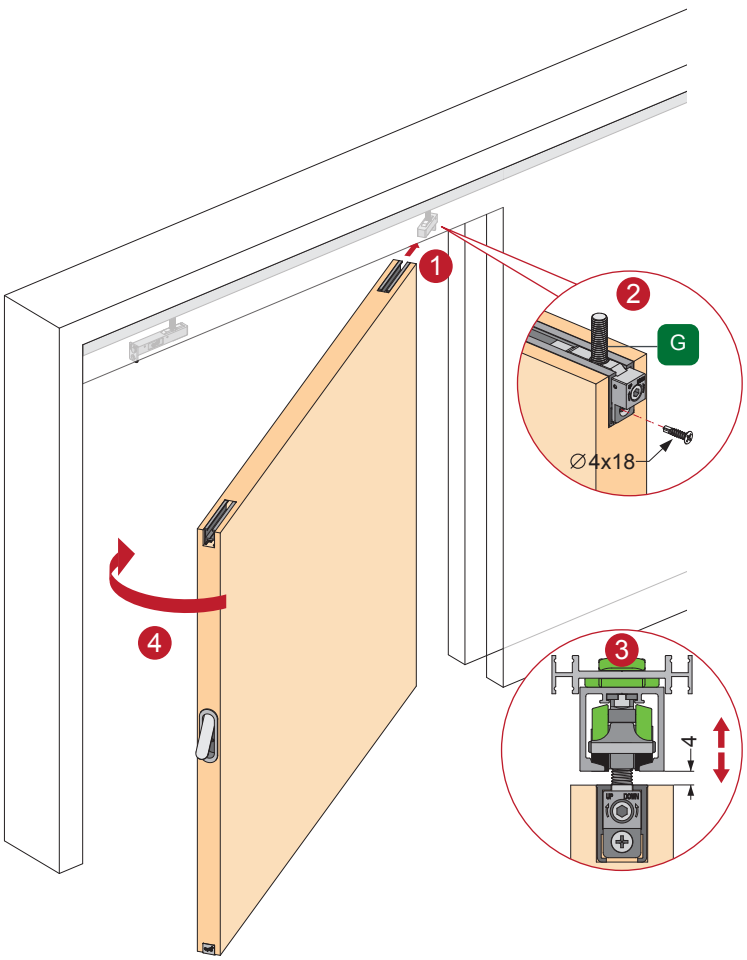
1
2
G
∅4x18
3
4
4

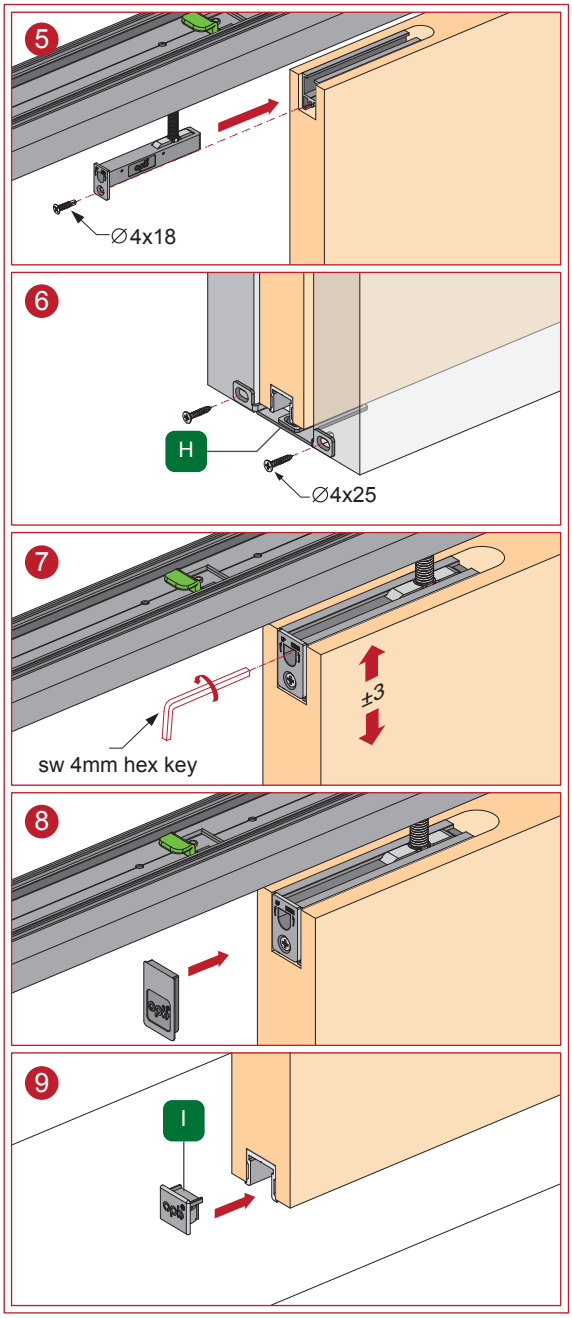
5
∅4x18
6
H
∅4x25
7
±3
sw 4mm hex key
8
9
I

7

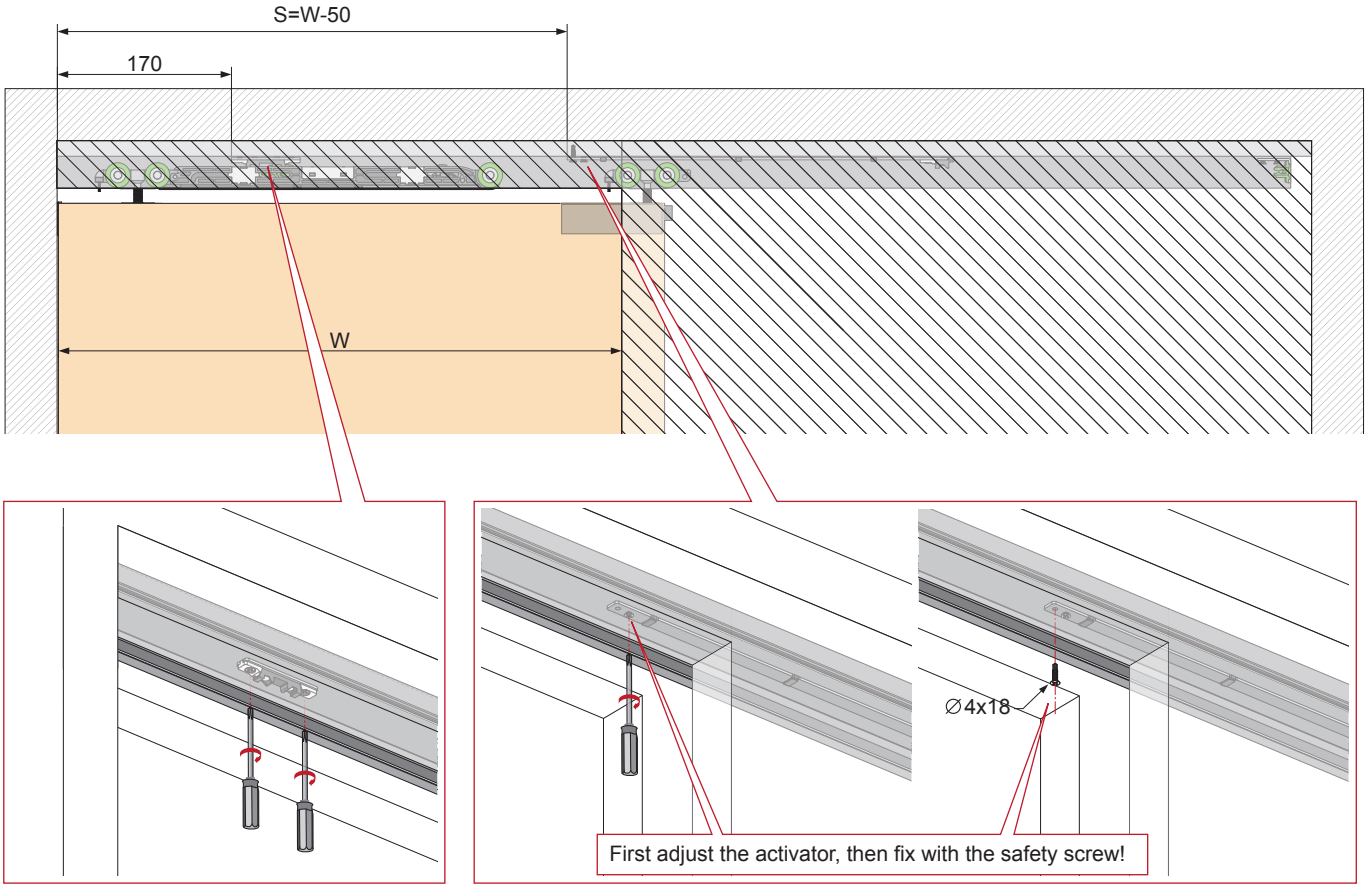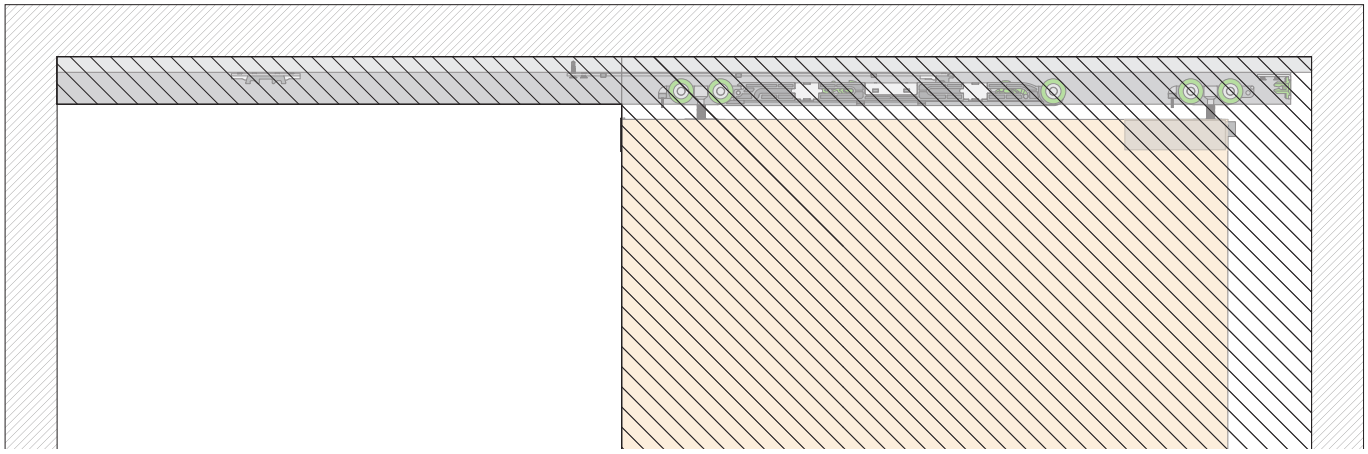
S=W-50
170
W
∅4x18
First adjust the activator, then fix with the safety screw!