opk Cruiser 3 Mounting Instruction

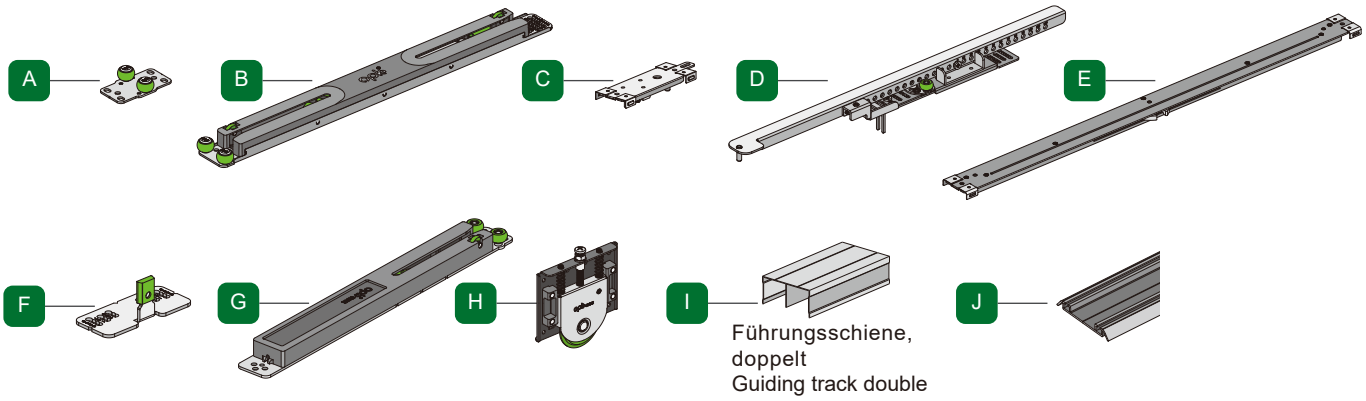

	A (16mm)	A (18mm)	A (19mm)
C	13.5mm	12.5mm	12mm
D	24.5mm	22.5mm	21.5mm
E	10mm	8mm	7mm
F	24mm	25mm	25.5mm

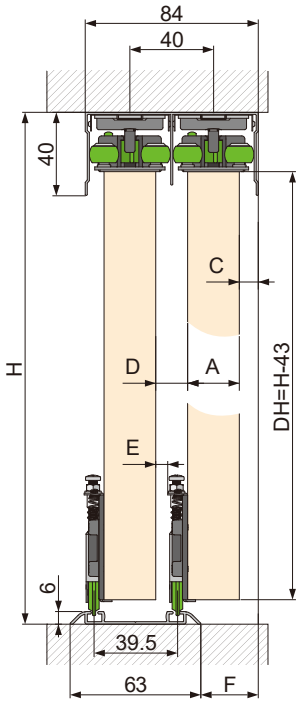

Beidseitige Dämpfung
Both sides damping

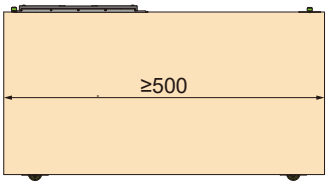

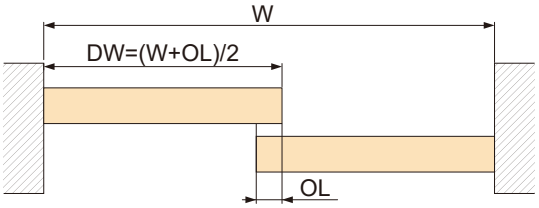

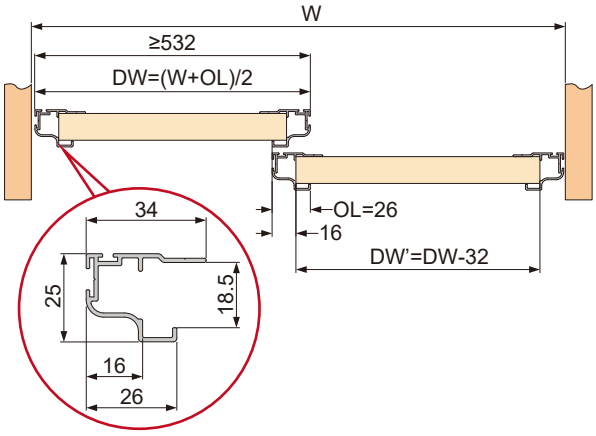

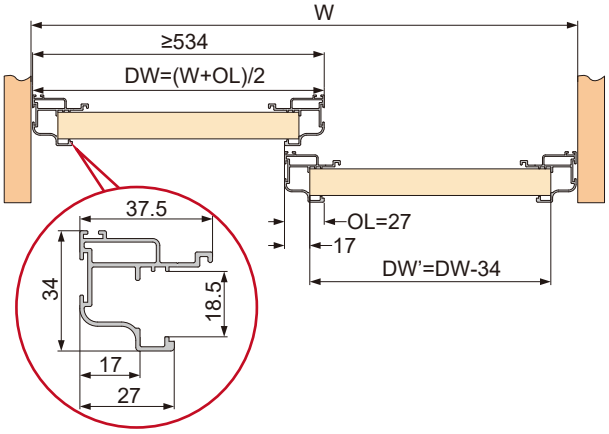

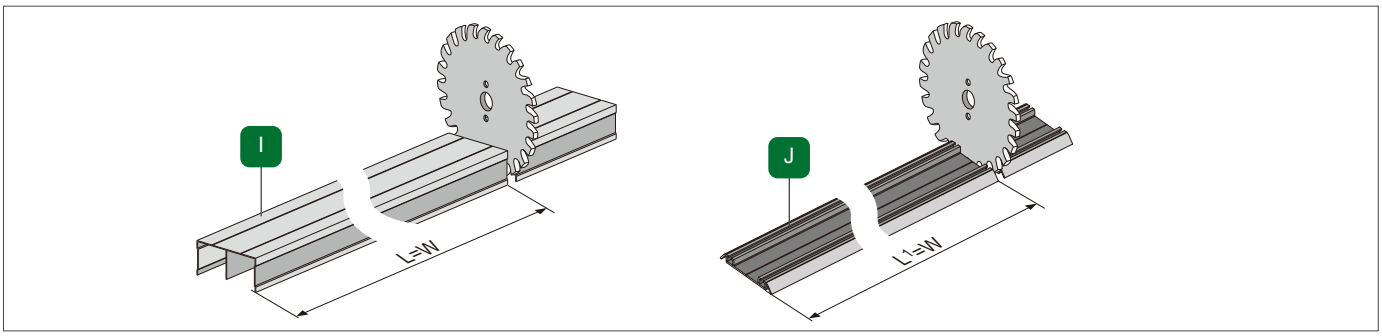
I
L=W
J
L1=W

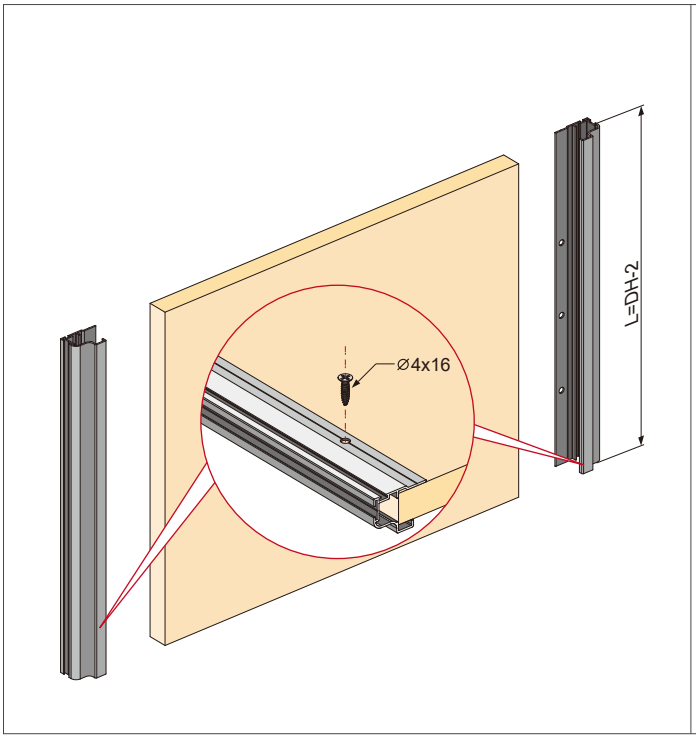
Ø4x16
L=DH-2

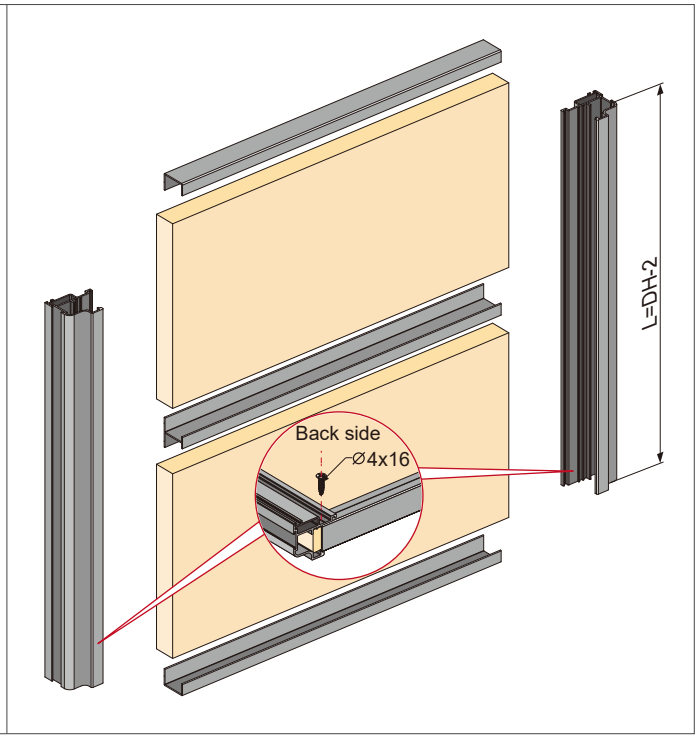
Back side
Ø4x16
L=DH-2

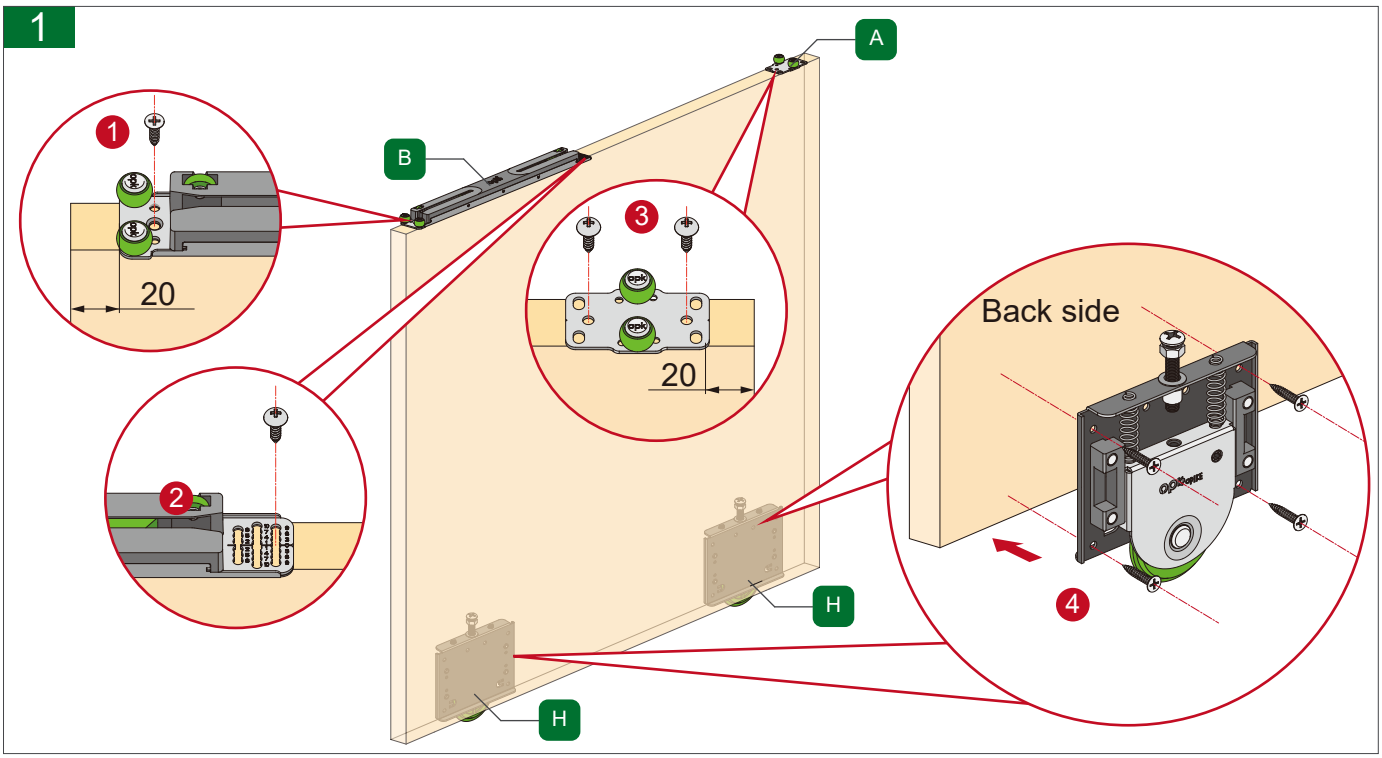
1
A
B
1
20
2
3
20
Back side
4
H
H

2

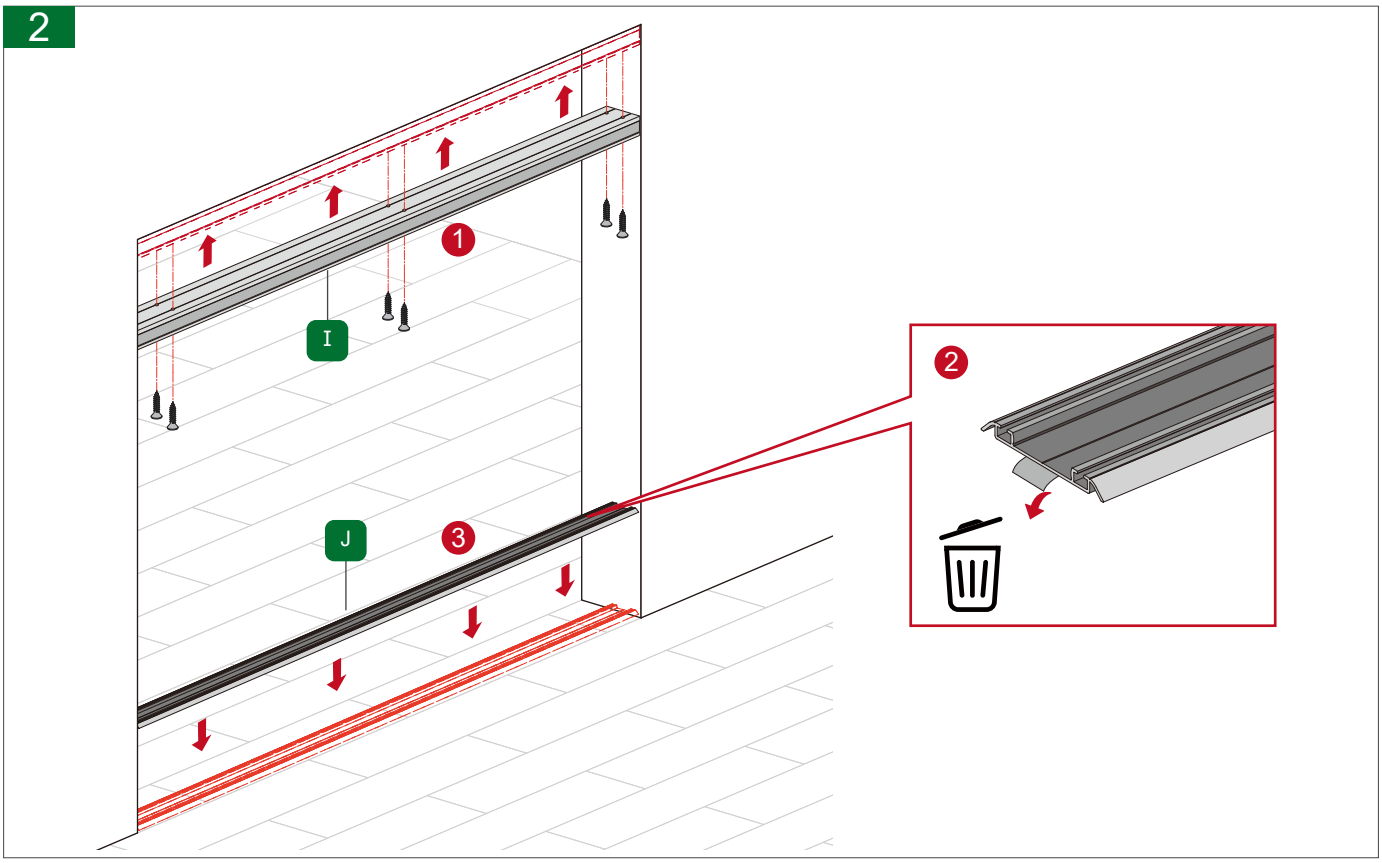
1
I
J
3
2

3

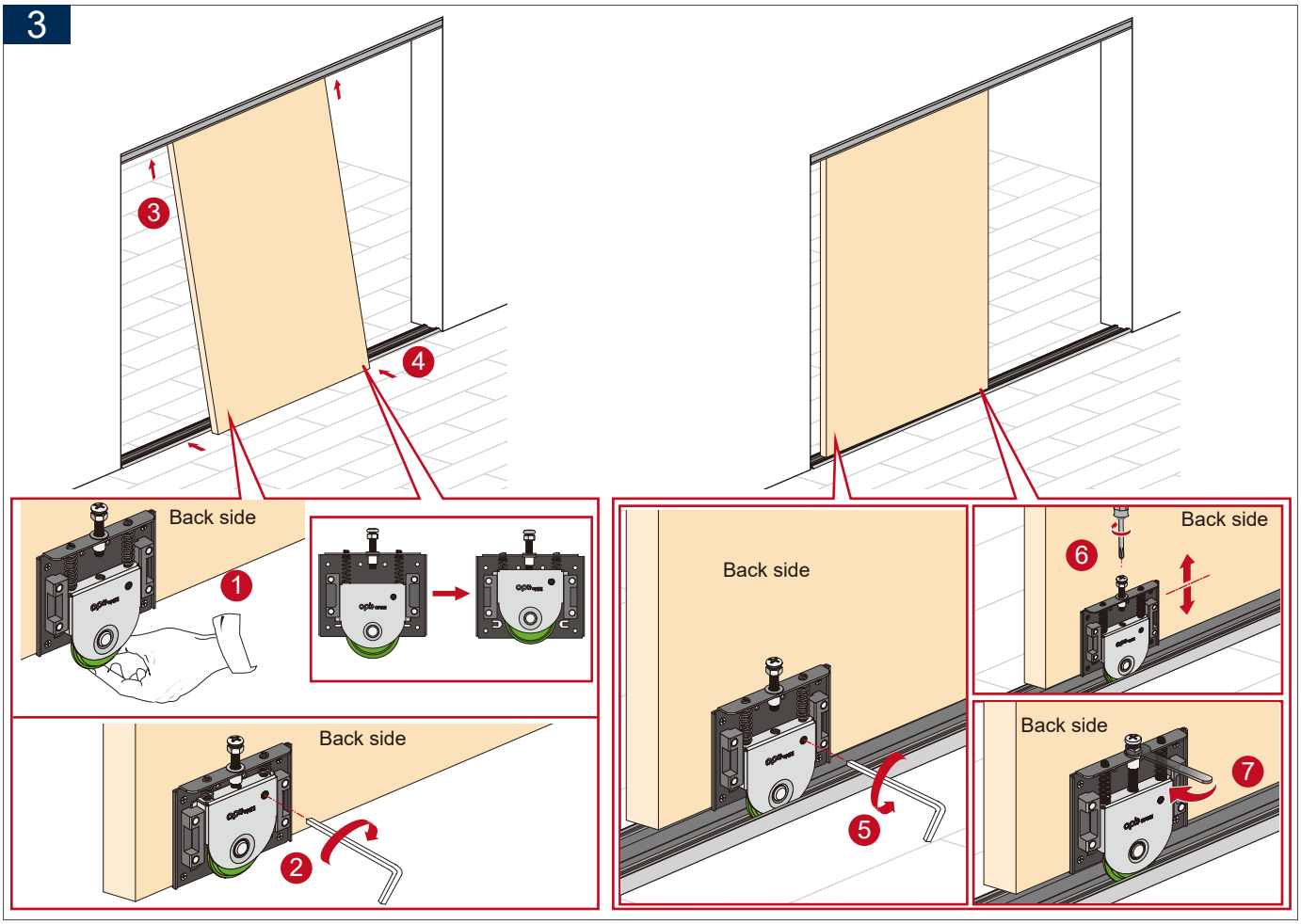
3
4
Back side
1
Back side
2
Back side
5
Back side
6
Back side
7

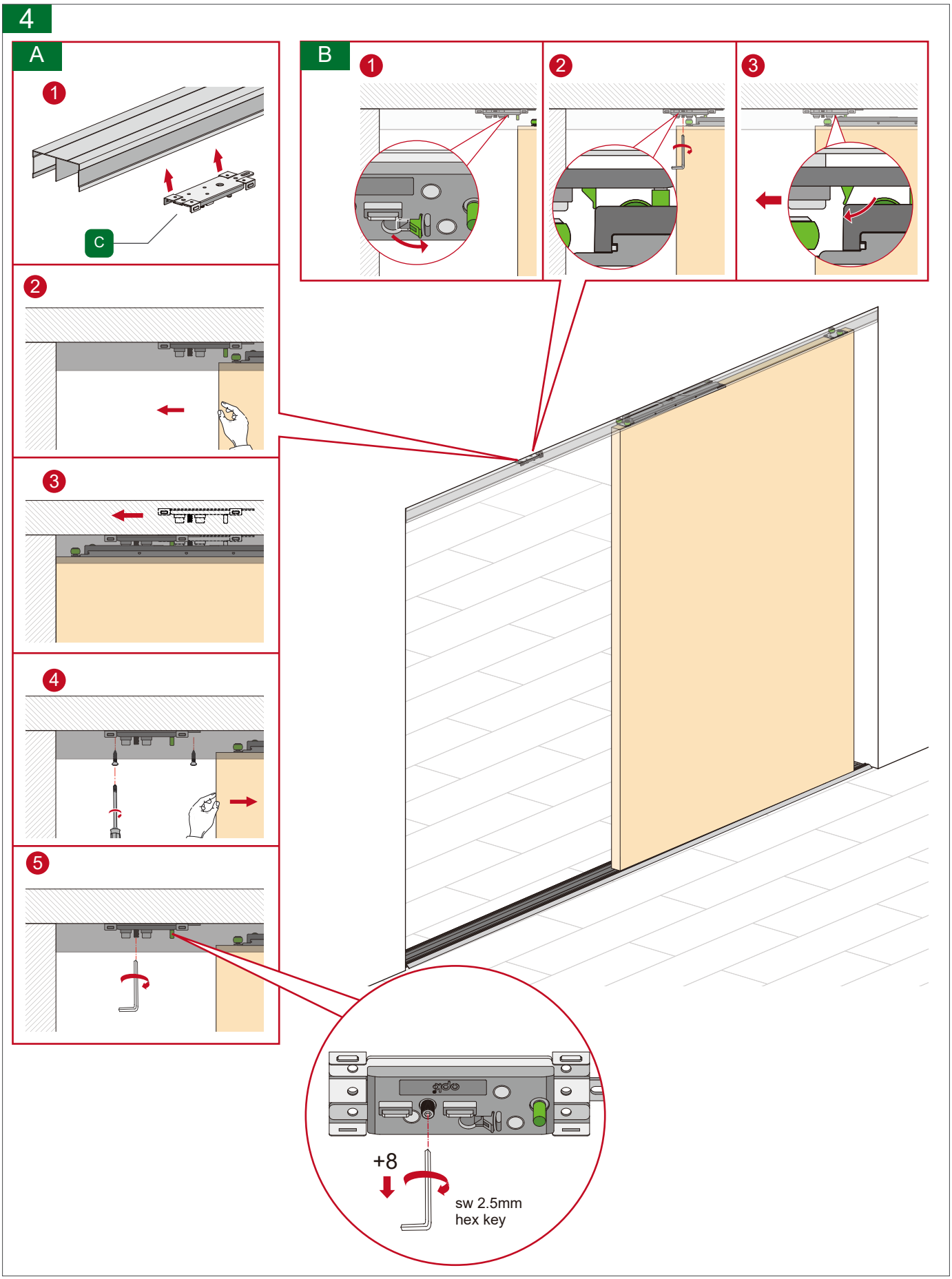
4
A
1
C
2
3
4
5
B
1
2
3
+8
sw 2.5mm
hex key

5

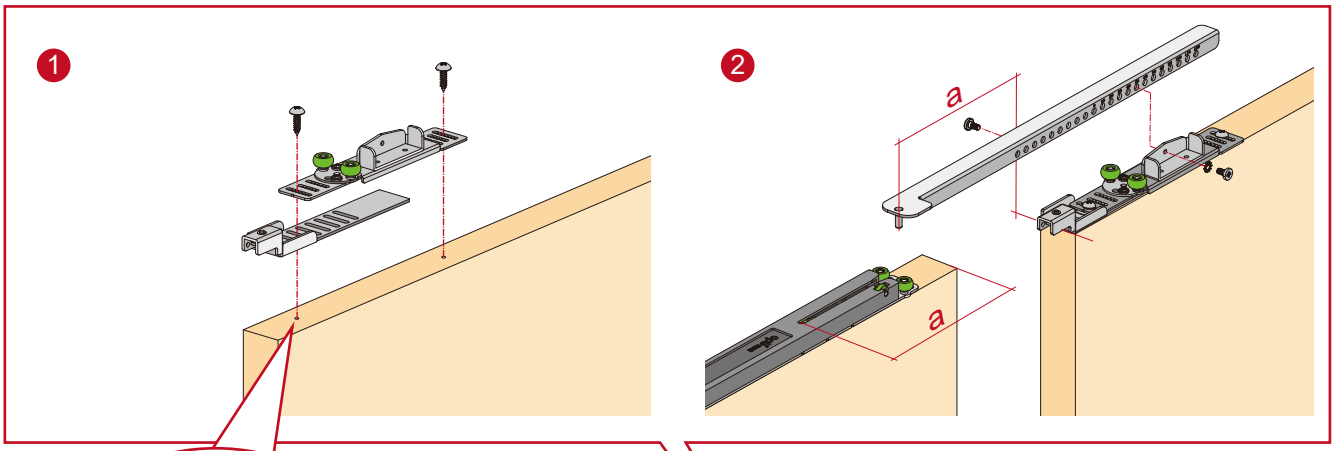
1
2
a
a

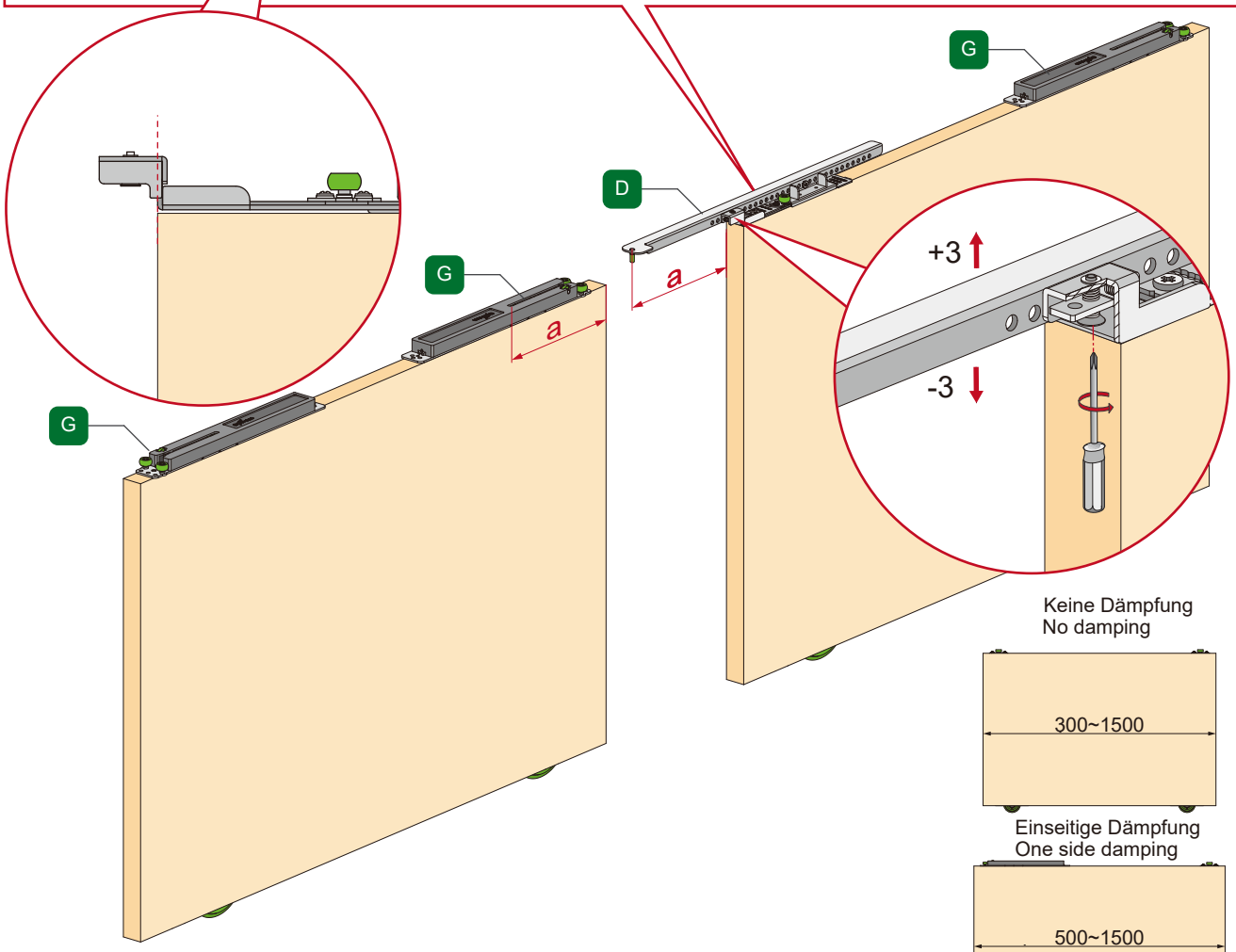
G
D
a
+3
-3
G
a
G

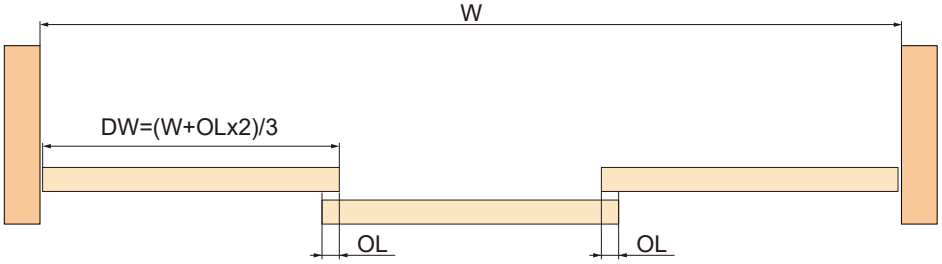
W
DW=(W+OLx2)/3
OL
OL

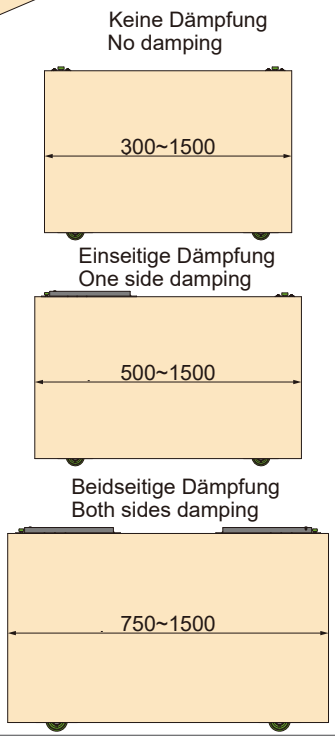
Keine Dämpfung
No damping
300~1500
Einseitige Dämpfung
One side damping
500~1500
Beidseitige Dämpfung
Both sides damping
750~1500
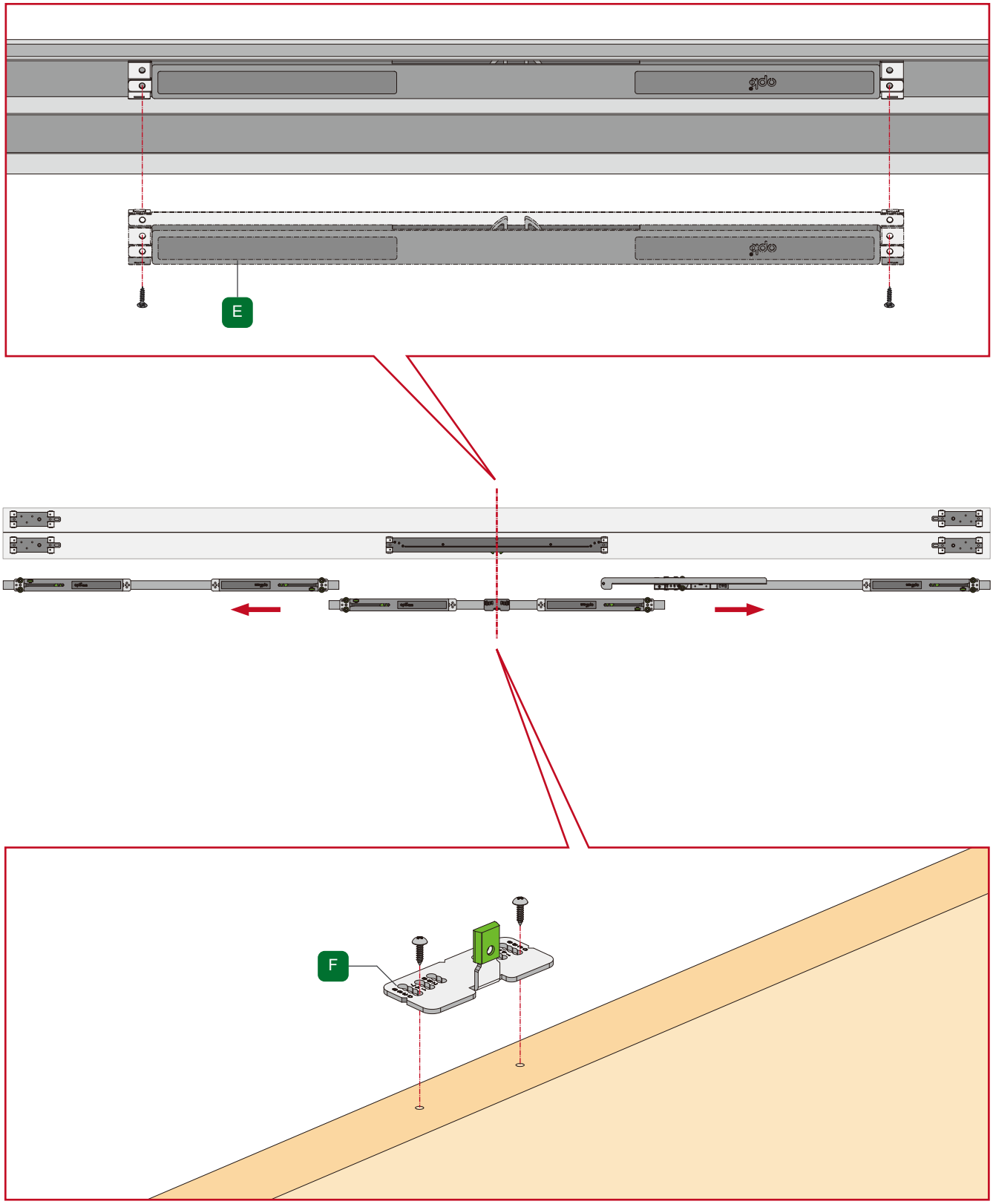
6