FULTERER PERFECT SECURITY

Fulterer

Electronic Locking Systems

Functions:

- Reliable function through up to 25 mm of non-conductive material
- Minimum of 25,000 latch openings per battery
- 50 different keys can be programed per lock
- Simple to install
- Card based programming. No PC or electronics required

	ITEM	PAGE
SOLO	**FPS SOLO SET 1**	6
	FPS SOLO SET 2 (Sliding)	7
	FPS SOLO SET 3 (Gym)	7
	FPS SOLO SET 4 (Alarm)	8
	SOLO Installation Options	8
	Latches	9
	RFID Cards	10
	Accessories	11
	Glass kit	12
	Additional components	12
	FPS PK Programming Card	13-14
	Software Features	14-15
	FPS 10-Combination Lock	16
DUO	**FPS DUO R (Bolt)**	17
	FPS DUO S (Sliding Lock)	18
	FPS DUO F (Latch)	19
	FPS DUO T (Push Button)	19
OTHERS	**FPS BEETLE**	20
	FPS RELAY	21
	FPS SOLO 13	21

Fulterer

Electronic Locking Systems

Electronic locks for display cases, lockers and sliding doors

This small intelligent electronic cabinet lock has a wide range of uses. Based on a proxy system, up to 50 keys (e-cards or chips) can be activated for each lock. This flexible system is ideal for:

- Hospitals (each patient has their own key)
- Shops (cabinets, display-cases)
- Household (private areas, child safety)
- Gyms, schools

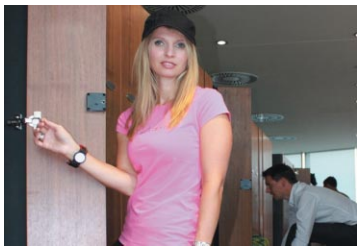

Fulterer

FPS SOLO – the invisible furniture lock

FPS SOLO – the invisible furniture lock

The new generation of "SOLO" electronic furniture locks proves that furniture locks can be both invisible and simple to operate, too!

The SOLO lock is attached to the inside or rear of a cabinet, for example and the RFID chip opens the lock through up to 25mm of wood or glass. With up to 25,000 cycles per battery, the furniture lock can be opened more than nine times a day for over 10 years.

Based on the internal chip system, you can program the lock very easily without a pc or software, just by using a programming card. Based on a proxy system up to 50 keys (e-cards or chips) can be activated for each lock.

FPS SOLO Furniture lock - features:

- Reliable function through up to 25 mm of non-conductive material
- Minimum of 25,000 latch openings per battery
- 50 different keys can be programmed per lock
- Easy installation

FPS SOLO SET 1

This set is suitable for fast and easy locking of furniture drawers, chest and cabinet doors. The user card will operate successfully through up to 25mm (.98 in.) wood thickness.

This set includes:

- SOLO lock
- Battery
- Two identical user cards
- Standard Pusher Latch

Item	W x H x D		Order No.
	mm	in.	
FPS SOLO SET 1	60 x 60 x 22	2.36 x 2.36 x .87	**0031900**
Packing Unit: **1 set**			

Complete this set with a programming card which enables you to choose which key has access to which lock.

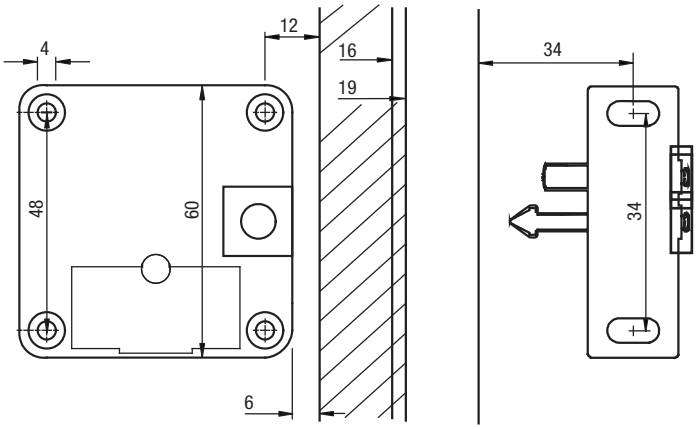

FPS SOLO SET 2 (Sliding)

This set makes it easy to lock and unlock all kind of sliding doors.
Also it's suitable for display cases on which the lock itself is mounted on the frame.
The user card will operate successfully through up to 25mm (.98 in.) wood thickness.

This set includes:

- SOLO lock
- Battery
- Two identical user cards
- Front locking device

Item	W x H x D		Order No.
	mm	in.	
FPS SOLO SET 2 (Sliding)	60 x 60 x 22	2.36 x 2.36 x .87	**0031901**
Packing Unit: **1 set**			

Complete this set with a programming card which enables you to choose which key has access to which lock.

FPS SOLO SET 3 (Gym)

Free address - Lock remains open until locked by user. After opening, the code is erased and another user can lock the locker. This free address function is perfect for indoor swimming pools, gyms, lockers, etc.. The user card will operate successfully through up to 25mm (.98 in.) wood thickness.

Advantages:

- Stand alone solution – no wiring necessary
- Can be installed on existing cabinets
- More than 30,000 cycles per battery
- Low battery alarm and lock remains open when battery is weak
- No PC and no software required
- Invisible from the outside, works through 20mm (0.79 in.) wood thickness.

This set includes:

- SOLO lock
- Battery
- One key-wristband
- Standard Pusher Latch

Item	W x H x D		Order No.
	mm	in.	
FPS SOLO SET 3 (Gym)	60 x 60 x 22	2.36 x 2.36 x .87	**0031902**
Packing Unit: **1 set**			

Complete this set with a programming card to override lock function.

Procedure / Function / Features

1. Choose a vacant locker
2. Close the door and lock using the RFID wristband or key card
3. The locker is now locked and can only be opened again using the same wristband or key card.
4. Hold the wristband / key card onto the lock again
5. The locker door will open automatically
6. The programming card can open occupied lockers.
   When the programming card is used, previously used wristbands or key cards will no longer have access.
7. More than one locker can be occupied using one key.

FPS SOLO SET 4 (Alarm)

Also available with integrated timed alarm function for added security.
After 25 seconds an alarm will sound if lock is still open.

Suitable for:

- Store display cases
- Store drawers
- Medicine cabinets
- Office furniture with confidential documents

This set includes:

- SOLO lock
- Battery
- Two identical user cards
- Standard Pusher Latch
- Integrated alarm

Item	W x H x D		Order No.
	mm	in.	
FPS SOLO SET 4 (Alarm)	60 x 60 x 22	2.36 x 2.36 x .87	**0031903**
Packing Unit: **1 set**			

Complete this set with a programming card which enables you to choose which key has access to which lock.

SOLO Installation Options

The SOLO lock can be installed in any furniture door or drawer.
Available for drawers and doors as SOLO pusher latch, or sliding with the SOLO Front locking device.

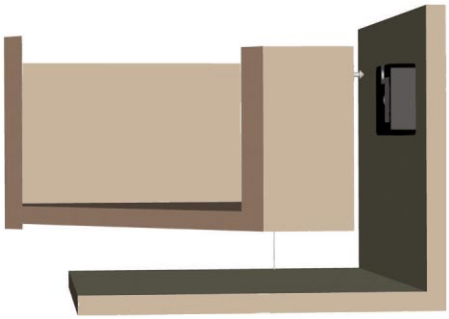

Drawer

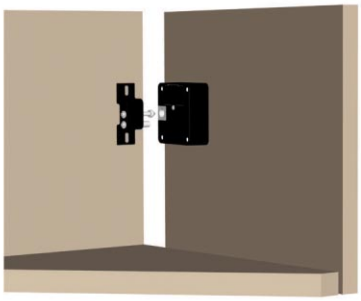

Door

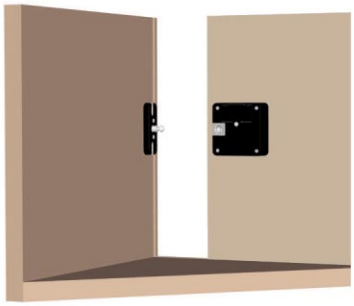

Sliding Door

Latches

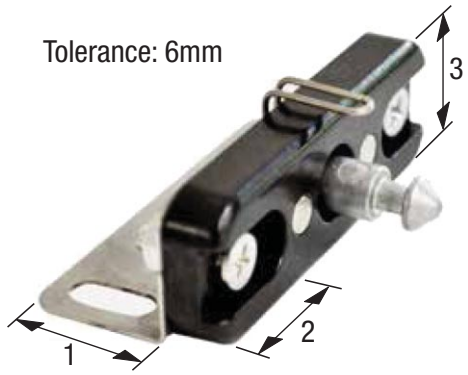

FPS 31600 3D Latch

Equipped with a mounting bracket and a spring this latch allows easy installation thanks to the oblong screw holes.
The mounting tolerances are within 6mm (.24 in.) and the spring is used as a pusher for a door. The wood mounting flange contains an extra hole to lock in the final position.

Item	Order No.
FPS 31600 3D Latch	**0031600**
Packing Unit: **1 piece**	

FPS 31604 Mini-locking device

Features:

- Compact Size
- Easy to install
- Screw provided
- No predetermined breaking point
- Tolerance +/- 1.0mm (.04 in.)

Item	Order No.
FPS 31604 Mini-locking device	**0031604**
Packing Unit: **1 piece**	

FPS 31601 Standard Pusher Latch

Features:
This locking device is made of ZAMAK, a robust zinc aluminum alloy and the predetermined breaking point is 35 kg. The integrated pusher will automatically open light drawers and cabinet doors.
The distance between the screw holes is identical to the lock, i.e. 48 mm. The slots allow for easy adjustment of the locking device. The pin is fixed with a plastic ring (predetermined breaking point 35 kg / 77 lbs.) and the pusher is fixed with a metal circular clip. The plastic ring can be exchanged for the metal circular clip in order to increase the predetermined breaking point. The flexible pin allows a tolerance +/- 1.0mm (.04 in.).

Item	Order No.
FPS 31601 Standard Pusher Latch	**0031601**
Packing Unit: **1 piece**	

FPS 31603 Front facing latch

This black metal locking device has a predetermined breaking point of 35 kg (77 lbs.). The flexible pin allows a tolerance of +/-3mm (.12 in.). Designed to work with sliding door applications.

Item	Order No.
FPS 31603 Front facing latch	**0031603**
Packing Unit: **1 piece**	

FPS 31602 200kg Pusher Latch

With a V2A stainless steel part, this locking device has a breaking point of approximately 200 kg (440.93 lbs.) The material is ZAMAK, a robust zinc aluminum alloy. The integrated pusher will automatically open light drawers and cabinet doors.
The distance between the screw holes is identical to the lock, i.e. 48 mm.
The slots allow for easy adjustment of the locking device.

Item	Order No.
FPS 31602 200kg Pusher Latch	**0031602**
Packing Unit: **1 piece**	

RFID Cards

FPS SC black Key Fob

This chip key is extremely small with a diameter of approximately 30mm (1.18 in.). It can be easily attached to a key ring. The maximum range is 20mm (.79 in.).

Item	Order No.
FPS SC black Key Fob	**0031500**
Packing Unit: **1 piece**	

FPS WB 1 Black wristband

The key is attached to a wristband so no pockets are required to keep the key. Excellent choice for gym/fitness centers. The maximum range is 20mm (.79 in.).

Item	Order No.
FPS WB 1	**0031530**
Packing Unit: **1 piece**	

FPS SK LR Standard User Card

This is a RFID transponder which is coordinated with the lock (125 kHz frequency range). The range is approximately 25mm (.98 in.) through wood or glass. Custom printed cards on request.

Item	Order No.
FPS SK LR Standard User Card	**0031510**
Packing Unit: **1 piece**	

FPS SK HR SET Standard Cards

This set comes with two identical cards. Use this set if you want to delete a key that has been lost or stolen or whenever you want to have a copy of your master key or programming card.

Item	Order No.
FPS SK HR SET Standard Cards	**0031521**
Packing Unit: **1 piece**	

FPS SK HR Long Range Programming Card

This card can be used either as a key or as a programming card. The range is at least 40mm. (1.58 in.)

Item	Order No.
FPS SK HR Long Range Programming Card	**0031520**
Packing Unit: **1 piece**	

Accessories

FPS 31750 Battery

The 3 volt lithium battery has life-span of 10 years and enough power to open the lock more than 30,000 times. When the battery starts to run low the lock will no longer lock and a continuous tone will sound for 15 seconds.

Item	Order No.
FPS 31750 Battery	**0031750**
Packing Unit: **1 piece**	

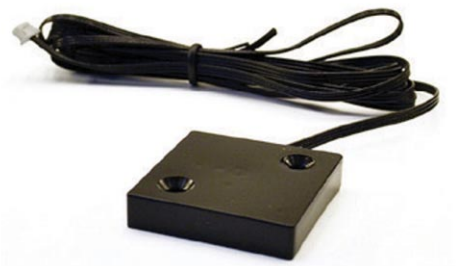

FPS 31700 Antenna

This flat external antenna is equipped with a 1.5m (5 ft.) connecting cable with a plug which can be plugged directly into the lock. The flat external antenna is used whenever the distance from the key is greater than 25mm (.98 in.) or if the lock is fixed onto a rear panel.

Item	Order No.
FPS 31700 Antenna	**0031700**
Packing Unit: **1 piece**	

FPS 31741 AC Plug

This power supply is used when the location of the lock makes replacing the batteries difficult or an external power supply is preferred.
The cable is 1.5m (5 ft.) long and can be plugged directly into the lock. Each converter can supply power to a maximum of 5 locks. Please note: Never use transformers and batteries at the same time. Batteries will run out of charge very quickly and weak batteries will not activate alarm signals.

Item	Order No.
FPS 31741 AC Plug	**0031741**
Packing Unit: **1 piece**	

FPS 31720 / FPS 31721 Connecting Cables

These connecting cables are used to connect locks. When ever the “group mode” is used, these cables will send the “open” signal from one lock to another.

Item	Length	Order No.
FPS 31720 Connecting Cable (1.5m)	1.5 m (5 ft.)	**0031720**
FPS 31721 Connecting Cable (2.5m)	2.5 m (8.2 ft.)	**0031721**
Packing Unit: **1 piece**		

FPS 31800 Spacer plate

A square shaped spacer plate to prevent cables from being crushed against the mounting surface.

Item	Dimensions	Order No.
FPS 31800 Spacer plate	60 x 60 x 5mm (2.36 x 2.36 x .20 in.)	**0031800**
Packing Unit: **1 piece**		

Glass Kit

FPS 31810 Glass Kit for Solo

This set consists of a plate for the lock, black foil and screws. The double-sided adhesive tape will hold up to 25 kg or 45 kg (55lbs. or 99lbs.), depending on the direction of pull.

Item	Order No.
FPS 31810 Glass Kit for Solo	**0031810**
Packing Unit: **1 set**	

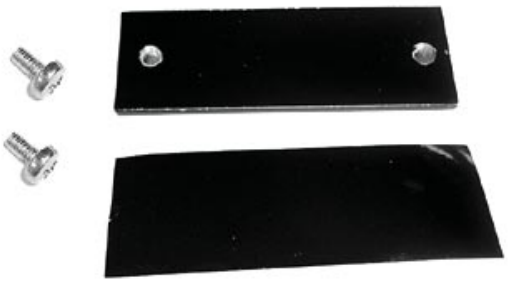

FPS 31811 Glass Kit for Latches

This set consists of a plate, black foil and 2 sets of corresponding screws for the locking devices FPS 31601, FPS 31602 and FPS 31603.

Item	Order No.
FPS 31811 Glass Kit for Latches	**0031811**
Packing Unit: **1 set**	

How to use the assembly kits:
spray water onto the area where the lock and locking device will be installed. Remove the protective backing from the black foil and place the foil in the correct position. Use a credit card or key card as a squeegee to remove the water from underneath the foil by sweeping the card firmly from the center to the sides. This will enable bubble-free installation.

FPS SOLO additional components

FPS SOLO

- Reliable function through up to 25 mm of non-conductive material
- Minimum of 25,000 latch openings per battery
- 50 different keys can be programmed per lock
- Easy installation
- Installation screws included

Item	Order No.
FPS SOLO	**0031000**
Packing Unit: **1 piece**	

FPS SOLO S Sub-unit

From the outside, this SOLO Sub-unit lock is identical to the standard SOLO lock but without a RFID reader. If you connect this lock to a SOLO lock, this lock will open and close at the same time as the SOLO lock. Using the three plugs, one SOLO Sub-unit can be connected to another or an additional external power supply can be attached. The extension cable is included.

Item	Order No.
FPS SOLO S Sub-unit	**0031020**
Packing Unit: **1 piece**	

FPS PK Programming Card

This programming card can be used to grant or deny access as well as to change the software settings. Only one programming card is necessary to operate multiple locks. In a shopping mall for example one programming card can operate 1,000 locks. The programming card can be assigned to a lock by pressing the button on the rear side and then holding the programming card on the lock within 3 seconds.

Item	Order No.
FPS PK (Programming Card)	**0031550**
Packing Unit: **1 piece**	

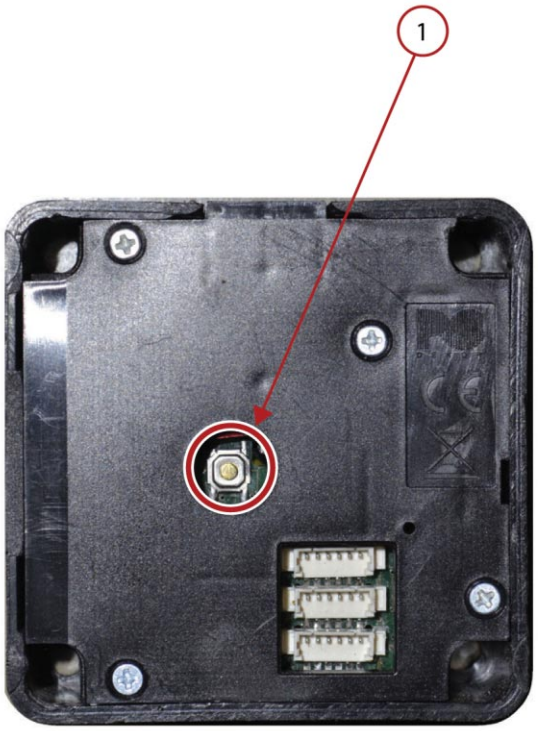

Programming instructions

Activating the programming card

1. Press the push-button on the rear side 1
2. The lock will make a ticking sound (signal).
   Hold the programming card on the lock within 3 seconds of hearing this signal.
3. Two short ascending tones will confirm that the programming card has been saved successfully.

Initializing a key

1. Please place the programming card onto the lock.
2. The lock will make a ticking sound (signal).
   Place the key card or chip key onto the lock within 3 seconds of hearing this signal.
3. Two short ascending tones will confirm that initialization was successful.
4. The lock can now be opened using the key card or the chip key.
   Tip: The maximum for keys per lock is 50.

Deleting the key card or chip key

1. Please place the programming card onto the lock.
2. The lock will make a ticking sound (signal).
   Place the key card or chip key onto the lock within 3 seconds of hearing this signal.
3. Two short ascending tones will confirm that deletion was successful.

Delete all keys

To delete all keys at once, place the programming card onto the lock for several seconds. Deleting all user keys does not affect any programming functions added to the lock.

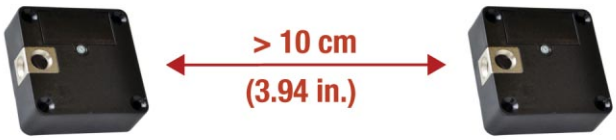

FPS PK Programming Card

This programming card can be used to grant or deny access as well as to change the software settings. Only one programming card is necessary to operate multiple locks. In a shopping mall for example one programming card can operate 1,000 locks. The programming card can be assigned to a lock by pressing the button on the rear side and then holding the programming card on the lock within 3 seconds.

See page 13 for programing insructions.

Item	Order No.
FPS PK (Programming Card)	**0031550**
Packing Unit: **1 piece**	

Software Features

FPS 31565 ALARM SET

This software update will activate the integrated alarm and there will be a beeping sound after 25 seconds if the door is not closed again. This is very useful in retail shops to remind the shop assistant to close the door. The alarm can only be deactivated with a key or by closing the cabinet.

Programming instructions:
1. place the programming card
2. place this card
3. a signal appears - OK

FPS PK Programming Card is required

Item	Order No.
FPS 31565 ALARM	**0031565**
Packing Unit: **1 set**	

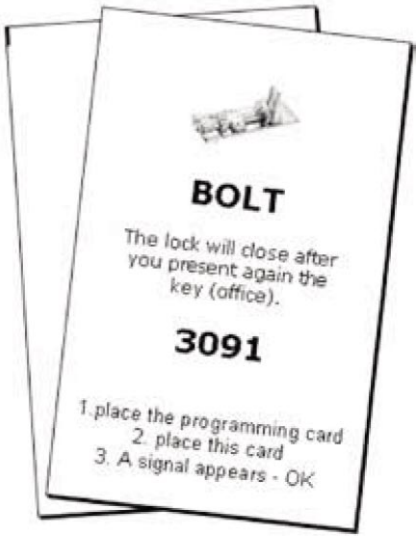

FPS 31567 BOLT SET

This feature will deactivate the automatic locking mode and only lock when the key (or chip key) is placed onto the lock again. This is useful for example, if doors need to be opened in the morning and locked again in the evening (office drawers, cabinet doors etc.). This locking feature may not be used in combination with the battery mode.

Programming instructions:
1. place the programming card
2. place this card
3. a signal appears - OK

FPS PK Programming Card is required

Item	Order No.
FPS 31567 BOLT	**0031567**
Packing Unit: **1 set**	

Software Features

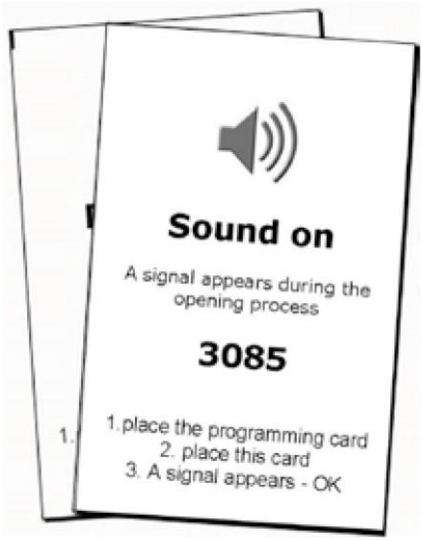

FPS 31563 SOUND

The signal transmitted upon opening, closing and programming is hereby disabled. All sounds made by the lock are deactivated.

Programming instructions:
1. place the programming card
2. place this card
3. a signal appears - OK

FPS PK Programming Card is required

Item	Order No.
FPS 31563 SOUND	**0031563**
Packing Unit: **1 set**	

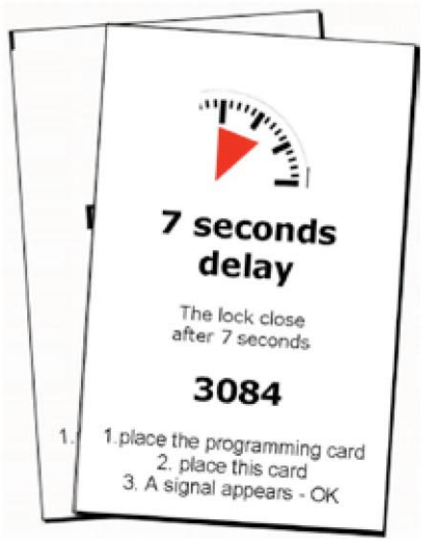

FPS 31561 SET 7 Second Delay

With this card you can change the delay of the lock before it closes automatically from 3 to 7 seconds.

Programming instructions:
1. place the programming card
2. place this card
3. a signal appears - OK

FPS PK Programming Card is required

Item	Order No.
FPS 31561 SET 7 Second Delay	**0031561**
Packing Unit: **1 set**	

FPS 31560 GYM SET

Free address - User can decide which open furniture he will occupy.
Lock will remain open and any card will lock it. When lock is opened, the lock will reset to accept any key for locking.

Programming instructions:
1. place the programming card
2. place this card
3. a signal appears - OK

FPS PK Programming Card is required

Item	Order No.
FPS 31560 GYM SET	**0031560**
Packing Unit: **1 set**	

FPS 10-Combination Lock

10Ten-Combination Lock

The electronic combination lock 10Ten is suitable for a variety of applications such as:

- Fitness centres
- Clubs
- Department stores (safes)

The keypad is fastened directly to the lock underneath. The 7cm long cable enables easy installation. The built-in lithium battery guarantees a maximum life-span of 10 years. It can be expected to last 5 years with everyday use. The battery is checked during the opening process and when the battery is running low the lock will remain open, an alarm will go off and the lock cannot be used again until the battery has been replaced.

Emergency opening

There is a master code on the rear-side of the lock (screwed in place and therefore not visible). A caretaker, for example, can open a locker using this code. An emergency opening will cause the previously entered code to be deleted.

The package includes:

- the keypad 58 x 58 x 4mm (2.28 x 2.28 x .16 in.)
- locking device
- Lock assembly with Standard Pusher Latch
- Battery with a maximum life-span of 10 years

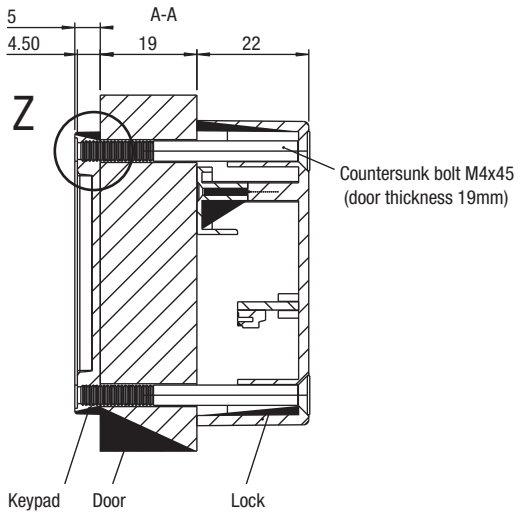

Side View

FPS TEN O (Public)

This version is for use in public institutions. The lock is open in idle mode. The user puts his/her clothes in an open compartment/locker and locks it by entering his/her individual code.

The lock is now locked and can only be opened using the previously entered code. As soon as the lock has been opened, the code is deleted and the compartment/locker can be re-used.

There is a master code on the rear-side of the lock (screwed in place). A caretaker, for example can open a locker using this code. An emergency opening will cause the previously entered code to be deleted.

Item	W x H x D		Order No.
	mm	in.	
FPS TEN O (Public)	60 x 60 x 22	2.36 x 2.36 x .87	**0031921**
Packing Unit: **1 set**			

FPS TEN P (Private)

After installing the battery a personal code can be entered. The LED lights up briefly and the code is entered once again and then confirmed.
The lock is locked in idle mode. After entering the correct code the lock opens for 3 seconds and then closes again automatically.

Item	W x H x D		Order No.
	mm	in.	
FPS TEN P (Private)	60 x 60 x 22	2.36 x 2.36 x .87	**0031920**
Packing Unit: **1 set**			

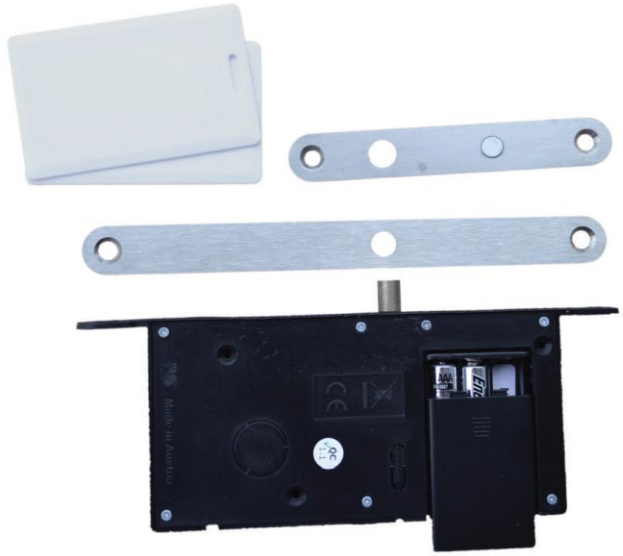

FPS DUO R (Bolt)

This lock does not have a latch and only opens or locks using the respective card or an external switch.

Features:

- works in a 50mm door
- emergency opening feature
- external opening (switch/relay)
- closed status via LED signal
- ~ 20,000 openings per battery set
- The sensor will check the closed position
- Lock the door using the card
- Locking the door is only possible if the door is closed.

This set includes:

- DUO bolt lock
- Batteries
- locking device
- 2 identical programmed keys

Item	Order No.
FPS DUO R (Bolt)	**0031931**
Packing Unit: **1 set**	

Complete this set with a programming card which enables you to choose which key has access to which lock.

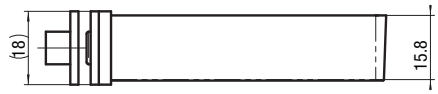

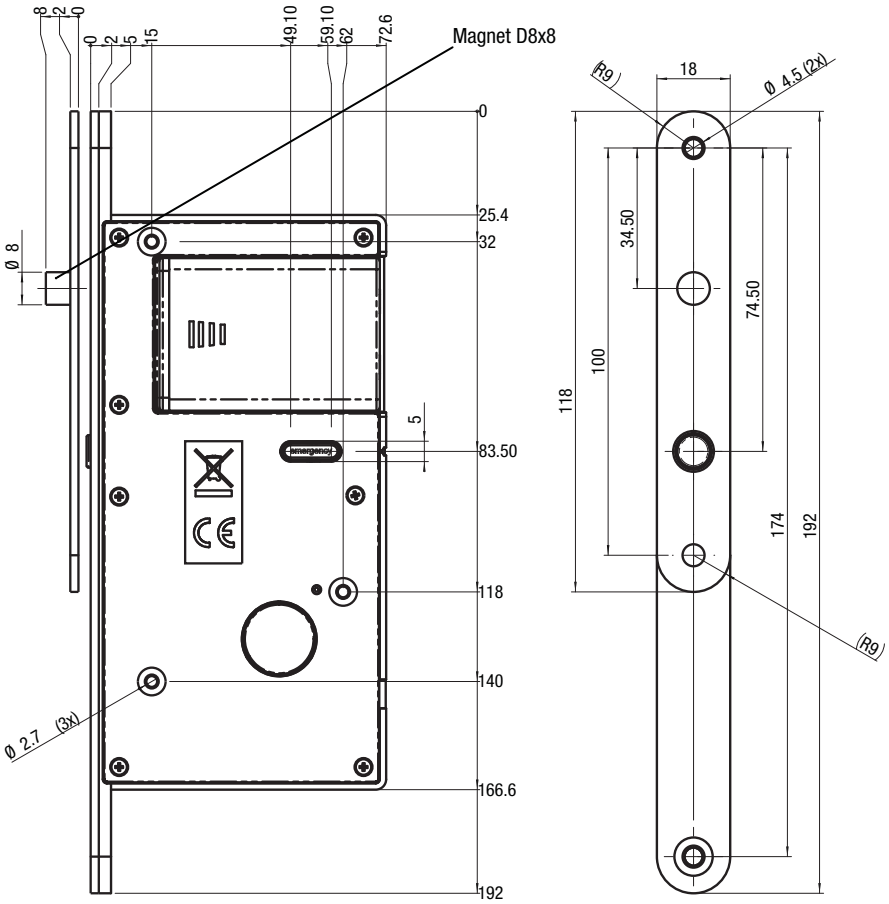

FPS DUO S (Sliding Lock)

This lock does not have a main bolt but has a locking mechanism for sliding latches.

Features:

- Open the lock with a card
- The lock will close within 3 seconds
- The door can be closed
- The latch will be fixed again in the lock
- The door is locked

This set includes:

- DUO sliding lock
- Batteries
- locking device (3068)
- 2 Identical Programmed Keys

Item	Order No.
FPS DUO S (Sliding Lock)	**0031932**
Packing Unit: **1 set**	

Complete this set with a programming card which enables you to choose which key has access to which lock.

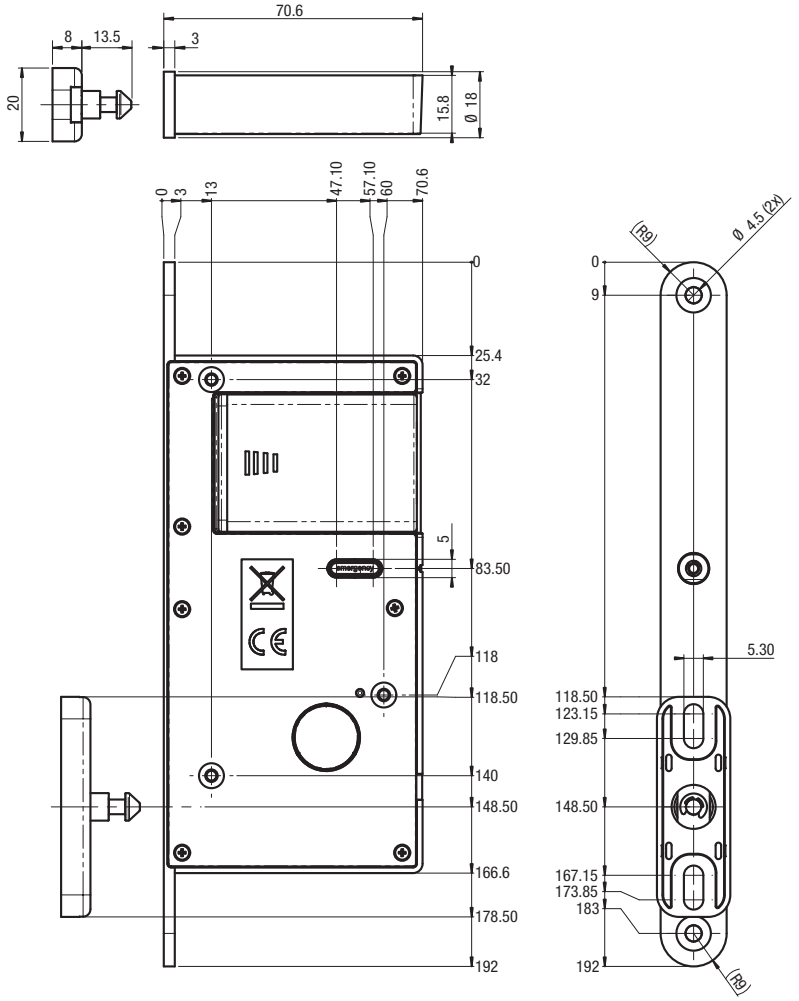

FPS DUO F (Latch)

This lock is equipped with a latch which automatically locks again after 3 seconds.

Features:

- works in a 50mm door
- emergency opening feature
- external opening (switch/relay)
- ~ 20,000 openings per battery set
- Open the door using a card
- The latch will lock after 3 seconds

This set includes:

- DUO latch lock
- Batteries
- 2 Identical programmed keys

Item	Order No.
FPS DUO F (Latch)	**0031930**
Packing Unit: **1 set**	

Complete this set with a programming card which enables you to choose which key has access to which lock.

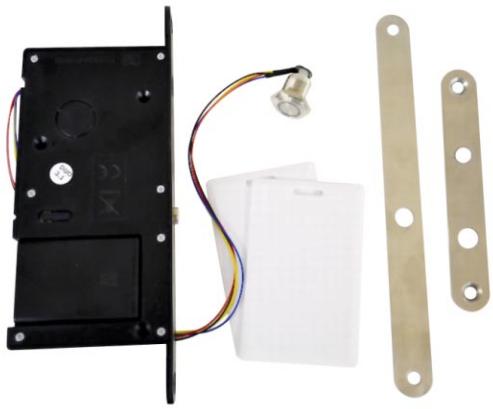

FPS DUO T (Push Button)

Designed for public restrooms, conference rooms or office doors.
In addition to the RFID properties, the door can be locked from the inside with an LED button.

Features:

- when closed, the LED flashes red
- The button and the RFID cards only work when the door is in the closed position

This set includes:

- DUO latch lock
- Batteries
- 2 Identical programmed keys

Item	Order No.
FPS DUO T (Push Button)	**0031933**
Packing Unit: **1 set**	

Complete this set with a programming card which enables you to choose which key has access to which lock.

FPS BEETLE

FPS BEETLE 00:

In combination with our furniture and door locks, you can use this beetle-0V version as a sub-unit lock. This beetle-0V has a 75cm (29.53 in.) cable which can be plugged directly into the lock. Either the Solo, keypad, or Duo locks can control this unit.

- 0.75m (29.53 in.) cable

Item	W x H x D		Order No.
	mm	in.	
FPS BEETLE 00	32 x 32 x 12	1.26 x 1.26 x .47	**0031040**
Packing Unit: **1 piece**			

Beetle - the smallest electrical lock worldwide

With these measurements: 40 x 40 x 12mm (1.58 x 1.58 x .47 in.) the beetle is one of the smallest locks available for:

- display cases
- cabinets
- sliding doors
- hinged doors

Features:

- small size
- robust metal case
- stainless steel look
- three-dimensional opening
- small, robust servo motor
- input signal 3V DC
- 0.75 m cable

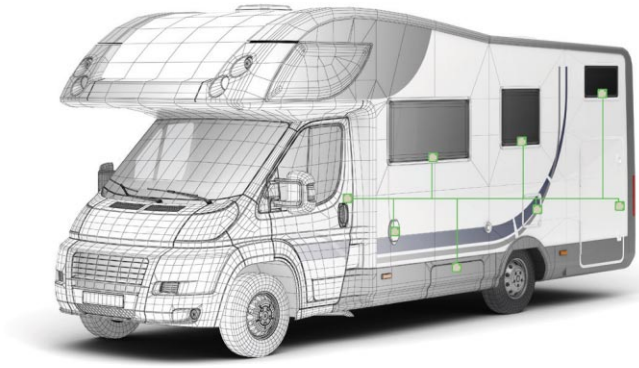

Application:

- cabinets
- drawers
- display cases
- sliding-doors

Item	W x H x D		Order No.
	mm	in.	
FPS BEETLE 03	32 x 32 x 12	1.26 x 1.26 x .47	**0031042**
Packing Unit: **1 piece**			

FPS BEETLE 12:

- input signal 12V DC
- 0.75m (29.53 in.) cable

Item	W x H x D		Order No.
	mm	in.	
FPS BEETLE 12	32 x 32 x 12	1.26 x 1.26 x .47	**0031041**
Packing Unit: **1 piece**			

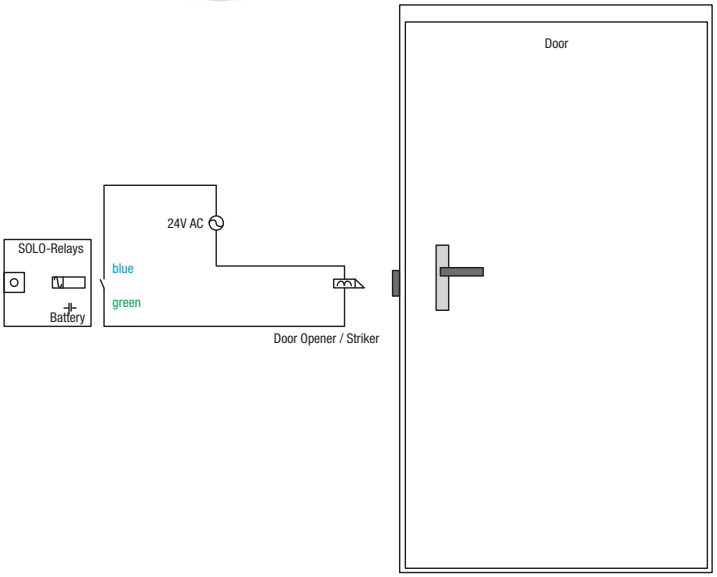

Complete this set with a programming card. This programming card enables you to choose which key has access to which relay.

FPS RELAY

SOLO-Relay: 125 kHz Access Control Unit

Based on the integrated access control, you can manage up to 50 different keys. For the programming, you need only a programming card.

Usages:

- turnstile
- elevator
- alarm-quit
- door opener/striker

The integrated relays will provide you with a potential-free contact.

Switched power:

- Current max: 1A
- Contact voltage AC nom: 125V
- Contact voltage DC nom: 30V

Switcher properties:
The relays will close when you place an active key.
After 3 seconds, the relays will open again.
Extensions:
Please combine this product with an external antenna , a power supply, RFID keys and a programming card.
This set includes:

- Case with the electronic
- Battery for more than 25,000 cycles / 5 years
- 2 active key cards

Item	Order No.
FPS RELAY	**0031760**
Packing Unit: **1 set**	

FPS SOLO 13

The new generation of SOLO13 electronic furniture locks proves that furniture locks can be both invisible and simple to operate, too.
Use any ISO 14443A transponder to open / close this lock and use any of these transponders as a programming card with following ranges:

- RFID card: 22 mm
- VISA / ATM Card: 15 mm

Features:

- Access control already included with up to 50 different users
- Offline lock without any wiring
- Battery life with 20,000 openings
- Maximum 2 year battery life

Options:

- Power supply 3051s (in a set with the lock)
- Door open alarm (Solo13-Alarm)
- Bolt usage (SOLO13-Bolt)

Item	W x H x D		Order No.
	mm	in.	
FPS SOLO 13	60 x 60 x 22	2.36 x 2.36 x .87	**0031100**
Packing Unit: **1 piece**			

publique 14001_2_6 Schliesssysteme - PS

Fulterer

FULTERER GMBH
Höchster Straße 11
Postfach 67
6890 Lustenau, AUSTRIA

T +43 5577 8130
F +43 5577 8130 - 129
info@fulterer.com
www.fulterer.com

FULTERER USA INC.
542 Townsend Avenue
High Point
NC 27263-4552, USA

T +1 336 431 - 4646
F +1 336 431 - 4620
info@fultererusa.com
www.fultererusa.com

FULTERER AG
Industriestrasse 35
9430 St. Margrethen,
SWITZERLAND

T +41 71 74761 - 61
F +41 71 74761 - 29
info@fulterer.com
www.fulterer.com