PRÄMETA

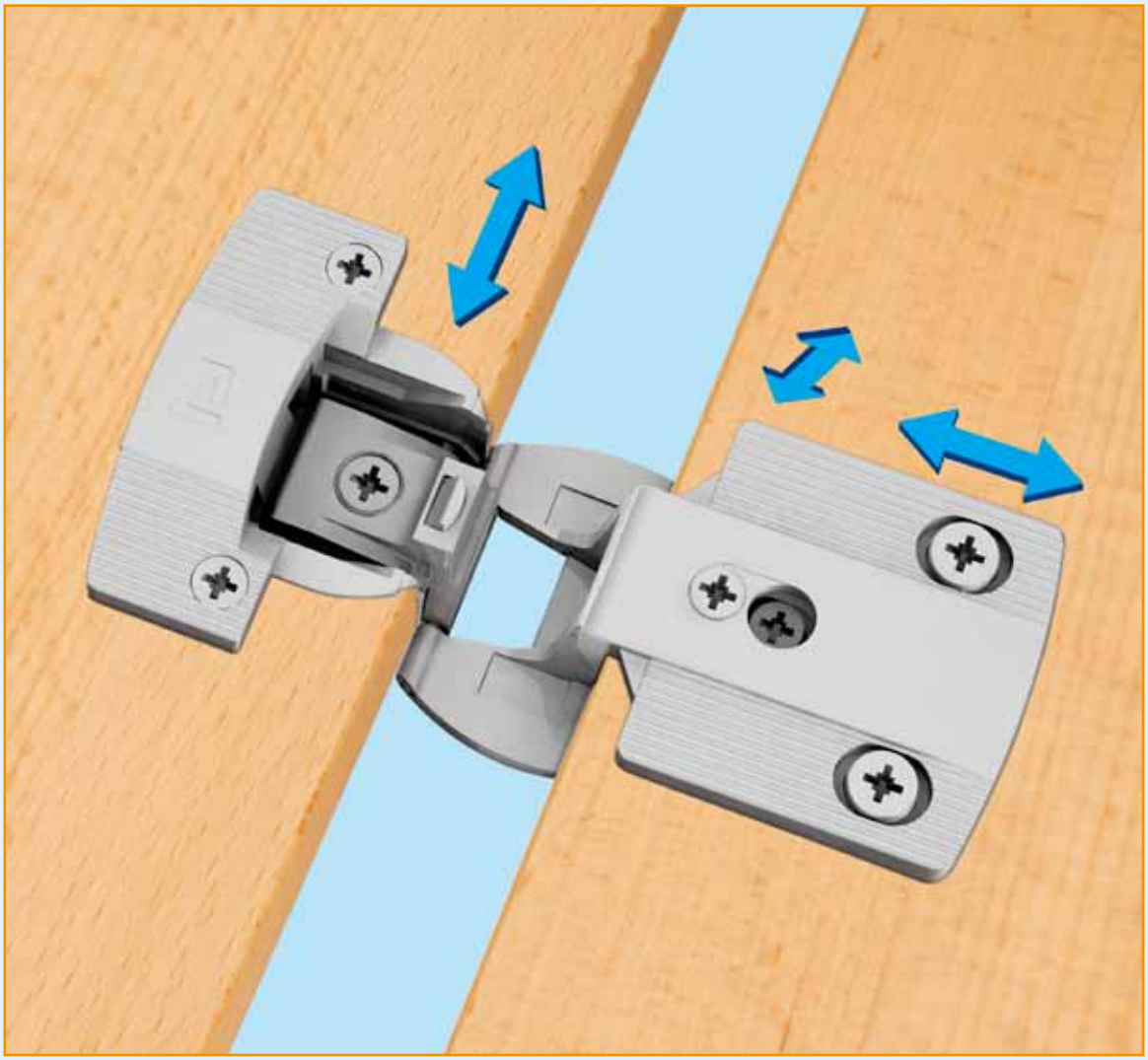

Institutional furniture hinges

Number of hinges per door

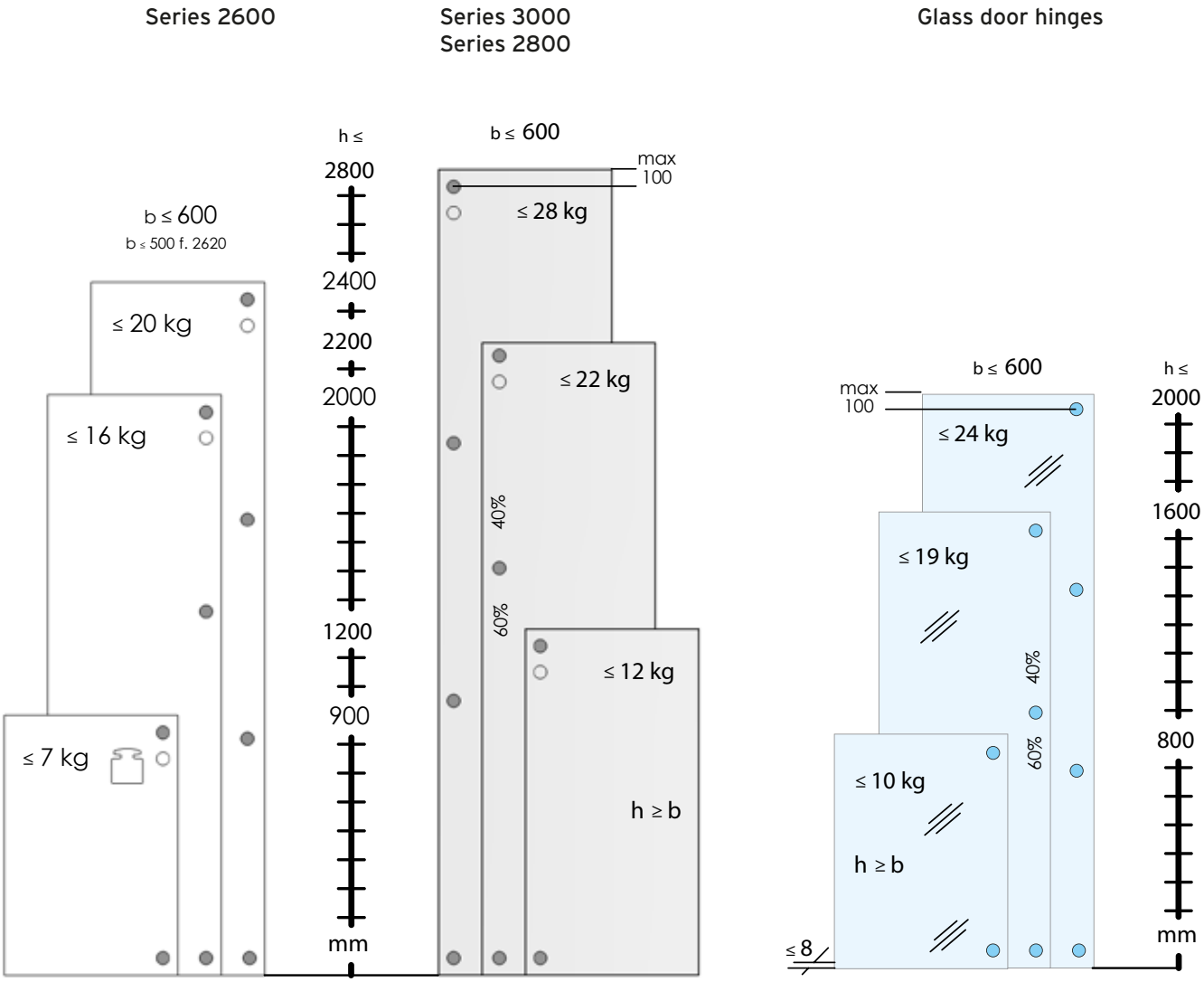

Single pivot hinges certified in accordance with ANSI Grade 1 and EN 15570 Level 3

		ANSI Grade 1 (Internationally the hardest standard for furniture hinges)	EN 15570 Level 3	EN 15570 Level 2
Durability test				
Door weight	kg	18	7	7
Number of cycles		100.000	80.000	40.000
Door sag	mm	0,76	3,0	3,0
Security test				
Additional weight	kg	72	30	20
Door sag	mm	0,76	No door drop	No door drop

Subject to technical modifications. Misprintings and other errors excepted from guarantee. • 04.13

PROGRAMME OVERSIGHT

Application					Type of application / max. opening angle			Application details			
Wood / Wood	HPL / HPL	Wood / HPL	Wood / Glass	Glass / Glass	Single hinge Single cabinets	Middle hinge Single cabinets + storage walls	Twin hinge Storage walls	Carcass / Door mm	Gap mm	Door overlay mm	Pages
●					270° 3-D			19 / 16 - 21	4	15	6 - 9
●						180°-240° 3-D	180° 3-D	19 / 16 - 21	6	6,5	6 - 9
●					270°			19 / 16 - 21	3	16	10 - 13
●					270°			19 / 16 - 21	4	15	10 - 13
●					270°			19 / 16 - 21	8	11	10 - 13
●						180° - 240°	180°	19 / 16 - 21	6	6,5	10 - 13
●						180° - 240°	180°	19 / 16 - 21	8	5,5	10 - 13
●						180° 3-D		≥16 / 16 - 21	3	inset	8 + 12
	●				270° 3-D			10 / 10 - 13	6	3,5	14 - 15
	●					180°-240° 3-D		13 / 10 - 13	6	3,5	14 - 15
	●				270° 3-D			13 / 10 - 13	6	7	14 - 15
		●				240° 3-D		19 / 10 - 13 (16)	6	7	14 - 15
		●			270° 3-D			19 / 10 - 13 (16)	6	13	14 - 15
	●					240°		10 / 10 - 13	6	2	16
	●					180° - 240°		13 / 10 - 13	6	3,5	16
	●						180°	13 / 10 - 13	6	3,5	16
			●			180° 3-D		≥16 / 5 - 8	3	inset	12
			●			230°		≥16 / 5 - 8	3	6 or 3	18 - 20
			●			180°		≥16 / 5 - 8	3	inset	18 - 20
			●			195°		≥16 / 5 - 10	3	inset	21 - 23
				●	260°			/ 5 - 8	3	6 or 3	19 - 20
				●		190°		/ 5 - 8	3	inset	19 - 20
				●		220°		/ 5 - 10	2	inset	21 - 23

Icon-legend		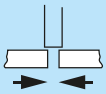	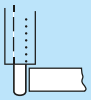				Colouring	STANDARD
C = clip mounting S = screw connecting	Type of application	Gap	Hinge- / Door overlay	Carcass / Door thickness	Max. opening	Packaging unit	N= mat nickel plated MH= brass plated S= black	certified EN 15570 Level 3 = EN certified ANSI Grad 1 = ANSI

SERIES 3000

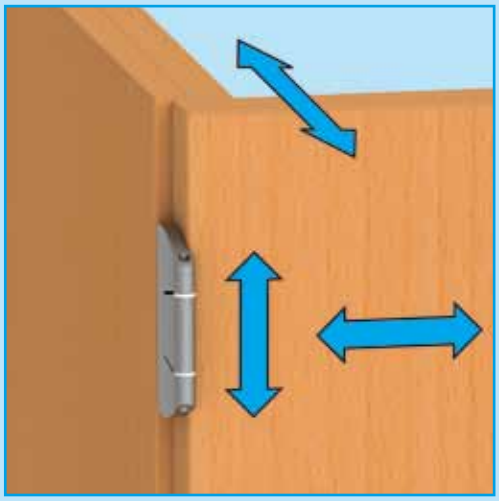

- Unique 3D adjustment
- Unique 3D institutional furniture hinge in accordance with ANSI/ BHMA Grade 1

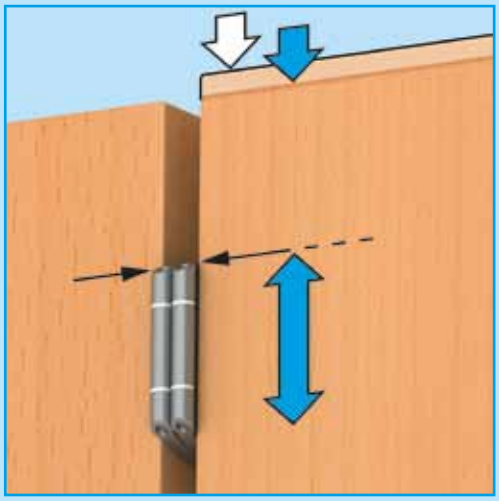

- Vertical adjustment in the door part
- Position of the knuckle remains unchanged, no misalignment of adjacent knuckles
- Repeatable vertical adjustment independently of the security screw
- Equally, separate adjustment in case of twin application

SERIES 2000

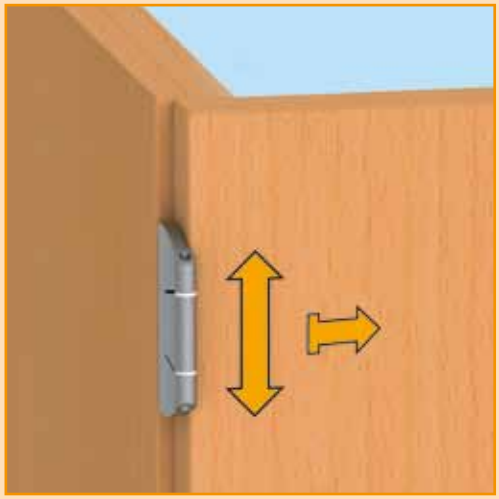

- Comfortable 2D adjustment

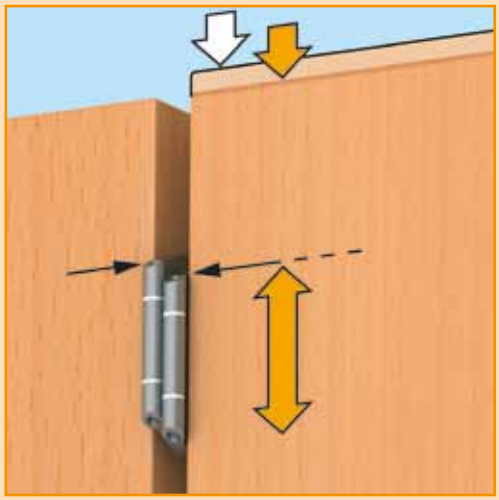

- Activatable vertical adjustment in the hinge arm

Subject to technical modifications. Misprintings and other errors excepted from guarantee. • 04.13

SERIES 3000

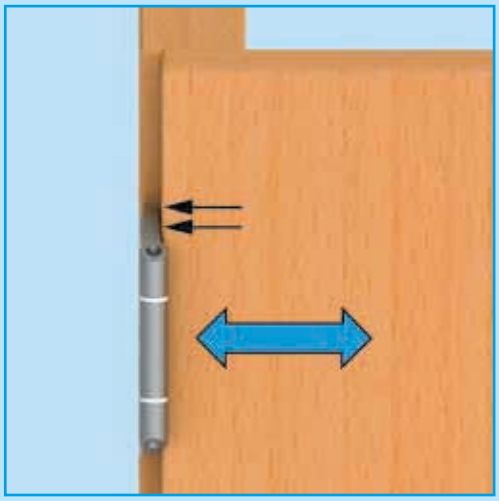

- Door overlay adjustment in both directions in the hinge arm
- No gap between knuckle und door

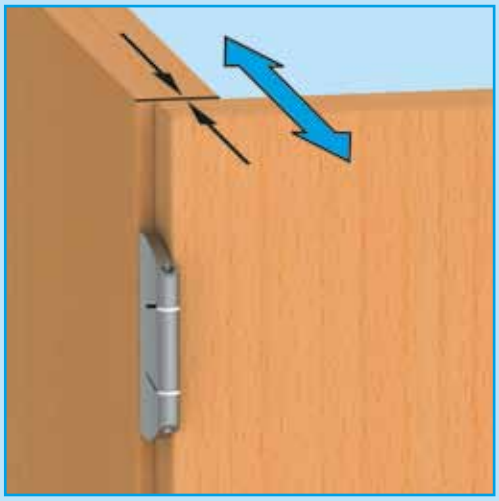

- Depth adjustment

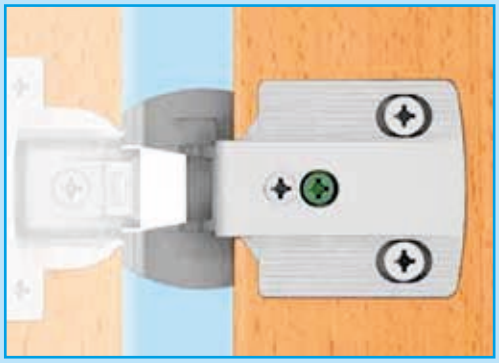

- Security screw to be mounted already in the factory
- Adjustment is not hindered

SERIES 2000

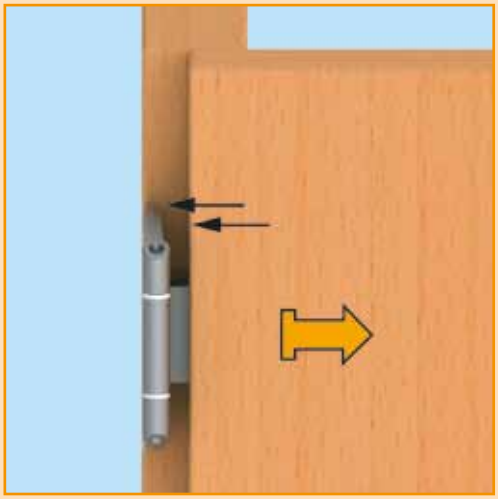

- Door overlay adjustment in the door part

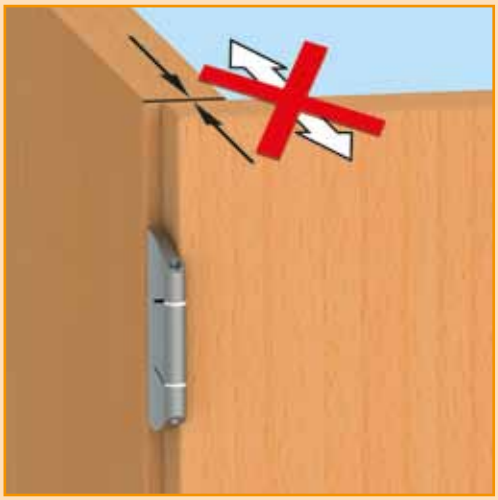

- Security screw to be mounted after adjustments

SERIES 3000

Technical information

- Visible 5 mm knuckle
- Clip mounting
- Vertical adjustment in the cup ± 2 mm, even in case of twin application each door is adjusted separately
- Door overlay adjustment in the hinge arm without gap between knuckle and door in both directions +1/−2 mm
- Depth adjustment ± 1 mm
- Security screw in the hinge arm to be mounted already in the factory
- Door thicknesses 16 - 21 mm (depending on the edge radius)
- Separate mounting of door part and hinge arm
- Expansion dowels with pre-mounted screws in the hinge arm
- Flat module friendly hinge arm
- With catch
- One cup for all models
- Cup rim cover and edge protection
- Zinc die cast, nickel matt plated

Accessories

Opening restrictor

- Can be continuously adjusted up to 120°
- Easy to be mounted at a later stage

to avoid damages caused by protrusion

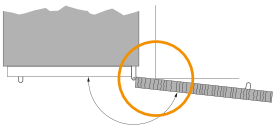

to avoid damages caused by **protruding handles**

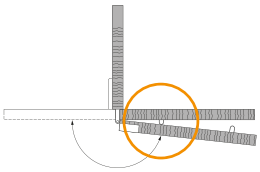

in case of **single cabinets** with half overlay (danger of handles being wedged in)

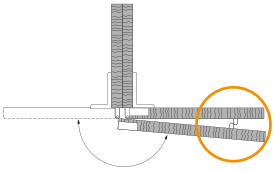

Better: choose flush application

Clothes guard

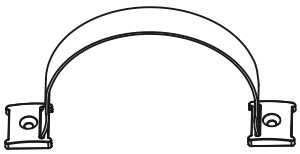

- Prevents any catch-in of clothes

2400	50
2450	100

Subject to technical modifications. Misprintings and other errors excepted from guarantee. • 04.13

SERIES 3000

Institutional furniture hinge

- Unique 3D adjustment
- Elegant design
- Outstanding stability and longevity
- Gap 4 mm resp. 6 mm for full, half and twin overlay applications
- Gap 3 mm for inset application
- All variants certified in accordance with ANSI
- Opening 270°

Drilling pattern door

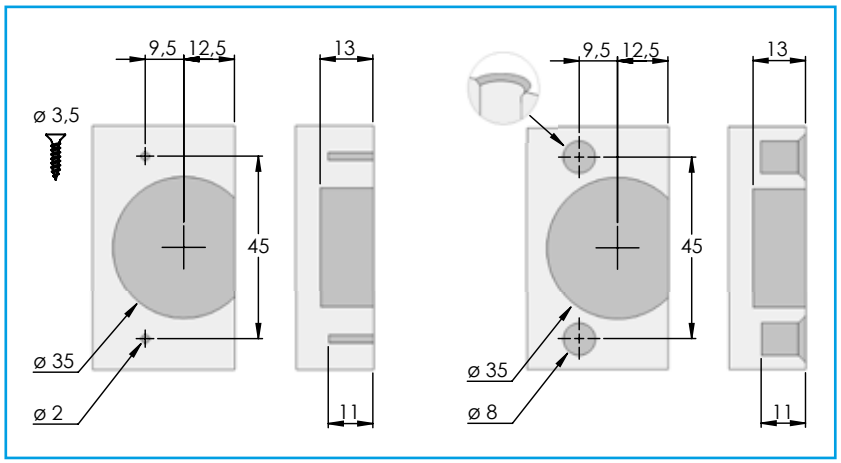

Drilling pattern carcass
for overlay doors

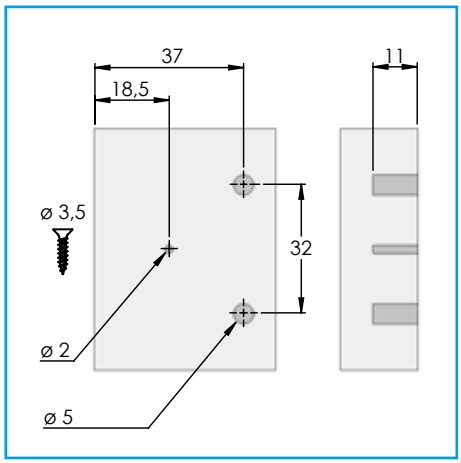

SERIES 3000

Inset doors

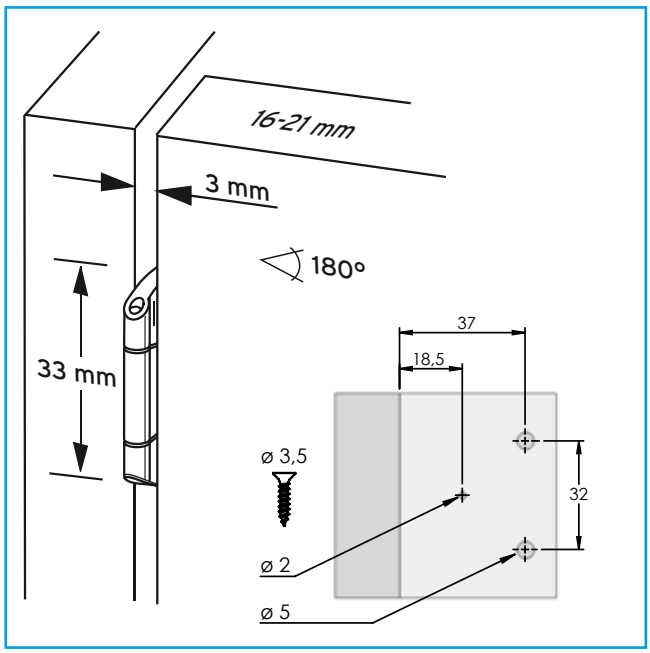

						STANDARD
3660 R 91 N		50	180°	3	≥ 16 / 16-21	ANSI

SERIES 3000

Door part

to be ordered separately

- To be fastened with screw or through insertion
- Cup Ø 35 mm
- Drilling pattern 45/9,5 mm, dowel 8 mm

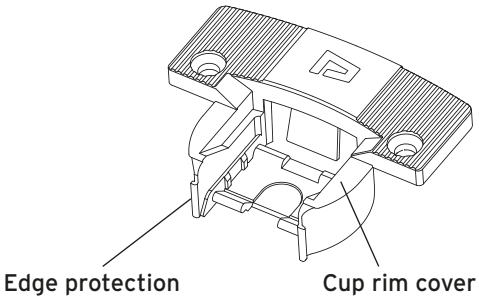

3031R10 N		50
3031R20 N		50

Spacers

- For carcasses under 19 mm
- Made of transparent plastic

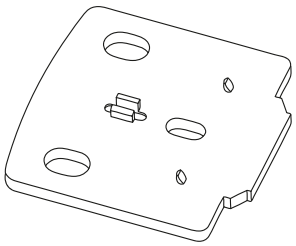

1,0 mm	3410	50
1,5 mm	3415	50
3,0 mm	3430	50

Subject to technical modifications. Misprintings and other errors excepted from guarantee. • 04.13

SERIES 3000

Overlay doors

- For gaps of 4 and 6 mm
- Full and half overlay application
- Clip mounting
- All variants certified in accordance with ANSI Grade 1
- Opening between 180° and 270°

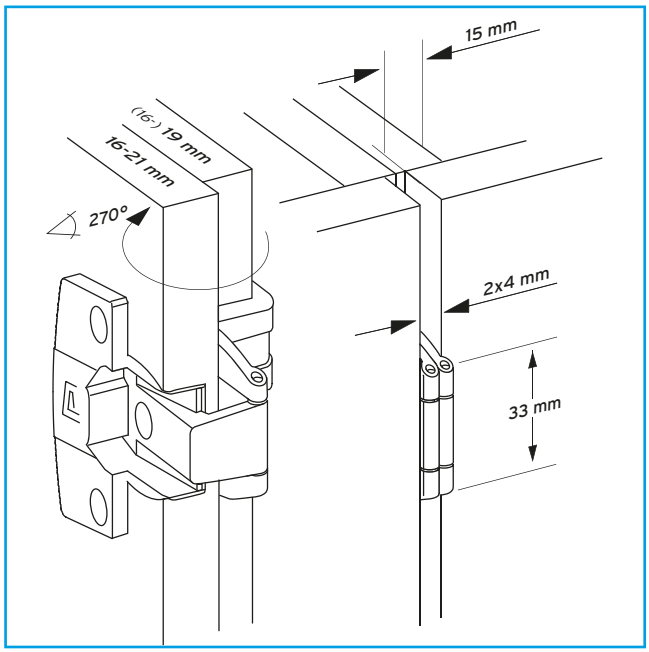

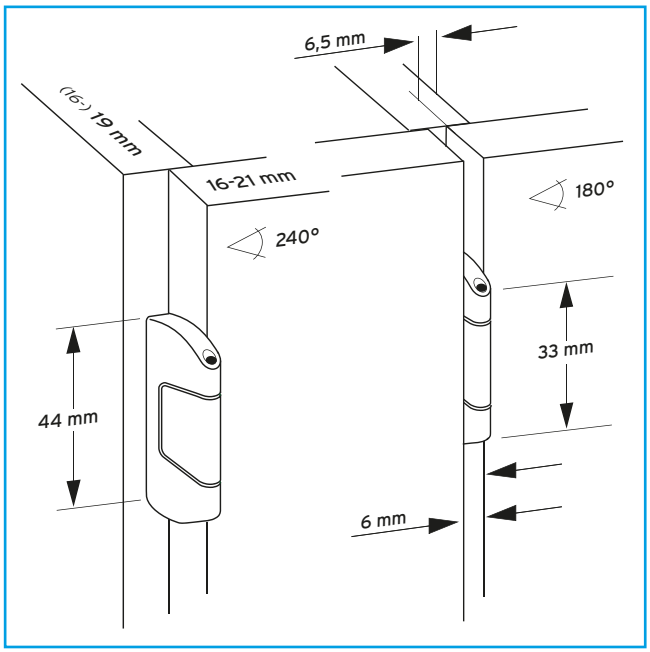

Door part to be ordered separately Page 8							STANDARD
3820 R 91 N		50	270°	4	19 / 15	19 / 19-21	ANSI
3640 R 91 N		50	240°	6	12 / 6,5	19 / 19-21	ANSI
3650 R 91 N		50	180°	6	12 / 6,5	19 / 19-21	ANSI

SERIES 2000

Technical information

- Visible knuckle of 5 or 7 mm
- Vertical adjustment ± 2 mm, to be activated
- Door overlay adjustment – 3 mm
- Separate mounting of door part and hinge arm
- Expansion dowels with pre-mounted screws on the hinge arm (optional)
- Door thicknesses 16 - 21 mm (depending on the edge radius)
- Flat hinge arm
- With catch
- One cup for all models
- Cup rim cover and edge protection
- Zinc die cast, nickel matt plated

Drilling pattern door

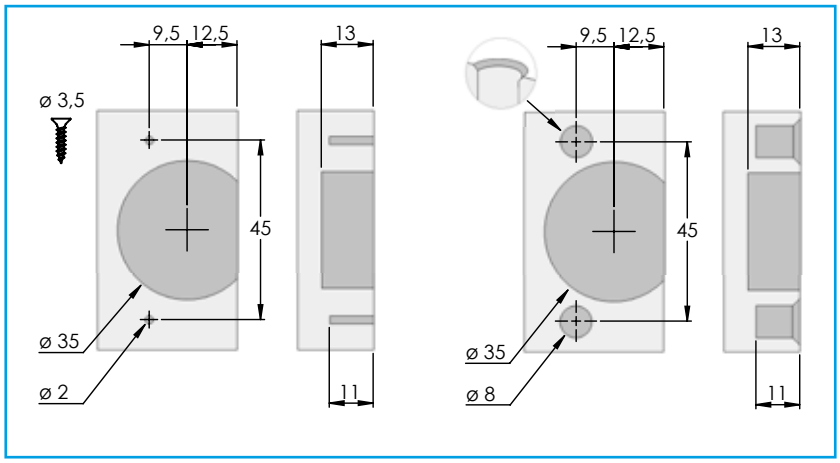

Drilling pattern carcass
for overlay doors

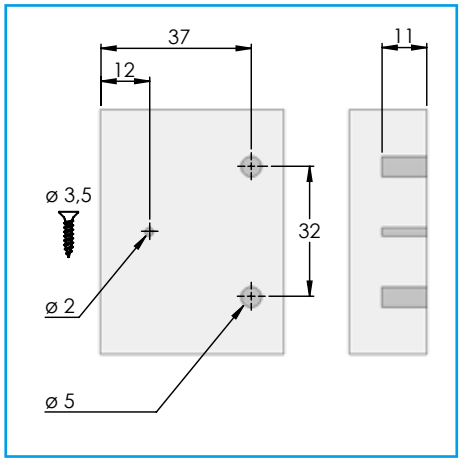

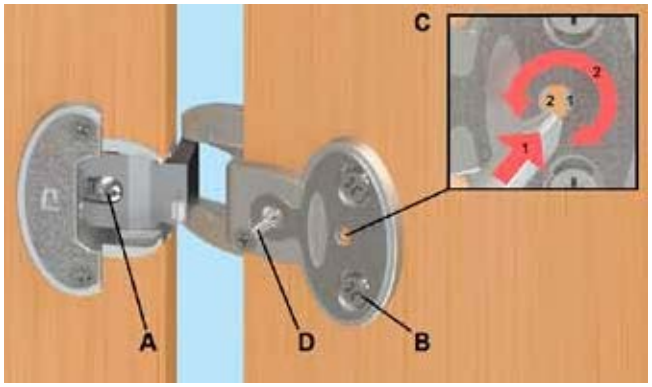

Door overlay adjustment
- Loosen screw A, set the gap, re-tighten the screw.

Vertical adjustment
- Loosen screws B.
- Activate the adjustment by pressing with screwdriver onto the window C.
- Adjust continuously the door by turning the screwdriver (± 2 mm).
- Re-tighten the screws.
- Only then the chip wood panel screw D (Ø 3,5 mm) has **absolutely** to be screwed in.

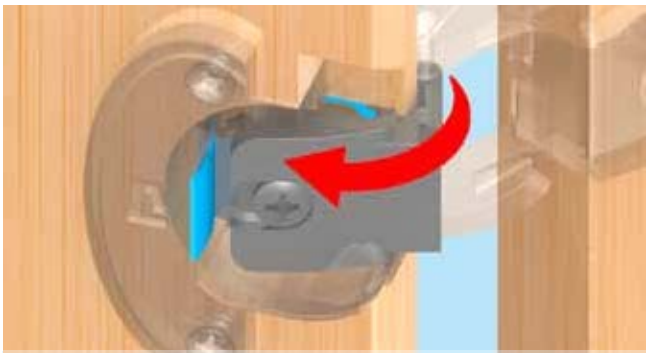

Simple and secure lock in through thumb push

For safety reasons dismounting only with screwdriver

Subject to technical modifications. Misprintings and other errors excepted from guarantee. • 04.13

SERIES 2800

Overlay doors

- For gaps of 4 and 8 mm
- Full and half overlay
- Clip mounting or screw connecting
- Also with finger protection
- All variants certified in accordance with ANSI
- Opening between 180° and 270°

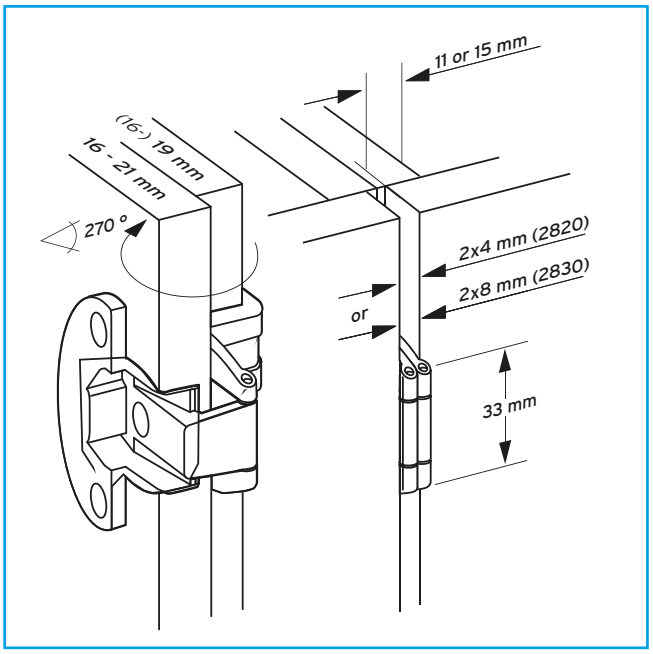

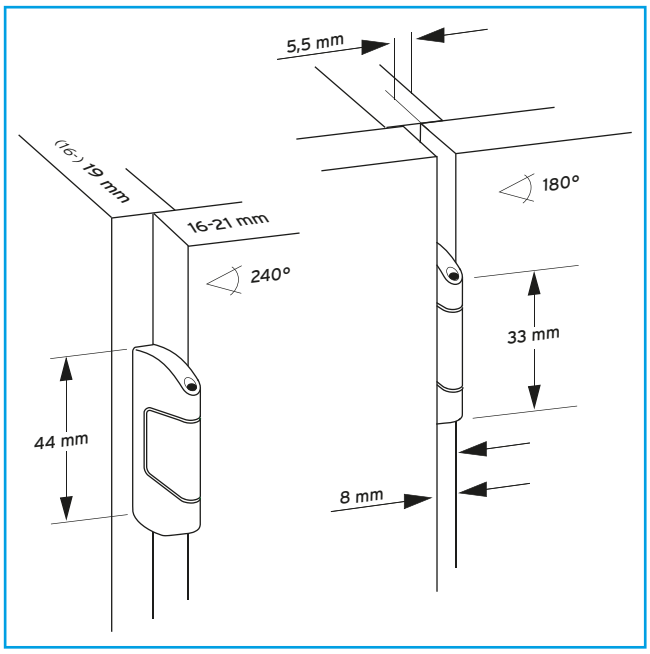

C= clip mounting S = screw connecting Door parts to be ordered separately Page 12							STANDARD C/S
2820 C/S 51 N		50	270°	4	19 /15	19 / 19-21	ANSI
2830 C/S 51 N		50	270°	8	19 / 11	19 / 19-21	ANSI
2840 C/S 51 N		50	240°	8	13 / 5,5	19 / 19-21	ANSI
2850 C/S 51 N		50	180°	8	13 / 5,5	19 / 19-21	ANSI
Pre-mounted dowel screws: order hinge arms C 61 N or S 61 N							

SERIES 2600

Inset doors

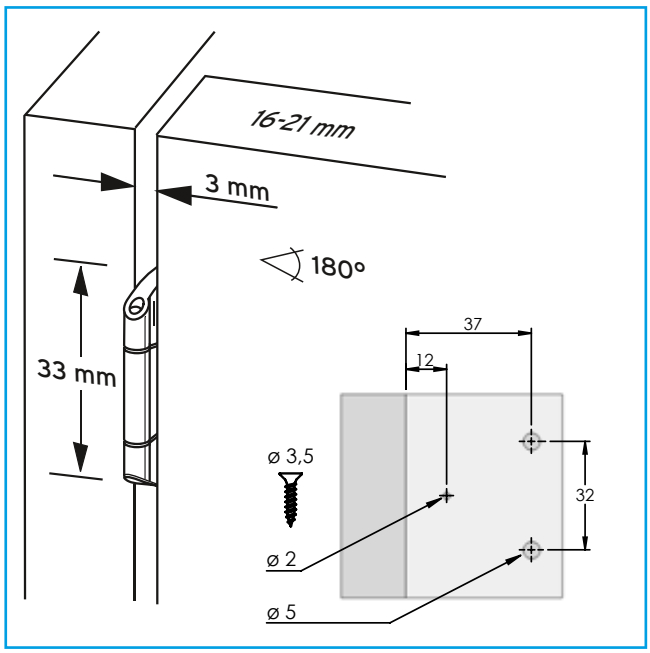

➔ P 20

C= clip mounting S = screw connecting Door parts to be ordered separately							STANDARD C / S	G
3D adjustment	2660 C/S 81 N		50	180°	3	≥16 / 16-21	ANSI	
3D adjustment	2660G81 N		50	180°	3	≥16 / 5-8		EN

SERIES 2000

Door part

to be ordered separately

- To be fastened with screw or through insertion
- Cup Ø 35 mm
- Drilling pattern 45/9,5 mm, dowel 8 mm

Cup rim cover Edge protection

C= clip mounting S = screw connecting		
2031 C/S 10 N		50
2031 C/S 20 N		50

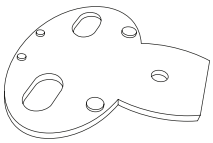

Spacer

- For carcasses under 19 mm
- Can be stockpiled
- Made of transparent plastic

1,0 mm	2410	100
1,5 mm	2415	100

Special Euro screws for hinge arm fastening

10 mm	6,3 x 10 S 2000	100
13 mm	6,3 x 13 S 2000	100
16 mm	6,3 x 16 S 2000	100
18 mm	6,3 x 18 S 2000	100

Subject to technical modifications. Misprintings and other errors excepted from guarantee. • 04.13

SERIES 2600

Overlay doors

- For gaps of 3 and 6 mm
- Full and half overlay
- Clip mounting or screw connecting
- Opening between 180° and 270°

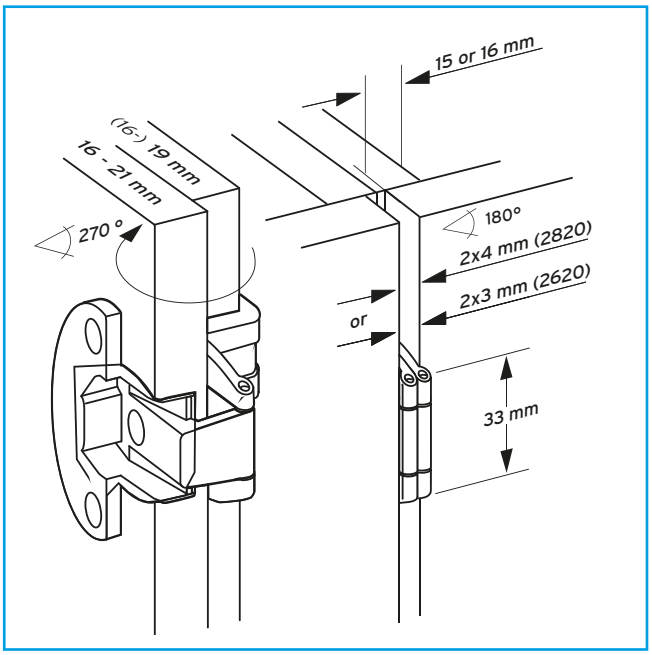

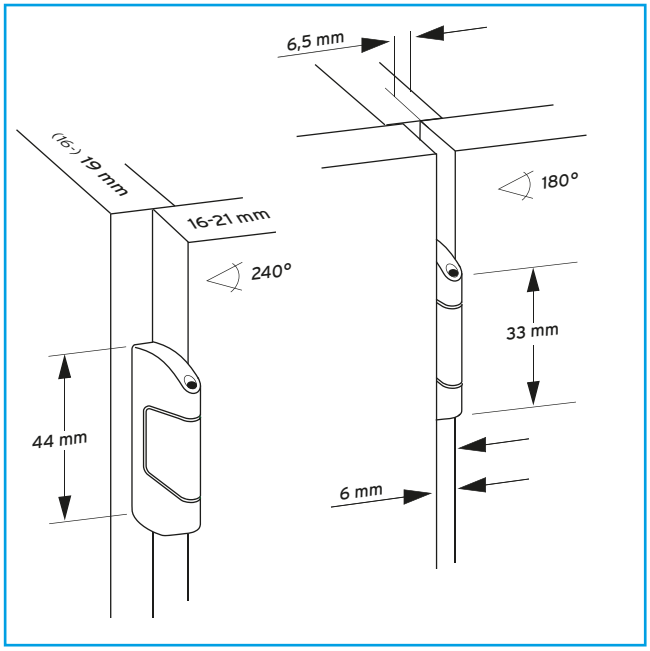

C = clip mounting S = screw connecting Door part to be ordered separately Page 12							STANDARD C/S
2820 C/S 51 N		50	270°	4	19 / 15	19 / 19-21	ANSI
2620 C/S 51 N		50	270°	3	19 / 16	19 / 19-21	EN
2640 C/S 51 N		50	240°	6	12 / 6,5	19 / 19-21	EN
2650 C/S 51 N		50	180°	6	12 / 6,5	19 / 19-21	EN
Pre-mounted dowel screws: order hinge arms C 61 N or S 61 N							

SERIES 3000

Technical information

- Visible knuckle of 5 mm
- Vertical adjustment ± 2 mm to be activated
- Door overlay adjustment in the hinge arm without gap between knuckle and door in both directions + 1/– 2 mm
- Depth adjustment ± 1 mm
- Security screw in the hinge arm to be mounted already in the factory
- Flat module friendly hinge arm
- Also applicable for 16 mm doors (to be cut in or reduced opening angle)
- With catch
- Zinc die cast, nickel matt plated (other finishes on request)

Drilling pattern door

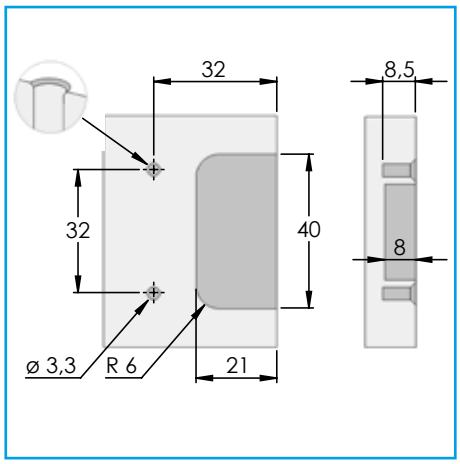

Drilling pattern carcass

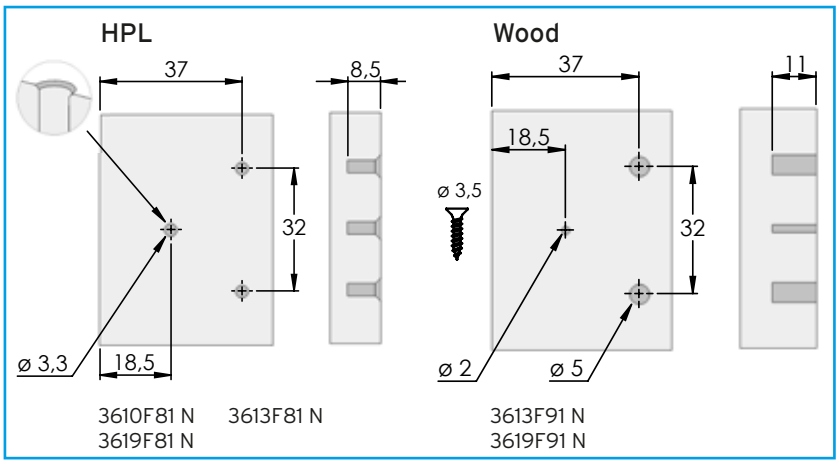

Screw fastening:
in **HPL** with self-tapping screws which have corrosion resistant special finish (always attached to the hinge)
in **wood** through expansion dowels with pre-mounted screws

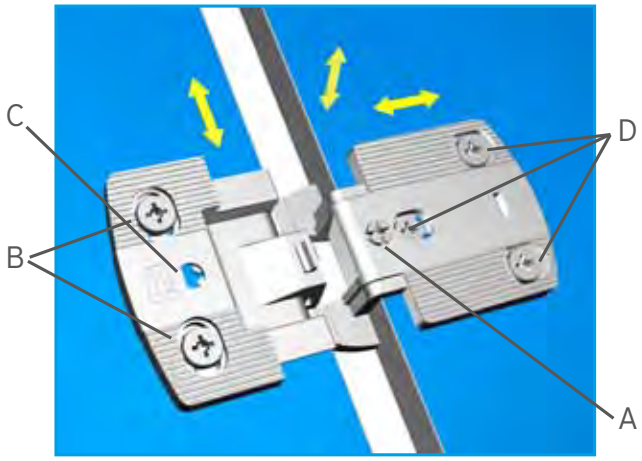

Overlay adjustment
Through screw A adjustments in both directions

Vertical adjustment
Loosen screw B
Activate the adjustment by pressing with screwdriver onto the window C
Adjust continuously the door by turning the screwdriver (± 2 mm)

Depth adjustment
Loosen screw D and adjust manually in the prolonged hole

Subject to technical modifications. Misprintings and other errors excepted from guarantee. • 04.13

SERIES 3000

for thin boards

- Special hinge for thin doors and compact boards (HPL) 10 - 13 mm
- For gaps of 6 mm
- Full and half overlay
- Unique 3D adjustment
- Outstanding stability and longevity
- All variants certified in accordance with ANSI
- Opening up to 270°

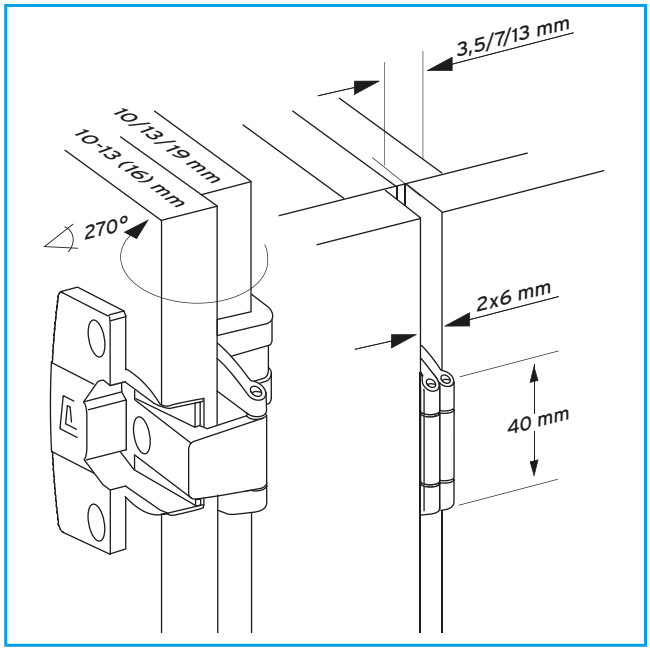

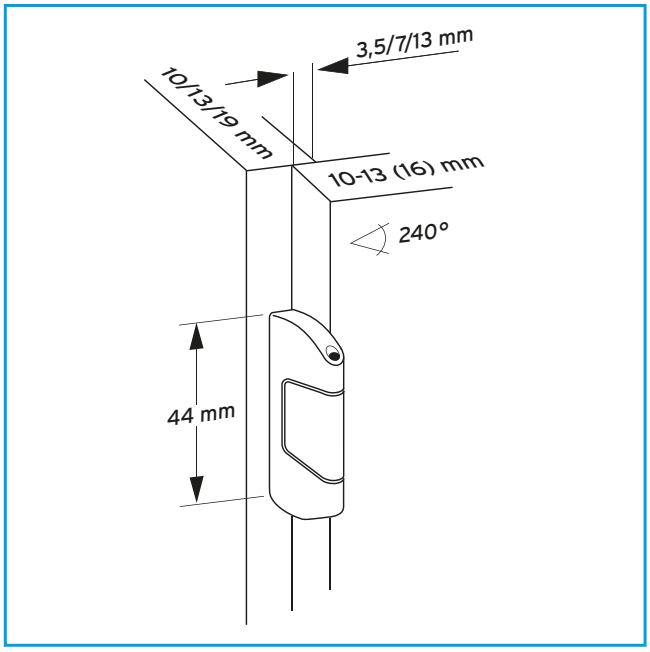

Self-tapping screws and 3,3 mm drill are always attached to the shipment							STANDARD
3610F81 N		50	270° 240°	6	9,5 / 3,5	10 / 10-13 13 / 10-13	ANSI
3613F81 N		50	270°	6	13 / 7	13 / 10-13	ANSI
3619F81 N		50	270°	6	19 / 13	19 / 10-16	ANSI
3613F91 N		50	240°	6	13 / 7	19 / 10-16	ANSI
3619F91 N		50	270°	6	19 / 13	19 / 10-16	ANSI

FLAT HINGE

for thin boards

- Special hinge for thin doors and compact boards (HPL) 10 - 13 mm
- For 6 mm gaps
- Short, flat hinge arm, module friendly
- Single and twin application
- Certified in accordance with ANSI Grade 1
- Opening up to 240°
- With catch
- Overlay adjustment −1 mm
- Vertical adjustment ± 2 mm
- Zinc die cast, nickel matt plated
- **Stainless steel version for single hinge**

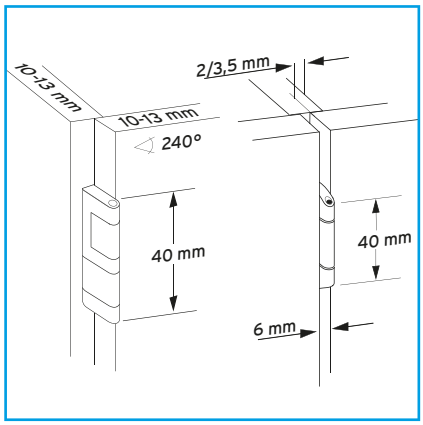

Drilling pattern door

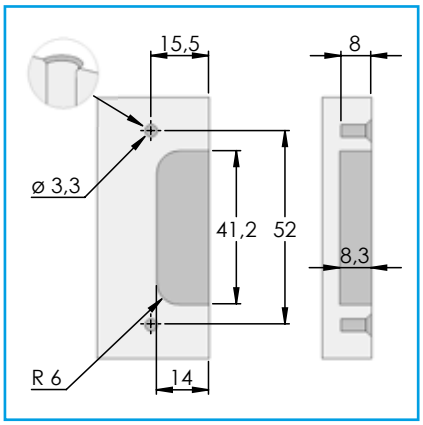

Drilling pattern carcass

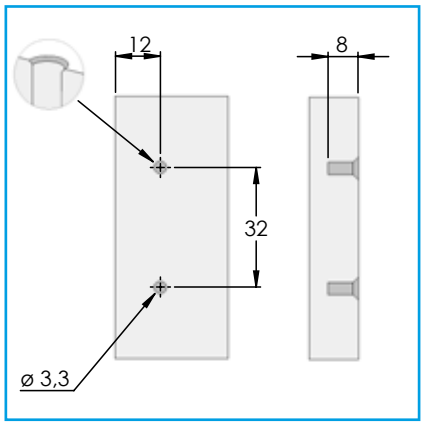

							STANDARD
364FL51 N		100	240°/270°	6	7,5 / 2,0* 9 / 3,5	10 / 10-13 13 / 10-13	ANSI ANSI
365FL51 N		50	180°	6	9 / 3,5	13 / 10-13	ANSI
364FL D 1,5		50	Spacer	* for 10 mm boards in combination with D 1,5 mm			

Self-tapping screws and 3,3 mm drill are always attached to the shipment

Subject to technical modifications. Misprintings and other errors excepted from guarantee. • 04.13

HINGE FOR FOLDING DOORS

- For free swinging and guided folding doors
- Double acting spring of stainless steel stabilizes both end positions
- Vertical adjustment ± 1 mm
- Folding angle 180°
- Gap 0 - 10 mm
- Pre-mounted gap of 3 mm

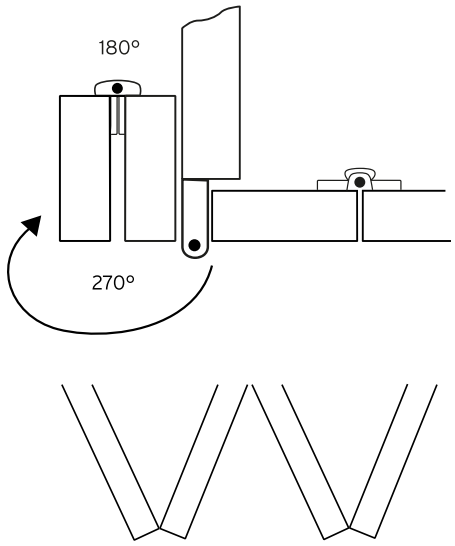

For free swinging folding doors
total width of both wings must be less than 600 mm

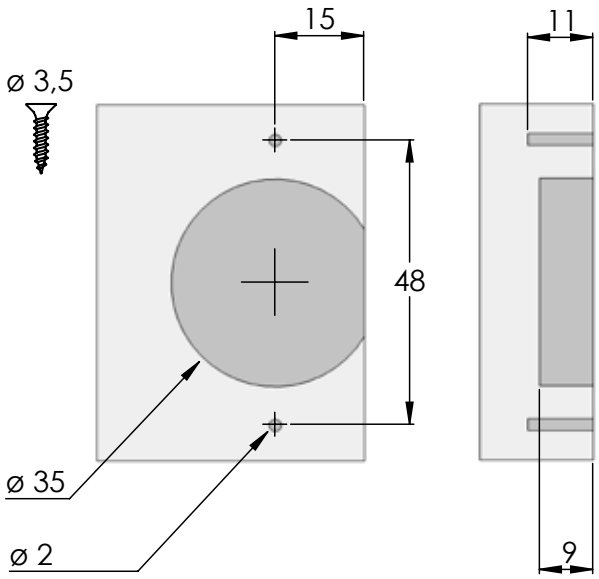

					STANDARD
2002 N	50	180°	0 - 10	from 13	EN
Nickel plated		Black finish on request			

GLASS DOOR HINGES

- For overlay and inset doors
- Secure fastening with through-holed glass
- Visible 5 mm knuckle
- Short, flat hinge arm
- Elegant front plates
- With catch
- Solid zinc die cast execution
- Vertical adjustment ± 1 mm
- Lateral adjustment −1 mm

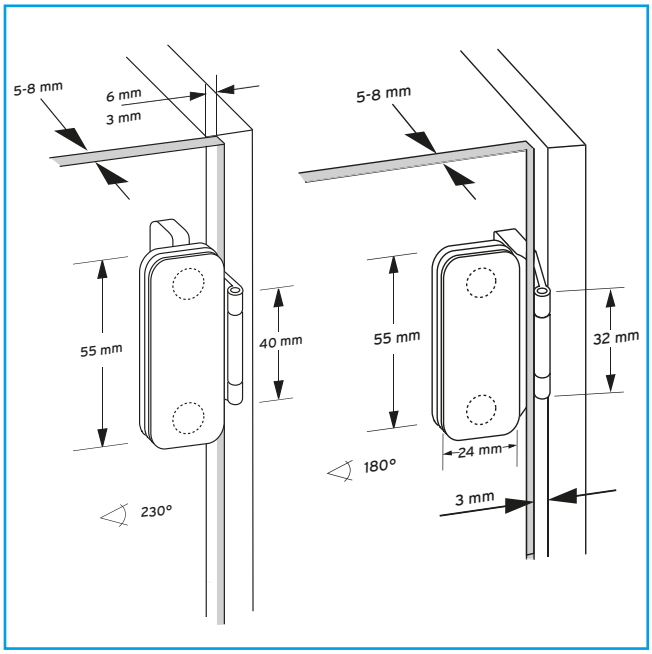

N = mat nickel plated MH= brass plated S = black							STANDARD
334HG51 N / MH / S		50	230°	3	6 / 3 6 / 6	≥16 / 5-8	EN
336HG51 N / MH / S		50	180°	3	inset	≥16 / 5-8	EN

Available with 3D adjustment and hinge arm for hole system 32/37 mm. Art. No. 2660G81 N – see page 12

Drilling patterns and further technical data see page 20

Subject to technical modifications. Misprintings and other errors excepted from guarantee. • 04.13

GLASS DOOR HINGES

- For glass to glass applications
- For overlay and inset doors
- Secure fastening with through-holed glass
- Visible 5 mm knuckle
- Short, flat hinge arm
- Elegant front plates
- With catch
- Solid zinc die cast execution
- Vertical adjustment ± 1 mm
- Lateral adjustment −1 mm

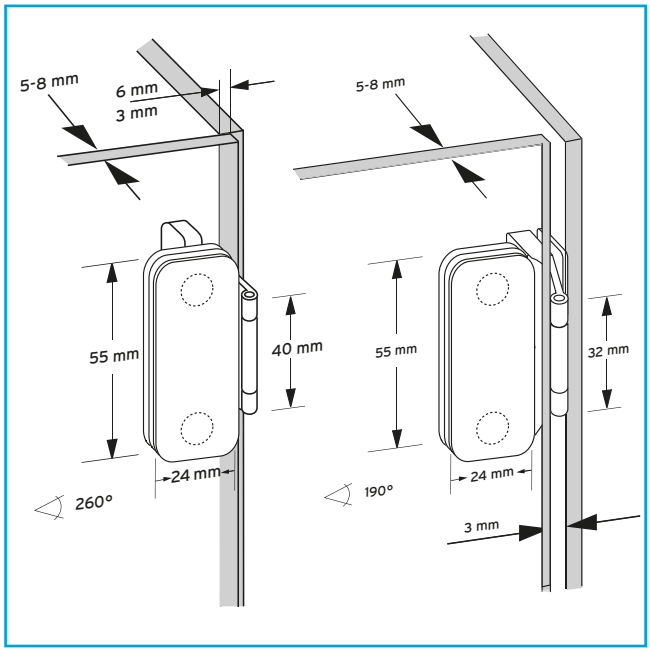

N = mat nickel plated MH= brass plated S = black							STANDARD
334GG51 N / MH / S		20	260°	3	6 / 3 6 / 6	/ 5-8	EN
336GG51 N / MH / S		20	190°	3	inset	/ 5-8	EN

Drilling patterns and further technical data see page 20

GLASS DOOR HINGES

Technical information

Overlay application

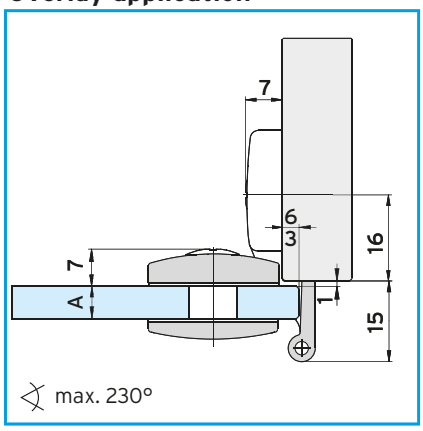

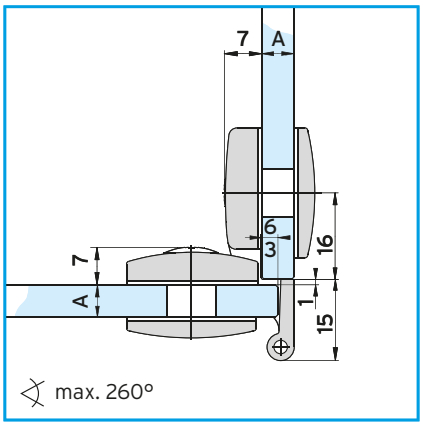

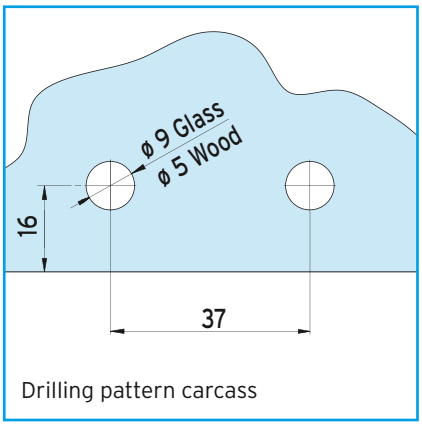

Drilling pattern door

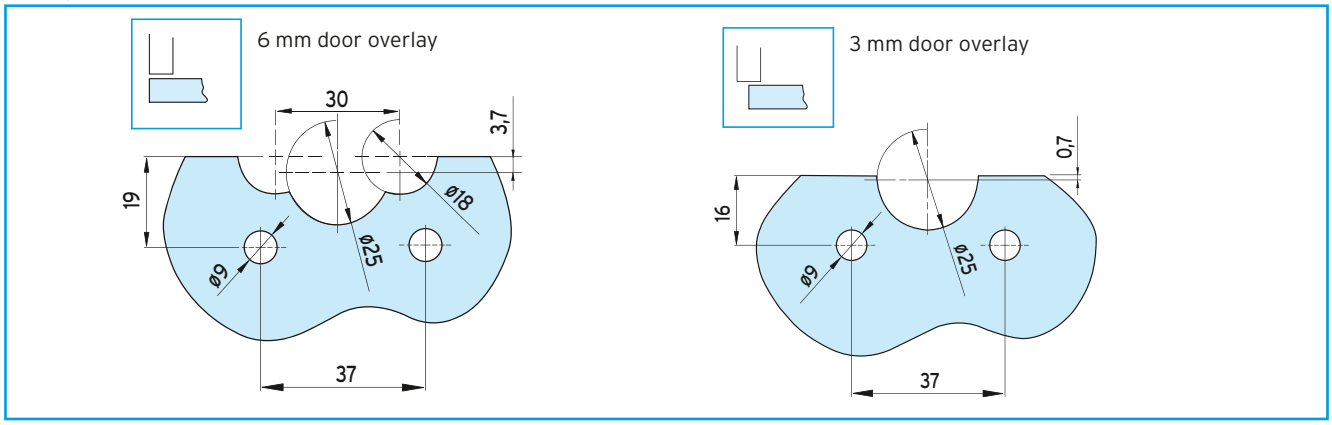

Inset application

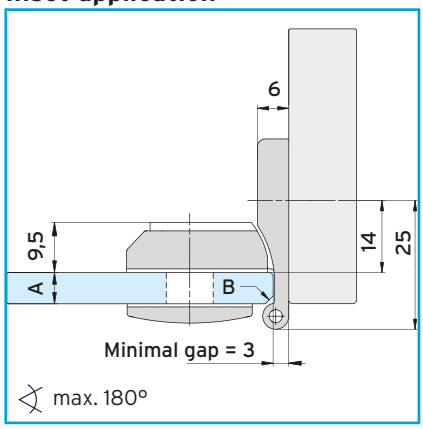

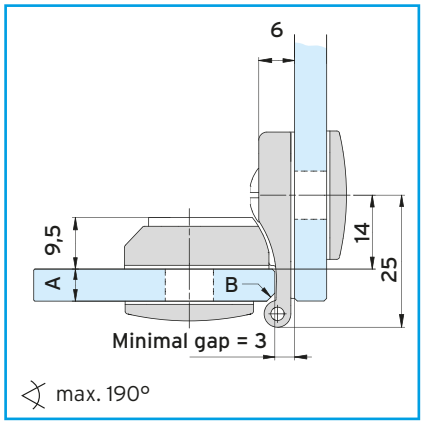

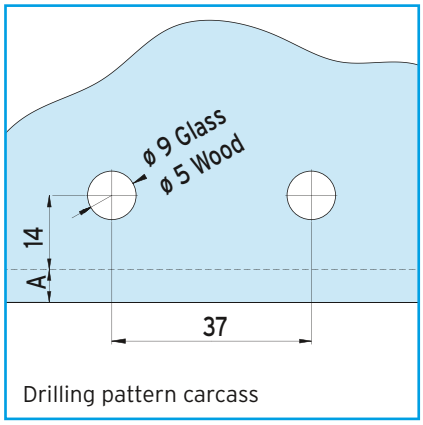

Drilling pattern door

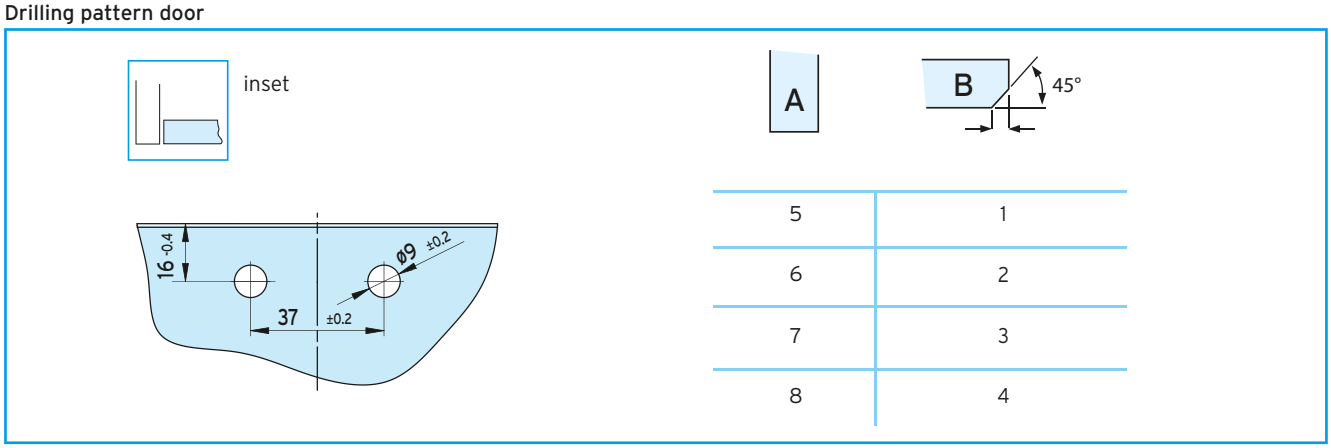

5	1
6	2
7	3
8	4

Subject to technical modifications. Misprintings and other errors excepted from guarantee. • 04.13

GLASS DOOR HINGES FOR GLUEING

Technical information

Glass on glass

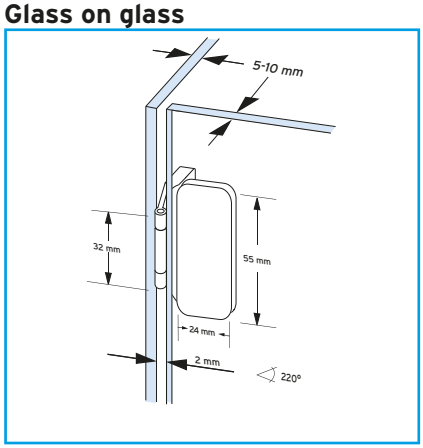

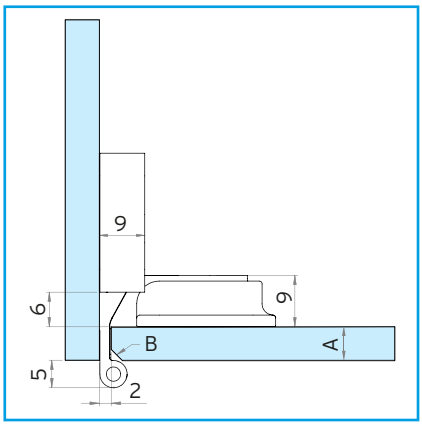

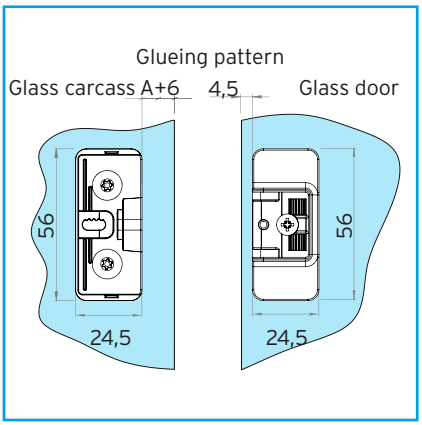

Wood on glass

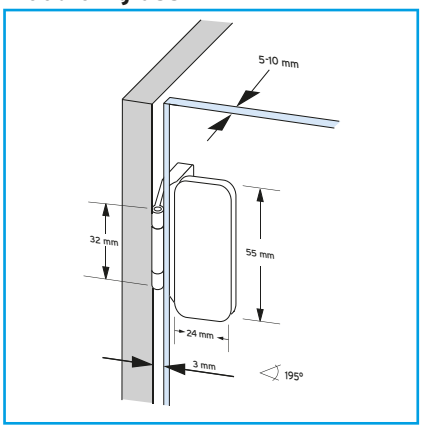

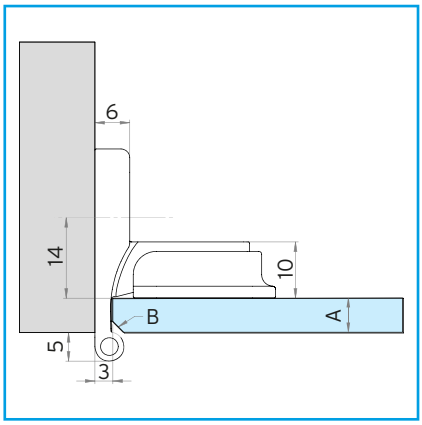

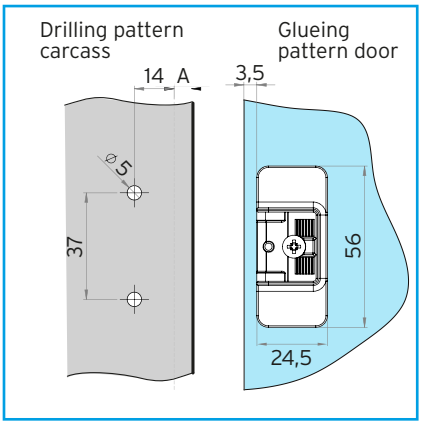

Mounting template

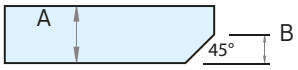

5	1
6	2 (GG = 1)
8	4
10	6

GLASS DOOR HINGES FOR GLUEING

- Elegant, compact metal hardware
- Glueing adaptor of stainless steel, brushed
- 3 mm gap
- 2 dimensional adjustment
  Vertical ± 1 mm
  Lateral – 2 mm

Mounting template
(for all variants)

							STANDARD
336KHG51 N		20	195°	3	inset	≥ 16 / 5-10	EN
300KML		1	Mounting template for convenient processing				

Subject to technical modifications. Misprintings and other errors excepted from guarantee. • 04.13

GLASS DOOR HINGES FOR GLUEING

- Elegant, compact metal hardware
- Invisible UV glueing mounting template for convenient processing
- 2 mm gap
- 3 dimensional adjustment
  Vertical ± 2 mm
  Lateral – 2 mm
  Depth ± 2 mm

- For glass on glass and glass on wood applications
- Glass door thickness up to 10 mm
- Inset application
- Opening angle > 180°
- With catch

							STANDARD
326KGG81 VA		10	220°	2	inset	/ 5-10	EN
300KML		1	Mounting template for convenient processing				

PRÄMETA

Genker Straße 16 • D-53842 Troisdorf
Tel. +49 (2241) 23996-20 • Fax +49 (2241) 23996-22
info@praemeta.de • www.praemeta.de

ISO 9001