2022

FEEL THE SERVICE!

PREMIUM PLUMBING PRODUCTS

EN

The Encore Premium Drain Master™
Is Truly The World's Greatest Drain

The Drain Master's solid heavy duty cast body is specification and commercial quality made of Type 316 stainless steel. It fits a 3-1/2" sink opening diameter and offers a self-centering stainless steel face flange with stainless steel beehive crumb cup strainer. The stainless steel rotary handle in the open position shall allow for fast drainage and shall have positive sealing action when closed. The Drain Master accepts 1-1/4" OD overflow elbow tube with a universal style for use with both 2" or 1-1/2" NPSM outlet.

Commercial Quality Features

- Type 316 stainless steel drain body
- Self-centering stainless steel face flange
- Stainless steel rotary handle
- 3 times the flow rate of conventional lever drains
- Services from the top; no disassembly required
- Easy one person installation

Iwo Group s.r.o.
IČO: 27558843
DIČ: CZ27558843

IMPERA PARK Hovorčovice
Hlavní 828,Hovorčovice
250 64, Česká republika

+420 602 558 254
www.iwogroup.eu
sales@iwogroup.eu

DRAINS, DRAIN MASTER™, ROTARY, STAINLESS STEEL
DSS-8000-X SERIES

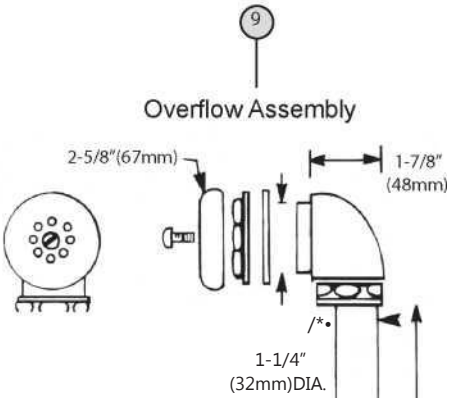

1. Solid stainless steel Type 316 construction throughout 3 times
2. the flow rate of conventional lever drains Rotary valve
2. provides fast, unobstructed water evacuation.
2. Full opening ball valve allows access for snaking or plunging from sink top eliminating costly service calls.
3. Twist lock recessed removable beehive crumb-cup prevents clogging and ensures continuous water flow.
4. Self-adjusting heat and chemical resistant PTFE seals eliminate costly replacement of o-rings and conventional gaskets.
5. Unique body style provides fast installation from sink top.
6. Solid stainless steel remote handle assembly for smooth, easy operation
7. Universal body provides both 2" and 1-1/2" (51mm and 38mm) waste outlet connections.
8. Fits standard 3-1/2" (89mm) sink opening
9. Can instantly convert to accept an overflow assembly eliminating double inventories
10. Optional flat strainer DSS-Y007

US Patent 6, 145, 136

Brass Nickel Plated with Stainless Steel Faceplate

18"
(457mm)

1-1/4"
(32mm)DIA.

Brass Nickel Plated Elbow
1-1/4" (32mm) O.D. tubing

T

14"
(356mm)

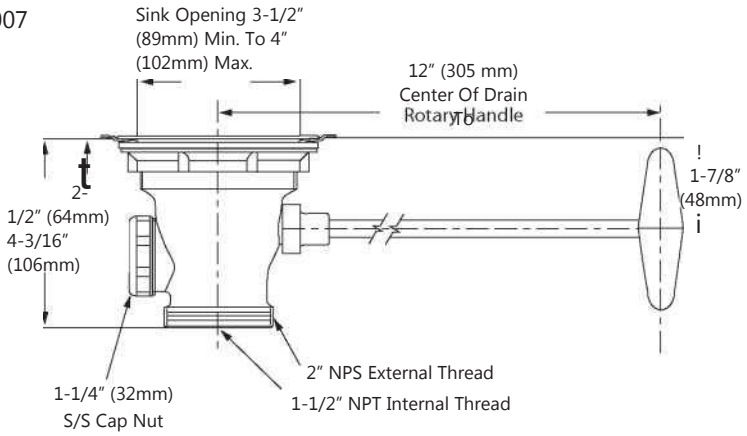

Model No.	Drain Type	Sink Opening Dia.	NPS	Handle Length	Strainer Type
DSS-8000-X	Capped Overflow	3-1/2" (89mm)	2" (51mm) or 1-1/2" (38mm)	10-1/2" (267mm)	Beehive Crumb Cup
DSS-8000-SP1				5" (127mm)	
DSS-8000-SP2				18" (457mm)	
DSS-8015	Overflow Assembly			12" (305mm)	
DSS-8015-P*				3" (76mm)	

*Vandal resistant prison package
For additional technical information visit our website for specification sheets.

Iwo Group s.r.o.
IČO: 27558843
DIČ: CZ27558843

IMPERA PARK Hovorčovice
Hlavní 828,Hovorčovice
250 64, Česká republika

+420 602 558 254
www.iwogroup.eu
sales@iwogroup.eu

DRAINS, QUIK FLO™, ROTARY, NICKEL PLATED DBN-8000-X SERIES

IWO group

QUIK FLO™

Heavy-duty nickel plated solid brass

Rotary valve provides fast, unobstructed water evacuation.

Twist lock recessed removable beehive crumb-cup prevents clogging and ensures continuous water flow.

Self-adjusting heat and chemical resistant PTFE seals eliminate costly replacement of o-rings and conventional gaskets.

3 times the flow rate of conventional lever drains

Fits standard 3-1/2" (89mm) sink opening

Full opening ball valve allows access for snaking or plunging from sink top and eliminates costly service calls.

Unique body style provides fast installation from sink top.

Solid stainless steel remote handle assembly for smooth, easy operation

Specification grade

- Universal body provides both 2" and 1-1/2" (51mm and 38mm) waste outlet connection and can instantly convert to accept an overflow assembly eliminating double inventories.
- Overflow accessories available

US Patent 6, 145, 136

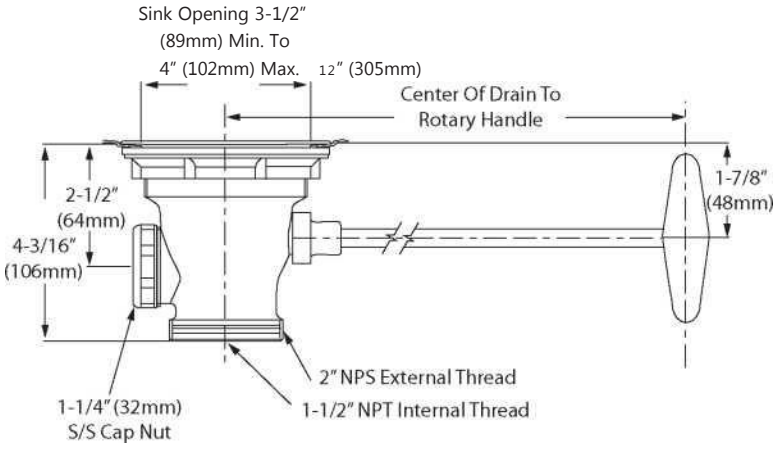

Overflow Assembly

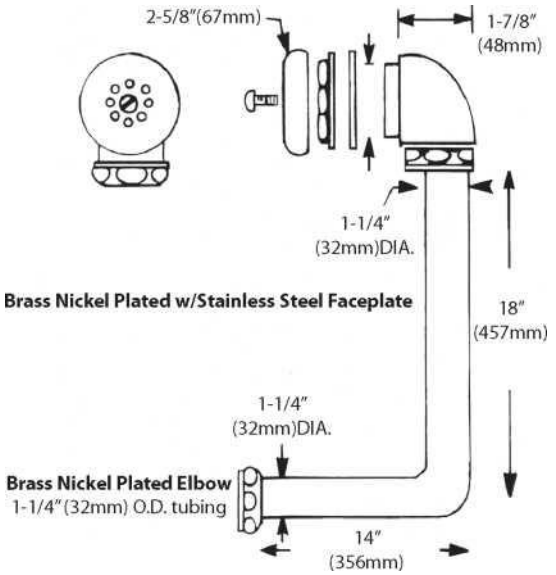

Model No.	Drain Type	Sink Opening Dia.	NPS	Handle Length	Strainer Type
DBN-8000-X	Capped Overflow		2" (51mm) or 1-1/2" (38mm)	10-1/2" (267mm)	Crumb Cup
DBN-8000-SP1		3-1/2" (89mm)		12" (305mm)	Flat Strainer
DBN-8015-SP1	Overflow Assembly				

For additional technical information visit our website for specification sheets.

COMPLIES WITH:
ANSI A112.18.1/B125

Iwo Group s.r.o.
IČO: 27558843
DIČ: CZ27558843

IMPERA PARK Hovorčovice
Hlavní 828,Hovorčovice
250 64, Česká republika

+420 602 558 254
www.iwogroup.eu
sales@iwogroup.eu

DRAINS, LEVER HANDLE
D10/D13 SERIES

D10-7x00 Series

D10-459x Series

D13-7x10 Series

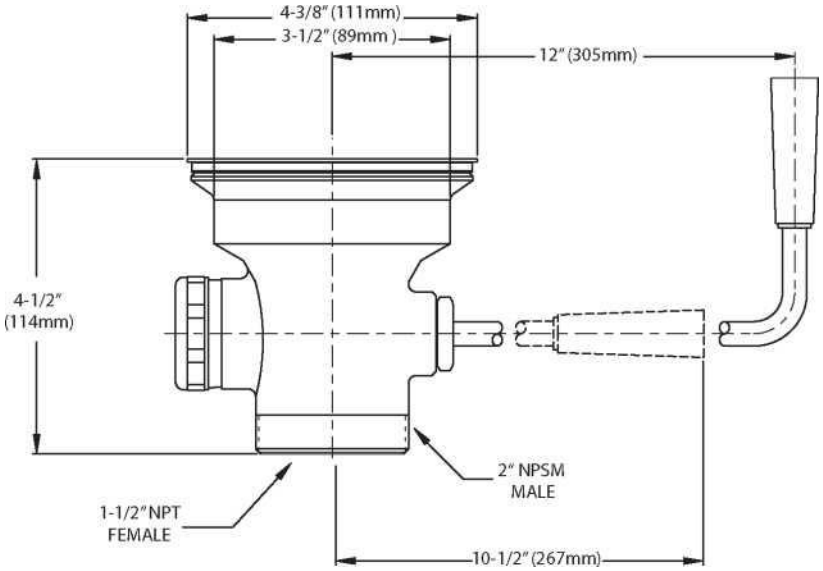

Overflow Assembly

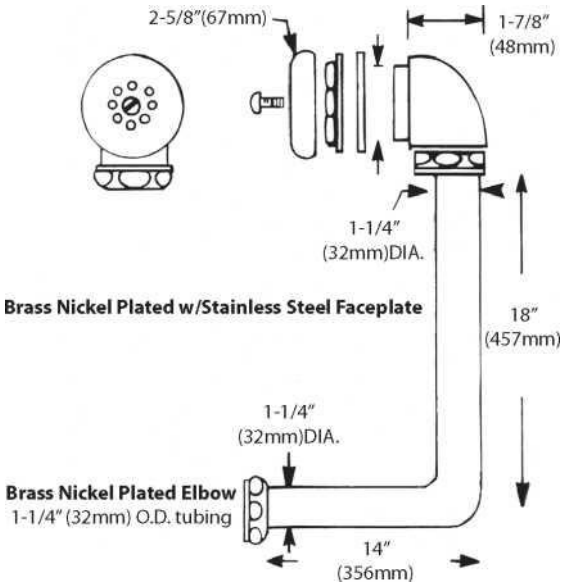

Model No.	Drain Type	Sink Opening Dia.	NPS	Face Flange Dia.	Strainer Type
D10-7300	Capped Overflow	3-1/2" (89mm)	1-1/2" (38mm)	4-1/2" (114mm)	Flat
D10-7400			2" (51mm)		
D10-4150		3" (76mm)		4" (102mm)	
D10-4151			1-1/2" (38mm)		
D10-4590	Overflow Assembly		2" (51mm)		
D10-4591			1-1/2" (38mm)		
D10-7315		3-1/2" (89mm)		4-1/2" (114mm)	
D10-7415			2" (51mm)		
D13-7310	Capped Overflow	3-1/2" (89mm)	1-1/2" (38mm)	4-1/2" (114mm)	Crumb Cup
D13-7315	Overflow Assembly				
D13-7410	Capped Overflow		2" (51mm)		
D13-7415	Overflow Assembly				

For additional technical information visit our website for specification sheets.

COMPLIES WITH:
ANSI A112.18.1/B125

Iwo Group s.r.o.
IČO: 27558843
DIČ: CZ27558843

IMPERA PARK Hovorčovice
Hlavní 828,Hovorčovice
250 64, Česká republika

+420 602 558 254
www.iwogroup.eu
sales@iwogroup.eu

DRAINS, TWIST HANDLE

D50-7200-xx Series

D50-459x Series

D53-7x10 Series

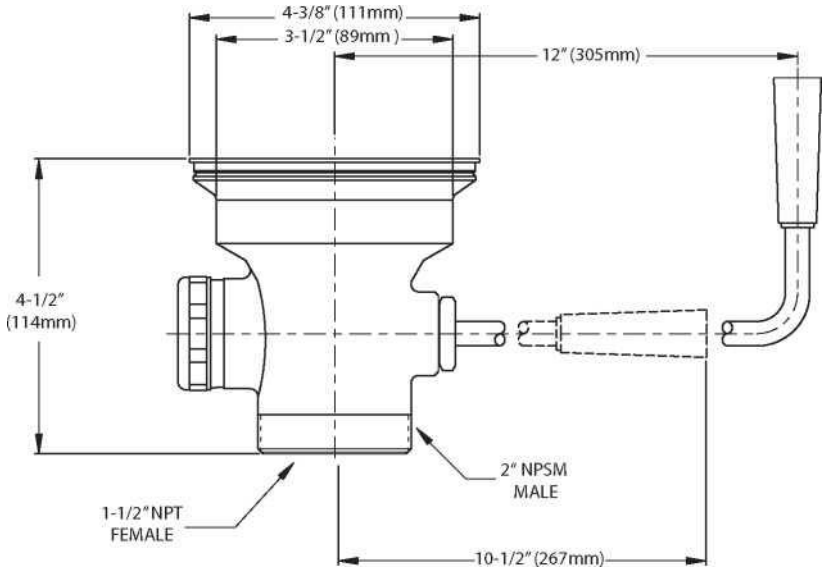

Overflow Assembly

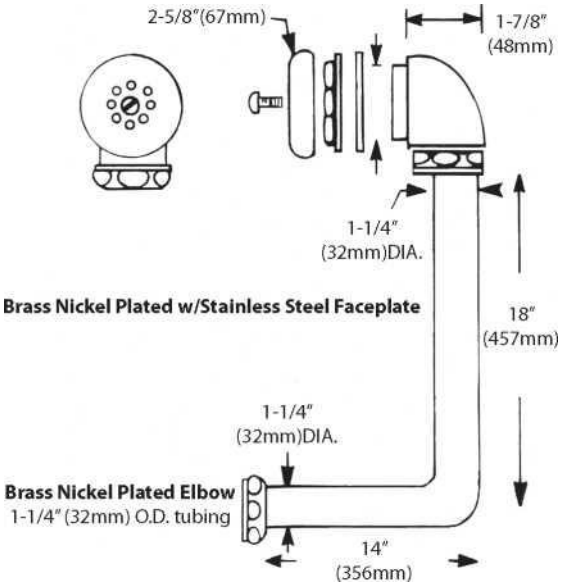

Model No.	Drain Type	Sink Opening Dia.	NPS	Face Flange Dia.	Strainer Type
D50-4151		3" (76mm)	1-1/2" (38mm)	4" (102mm)	
D50-4150	Capped Overflow		2" (51mm)		
D50-7100		3-1/2" (89mm)	1-1/2" (38mm)	4-1/2" (114mm)	
D50-7200			2" (51mm)		
D50-4591		3" (76mm)	1-1/2" (38mm)	4" (102mm)	Flat
D50-4590	Overflow Assembly		2" (51mm)		
D50-7115			1-1/2" (38mm)		
D50-7215		3-1/2" (89mm)	2" (51mm)	4-1/2" (114mm)	
D50-7200-RM*	Capped Overflow		1-1/2" (38mm)		
D50-7200-HN**			2" (51mm)		
D53-7110	Capped Overflow		1-1/2" (38mm)		
D53-7210		3-1/2" (89mm)	2" (51mm)	4-1/2" (114mm)	Crumb Cup
D53-7115	Overflow Assembly		1-1/2" (38mm)		
D53-7215			2" (51mm)		

*Brass male reducer

Iwo Group s.r.o.
IČO: 27558843
DIČ: CZ27558843

IMPERA PARK Hovorčovice
Hlavní 828,Hovorčovice
250 64, Česká republika

+420 602 558 254
www.iwogroup.eu
sales@iwogroup.eu

DRAINS, BOX PATTERN, LEVER AND TWIST HANDLE
D23/D63 SERIES

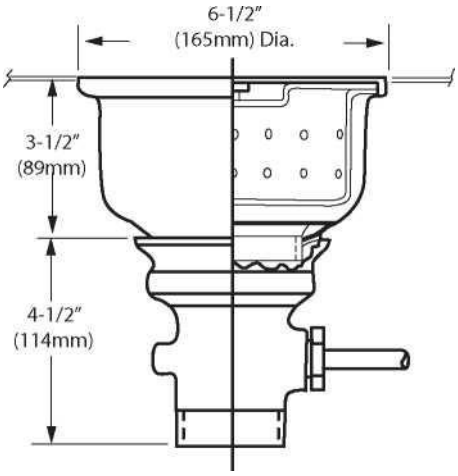

Overflow Assembly

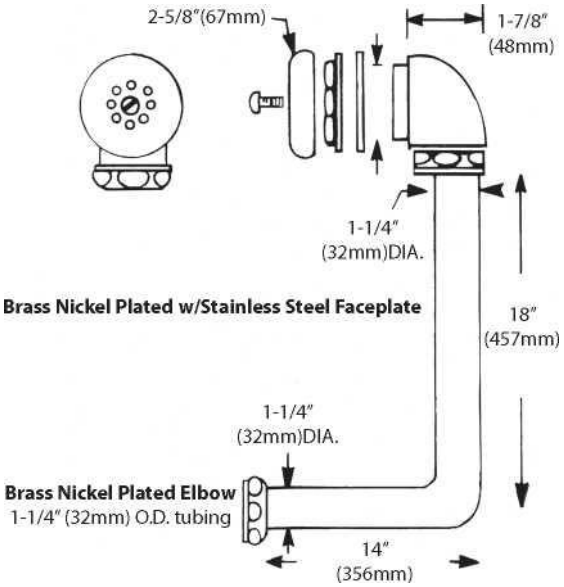

Model No.	Drain Type	Handle Style	Sink Opening Dia.	NPS	Strainer Type
D23-4161	No Overflow	Lever	6-1/2" (165mm)	1-1/2" (38mm)	Multiple
D23-4160				2" (51mm)	
D23-4151	Overflow Outlet			1-1/2" (38mm)	
D23-4150				2" (51mm)	
D23-4591	Overflow Assembly			1-1/2" (38mm)	
D23-4590				2" (51mm)	
D63-4161	No Overflow	Twist	6-1/2" (165mm)	1-1/2" (38mm)	Multiple
D63-4160				2" (51mm)	
D63-4151	Overflow Outlet			1-1/2" (38mm)	
D63-4150				2" (51mm)	
D63-4591	Overflow Assembly			1-1/2" (38mm)	
D63-4590				2" (51mm)	

Iwo Group s.r.o.
IČO: 27558843
DIČ: CZ27558843

IMPERA PARK Hovorčovice
Hlavní 828,Hovorčovice
250 64, Česká republika

+420 602 558 254
www.iwogroup.eu
sales@iwogroup.eu

DRAINS, SPECIAL PURPOSE
D34/D36/D83 SERIES

IWO group

D34-4161

D34-Y011

D34-Y011-MM

D36-2080

D83-4151-T

D83-4152-9T

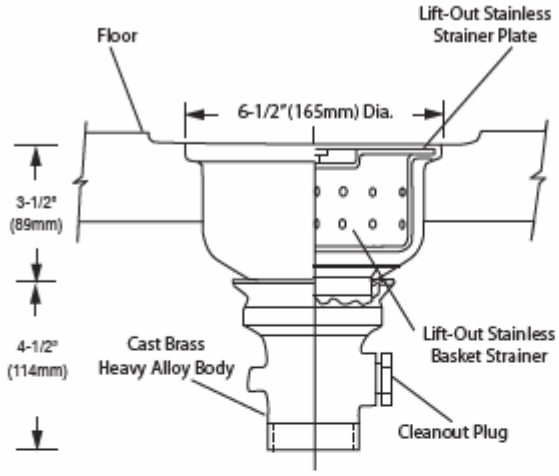

D34-4161

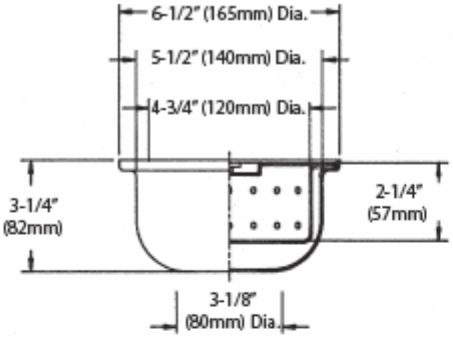

D34-Y011

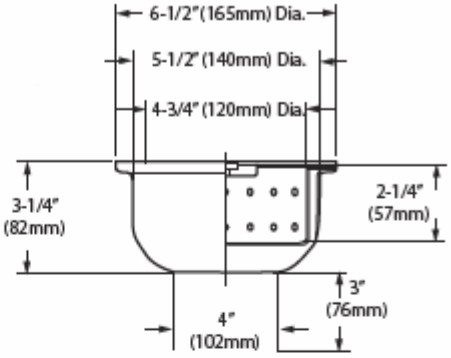

D34-Y011-MM

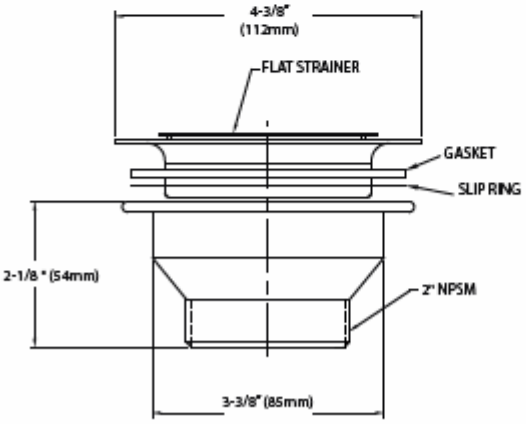

D36-2080

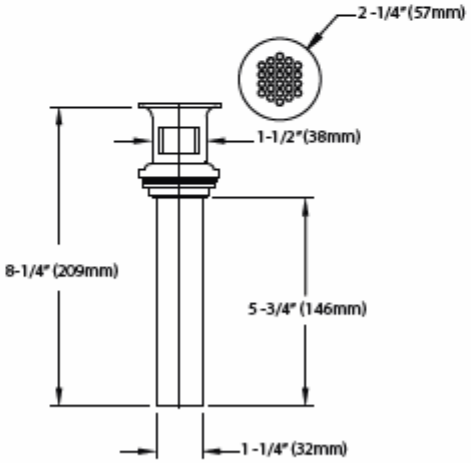

D83-4151-T

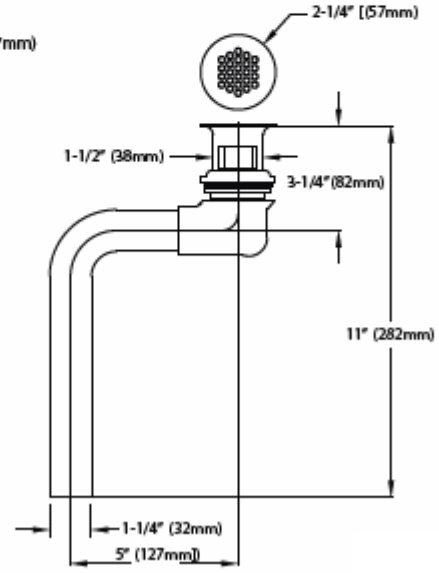

D83-4152-9T

Model No.	Drain Type	Sink Opening Dia.	NPS	Strainer Type
D34-4161	Open Floor	6-1/2" (165mm)	1-1/2" (38mm) & 2" (51mm)	Multiple
D34-4060			2" (51mm) & 2-1/2" (64mm)	
D34-Y011	Basket	6-1/2" (165mm)	—	Multiple
D34-Y011-MM			—	
D36-2080	Free Flow	3-1/8" (79mm)	2" (51mm)	Flat
D83-4151-T	Lavatory Grid	2-1/4" (57mm)	1-1/2" (38mm)	Flat
D83-4152-9T	Lavatory Offset Grid			

Stainless Steel Box Pattern Drain	
Model	**Description**
D34-X015	Bowl
D34-X016	Basket
D34-X017	Cover

For additional technical information visit our website for specification sheets.

Iwo Group s.r.o.
IČO: 27558843
DIČ: CZ27558843

IMPERA PARK Hovorčovice
Hlavní 828,Hovorčovice
250 64, Česká republika

+420 602 558 254
www.iwogroup.eu
sales@iwogroup.eu

IWO group

ACCESSORIES FOR DRAINS

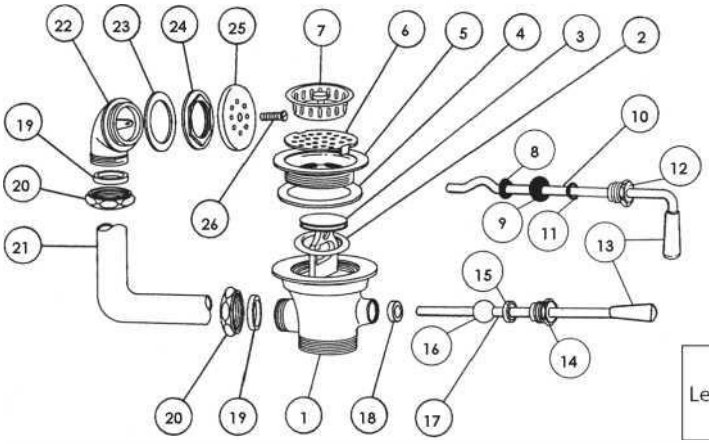

*Parts included in Lever Twist Drain Repair Kit D10-0010

Item No.	3" (76mm) Sink Opening Part No.	3-1/2" (89mm) Sink Opening Part No.	Description
1	D10-X007-U	D10-X008-U	1-1/2" NPS Waste Outlet Body Without Overflow Outlet (not shown)
1	D10-X007-U	D10-X008-U	2" NPS Waste Outlet Body Without Overflow Outlet (not shown)
1	D10-X007-U	D10-X008-U	1-1/2" NPS Waste Outlet Body With Overflow Outlet
1	D10-X007-U	D10-X008-U	2" NPS Waste Outlet Body With Overflow Outlet
2	D10-X021*	D10-X021*	Stopper "O" Ring, Neoprene
3	D10-Y001	D10-Y001	Stem Valve with "O-Ring"
4	D10-X009*	D10-X010*	Head Gasket
5	D10-X011	D10-X012	Face Flange, Stainless Steel
6	D10-X013	D10-X014	Flat Strainer, Stainless Steel
7	——	D13-0002	Crumb Cup Strainer, Stainless Steel
8	D50-X005*	D50-X005*	E-Ring
9	D50-X010	D50-X010	Washer
10	D50-0001	D50-0001	Twist Handle Assembly - 12" (305mm)
10	D50-0001-SP1	D50-0001-SP1	Twist Handle Assembly - 9" (229mm)
10	D50-0003	D50-0003	Twist Handle Assembly - 19-1/2" (495mm)
11	D50-X007*	D50-X007*	Rubber O-Ring
12	D50-X006	D50-X006	Packing Nut (Brass) Twist Model
13	D10-X026	D10-X026	Black Thermoplastic Knob
14	D10-X029	D10-X029	Packing Nut (Brass) Lever Model
15	D10-X027*	D10-X027*	Packing Nut Bushing
16	D10-X030	D10-X030	Brass Ball
17	D10-0001	D10-0001	Lever Handle Assembly - 10-1/2" (267mm)
18	D10-X025*	D10-X025*	Body Bushing (Lever Model)
19	D10-X022*	D10-X022*	Slip Joint Washer
20	D10-X023	D10-X023	Slip Joint Locknut
21	E48-4660	E48-4660	One Piece Overflow Elbow
22	E50-4580	E50-4580	Overflow Head for 1-1/4 " (32mm) Tubing
23	E01-4091	E01-4091	Gasket
24	E02-4091	E02-4091	Flanged Locknut
25	E50-X003	E50-X003	Stainless Steel Strainer for Overflow Head
26	E50-X004	E50-X004	Strainer Mounting Screw

3-1/2" Stainless Steel Crumb Cup Strainer

Model D13-0002

Rubber O-Ring for Twist Handle

Model D50-X007

Washer for Twist Handle

Model D50-X010

Lever Twist Drain Repair Kit

Model	Description
D10-0010	Includes one of each listed below

Stopper "O" Ring, Neoprene Head Gasket for 3" Opening Head Gasket for 3-1/2" Opening

E-Ring

Rubber O-Ring

Packing Nut Bushing

Body Bushing (Lever Model)

Slip Joint Washer Washer

Black Thermoplastic Knob Paper

Washer 3" Face Flange Paper Washer 3-1/2" Face Flange

Optional Nickel Plated Brass and Plastic Reducers

Model	Size
E30-7744	Brass 2" NPS Female to 1-1/2" NPT Male
E30-7745	Male to Male Adapter
DPL-Y006	Plastic 2" NPS Female to 1-1/2" NPT Male

10-1/2" (267mm) Lever Handle Assembly

Model D10-0001

Twist Handle Assembly

Model	Description
D50-0001	12" (305mm)
D50-0001-SP1	9" (229mm)
D50-0003	19-1/2" (495mm)
D50-0005	15-3/4" (400mm)
D50-0006	18-3/4" (476mm)

Iwo Group s.r.o.
IČO: 27558843
DIČ: CZ27558843

IMPERA PARK Hovorčovice
Hlavní 828,Hovorčovice
250 64, Česká republika

+420 602 558 254
www.iwogroup.eu
sales@iwogroup.eu

ACCESSORIES FOR DRAINS
REPAIR PARTS FOR DSS AND DBN DRAINS

Retainer Screw, Stainless Steel, 8-32		
Model	DSS-X031	Ref. 1

Retainer, Stainless Steel		
Model	DSS-X004	Ref. 2

Back-Up Ring		
Model	DSS-X027	Ref. 3

Stainless Steel Ball		
Model	DSS-X002	Ref. 4

Overflow Cap w/ Washer, Stainless Steel		
Model	DBN-Y008	Ref. 5

Slip Ring, Mylar, .007" Thick		
Model	DSS-X022	Ref. 6

Flange Nut, Stainless Steel		
Model	DSS-X018	Ref. 7

Stainless Steel Strainer with Ball Handle		
Model	DSS-Y003	Ref. 8

Handle Assembly		
Model	Description	Ref. 9
DSS-Y002	12" (305mm)	
DSS-Y002-SP1	5" (127mm)	
DSS-Y002-SP2	18" (457mm)	

Stainless Steel Flat Strainer		
Model	DSS-Y007	Ref. 11

Strainer Retainer Kit	
Model	DSS-Y006

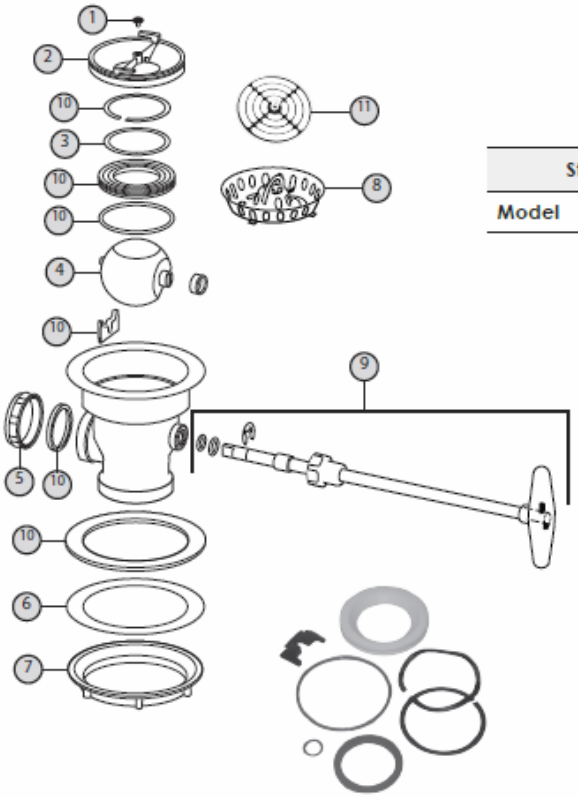

DSS/DBN Drain Repair Kit		
Model	DSS-0010	Ref. 10

Includes: Wave Spring, Seat, O-Ring, Trunion, Washer, Head Gasket

Universal S/S Drain Handle Support For Lever Handle Outlets		
Model	Gauge	Finish
D50-1000	14	Satin

Universal S/S Drain Handle Support For Twist and Rotary Drain Outlets		
Model	Gauge	Finish
D50-2001	14	Satin

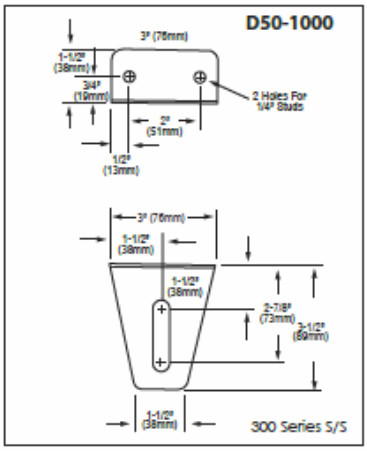

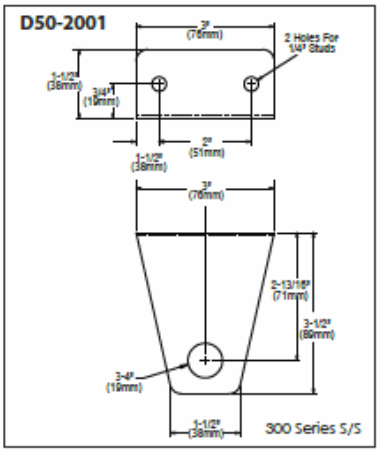

Iwo Group s.r.o.
IČO: 27558843
DIČ: CZ27558843

IMPERA PARK Hovorčovice
Hlavní 828,Hovorčovice
250 64, Česká republika

+420 602 558 254
www.iwogroup.eu
sales@iwogroup.eu

ACCESSORIES FOR DRAINS

Clean Out Plug, D34 Series	
Model	D34-X001

3" (76mm) Drain Body with Overflow	
Model	D10-X007-U

3-1/2" (89mm) Drain Body with Overflow	
Model	D10-X008-U

3" (76mm) Head Gasket	
Model	D10-X009

3-1/2" (89mm) Head Gasket	
Model	D10-X010

3" (76mm) Stainless Steel Face Flange	
Model	D10-X011

3-1/2" (89mm) Stainless Steel Face Flange	
Model	D10-X012

3" (76mm) Stainless Steel Flat Strainer	
Model	D10-X013

3-1/2" (89mm) Stainless Steel Flat Strainer	
Model	D10-X014

Vandal Resistant Locking Flat Strainer For 3" (76mm)

Vandal Resistant Locking Flat Strainer For 3-1/2" (89mm) Drain

Lever/Twist Drain Tool	
Model	D10-T001

O-Ring, Stem Valve	
Model	D10-X021

Washer, Slip Joint	
Model	D10-X022

Lock Nut, Slip Joint	
Model	D10-X023

Body Bushing, Lever Model	
Model	D10-X025

Black Phenolic Handle Only	
Model	D10-X026

Packing Nut, Bushing, Lever	
Model	D10-X027

Packing Nut, Brass, Lever	
Model	D10-X029

Brass Ball, Lever Model	
Model	D10-X030

Stem Valve with O-Ring	
Model	D10-Y001

Iwo Group s.r.o.
IČO: 27558843
DIČ: CZ27558843

IMPERA PARK Hovorčovice
Hlavní 828,Hovorčovice
250 64, Česká republika

+420 602 558 254
www.iwogroup.eu
sales@iwogroup.eu

ACCESSORIES FOR DRAINS

Stainless Steel Duo Mini Basket Drains with Combination Removable Crumb Cup Stopper			
Model	**Sink Opening**	**NPS**	**Face Flange Dia**
E18-1824	1-7/8" (48mm)	1-1/2"	2-7/8" (73mm)
E18-1822*	1-7/8" (48mm)	1-1/2"	2-7/8" (73mm)
E18-1822-FL*	1-7/8" (48mm)	1-1/2"	2-3/8" (60mm)

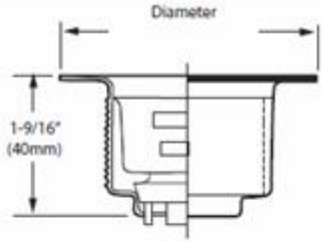

* Furnished without crumb cup stopper/locknut and washer supplied (Brass locknut available on application).

- Locknut and washer supplied
- Brass locknut available upon application
- 7-1/2", 10" and 12" (190mm, 254mm and 305mm) high overflows available

Replacement Crumb Cup	
Model	E18-1840

Flat Strainer	
Model	E18-1850

Stainless Steel Duo Basket Drains with Combination Removable Crumb Cup Stopper			
Model	**Sink Opening**	**NPS**	**Face Flange Dia**
E38-1010*	3.5 (89mm)	1-1/2"	4-1/2" (114mm)
E38-1012**	3.5 (89mm)	1-1/2"	4-1/2" (114mm)

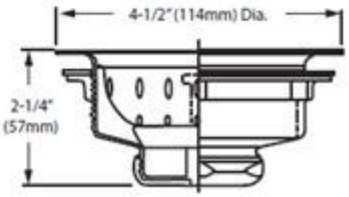

* Type 430 stainless steel, contains 16-18% chromium
** Type 18-8 stainless steel

- Coupling nut, gasket and sealing washer supplied
- Brass coupling nut available on application

Stainless Steel Flat Strainer Drain for 3-12" to 4" (89mm - 102mm) Openings		
Model	**Sink Opening**	**NPS**
E32-4900	3-1/2" - 4" (89mm - 102mm)	1-1/2"

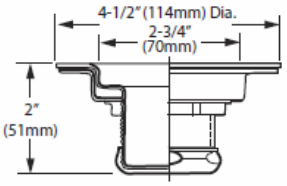

- Locknut, washer and coupling nut supplied

Stainless Steel Replacement Crumb Cup		
Model	**Sink Opening**	**NPS**
E38-4891	3-1/2" - 4" (89mm - 102mm)	1-1/2"

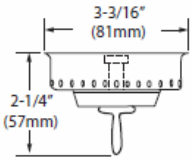

Iwo Group s.r.o.
IČO: 27558843
DIČ: CZ27558843

IMPERA PARK Hovorčovice
Hlavní 828,Hovorčovice
250 64, Česká republika

+420 602 558 254
www.iwogroup.eu
sales@iwogroup.eu

IWO group

Sink Drains, Brass Nickel Plated and ABS Thermoplastic

Model No.	Size	Sink Opening DIA	Face Flange DIA	Length	Material
E16-4171	1/2" NPS*	15/16" (24mm)	1-1/4" (32mm)	2" (51mm)	Brass
E16-4172	1/2" NPS*	15/16" (24mm)	1-1/4" (32mm)	2" (51mm)	Brass N.P.
E16-4173	1/2" NPS*	15/16" (24mm)	1-1/4" (32mm)	3-1/2" (89mm)	Brass
E16-4174	1/2" NPS*	15/16" (24mm)	1-1/4" (32mm)	3-1/2" (89mm)	Brass N.P.

E16-4210	3/4" NPS	1-1/8" NPS	1-1/2" (38mm)	1-1/4" (32mm)	Brass

E16-3010+	1" NPS	1-3/8" (35mm)	2" (51mm)	1-1/2" (38mm)	Gray ABS
E16-4010	1" NPS	1-3/8" (35mm)	2" (51mm)	1-1/2" (38mm)	Brass
E16-4011	1" NPS	1-3/8" (35mm)	2" (51mm)	1-1/2" (38mm)	Brass N.P.
E16-3020+	1" NPS	1-3/8" (35mm)	2" (51mm)	2-7/8" (73mm)	Gray ABS
E16-4020	1" NPS	1-3/8" (35mm)	2" (51mm)	3-1/4" (82mm)	Brass
E16-4021	1" NPS	1-3/8" (35mm)	2" (51mm)	3-1/4" (82mm)	Brass N.P.
E16-4030	1" NPS	1-3/8" (35mm)	2" (51mm)	4" (102mm)	Brass
E16-4031	1" NPS	1-3/8" (35mm)	2" (51mm)	4" (102mm)	Brass N.P.

E16-4050	1-1/2" NPS	2" (51mm)	3" (76mm)	1-1/2" (38mm)	Brass
E16-4051	1-1/2" NPS	2" (51mm)	3" (76mm)	1-1/2" (38mm)	Brass N.P.
E16-4055	1-1/2" NPS	2" (51mm)	3" (76mm)	3" (76mm)	Brass
E16-4056	1-1/2" NPS	2" (51mm)	3" (76mm)	3" (76mm)	Brass N.P.

E16-4060	2"NPS*	2-1/2" (65mm)	3-1/2" (89mm)	2" (51mm)	Brass
E16-4061	2"NPS*	2-1/2" (65mm)	3-1/2" (89mm)	2" (51mm)	Brass N.P.

Note: + = Gray ABS Thermoplastic
*2" (51mm) drains are furnished with locknut and washer.

Brass and Rubber Stoppers for 1" and 1-1/2" NPS Drains

Model	Size	Material
E60-4081	1" NPS	Brass
E60-4082	1" NPS	Brass N.P.
E60-4083	1" NPS	Rubber
E60-4085	1-1/2" NPS	Brass N.P.
E60-4088	1-1/2" NPS	Brass

Stainless Steel Strainer for 3/4" (19mm) Sink Drain

Model	E16-4200

Washers and Locknuts for 1", 1-1/2" and 2" NPS Drains

Rubber Washers		Flanged Brass Locknuts		Flanged Locknuts Zinc	
Model	**Size**	**Model**	**Size**	**Model**	**Size**
E01-4090	1" NPS	E02-4090-BR	1" NPS	E02-4090	1" NPS
E01-4091	1-1/2" NPS	E02-4091-BR	1-1/2" NPS	E02-4091	1-1/2" NPS
E01-4092	2" NPS			E02-4092	2" NPS

Brass Overflow Tubes 1" and 1-1/2" NPS Drains			
Model No.	**Size**	**Length**	**Seat Material**
E15-0222*	1" NPS	7" (178 mm)	PVC
E15-0220*	1" NPS	9" (229 mm)	PVC
E15-0240**	1-1/2" NPS	7-1/2" (190mm)	PVC
E15-0242**	1-1/2" NPS	10" (254mm)	PVC
E15-0244**	1-1/2" NPS	12" (305mm)	PVC

Note:
*E15-0220 and E15-0222 are furnished with overflow strainer
**Will only fit Model No. E18-1822 stainless steel drain

Stainless Steel Overflow Tubes 1" and 1-1/2" NPS Drains			
Model	**Size**	**Length**	**Seat Material**
E13-0240	1-1/2" NPS	7-1/2" (190mm)	Swedged
E13-0242	1-1/2" NPS	10" (254mm)	Swedged
E13-0244	1-1/2" NPS	12" (305mm)	Swedged

Note: All E13 series overflow tubes will only fit Model No. E18-1822 Stainless steel drain

Type 304 Stainless Steel, Schedule 40	
Model	**Size**
E19-0383	3/8" NPT x 3" (76mm)
E19-0384	3/8" NPT x 4" (102mm)
E19-0386	3/8" NPT x 6" (152mm)
E19-0123	1/2" NPT x 3" (76mm)
E19-0124	1/2" NPT x 4" (102mm)
E19-0126	1/2" NPT x 6" (152mm)
E19-0344	3/4" NPT x 4" (102mm)
E19-0346	3/4" NPT x 6" (152mm)
E19-0348	3/4" NPT x 8" (203mm)
E19-1003	1" NPT x 3" (76mm)
E19-1004	1" NPT x 4" (102mm)
E19-1006	1" NPT x 6" (152mm)
E19-1008	1" NPT x 8" (203mm)
E19-1123	1-1/2" NPT x 3" (76mm)
E19-1124	1-1/2" NPT x 4" (102mm)
E19-1126	1-1/2" NPT x 6" (152mm)
E19-2003	2" NPT x 3" (76mm)
E19-2004	2" NPT x 4" (102mm)
E19-1000	1" (25mm) Nipple Strainer

Type 304 Stainless Steel, Schedule 40	
Model	**Size**
E20-0380	3/8" NPT
E20-0120	1/2" NPT
E20-0340	3/4" NPT
E20-1000	1" NPT
E20-1120	1-1/2" NPT

Overflow Elbow	
Model	E48-4660

Overflow Head	
Model	E50-4580

Stainless Steel Strainer for Overflow Head	
Model	E50-X003

Mounting Screw for Strainer	
Model	E50-X004

Overflow Assembly for Sinkmate	
Model	E52-1000

ACCESSORIES FOR DRAINS

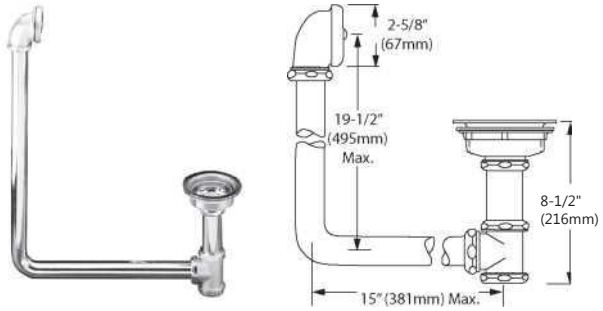

Stainless Steel Duo Basket Drains with Overflow Assembly			
Model	**Sink Opening**	**NPS**	**Face Flange Dia**
E40-4890	3-1/2" (89mm)	1-1/2"	4-1/2" (114mm)
E40-4895*	3-1/2"(89mm)	1-1/2"	4-1/2" (114mm)

Note: Furnished with overflow, brass tubing, "T" joint, coupling nuts, gaskets and sealing washers.
Type 18-8 stainless steel

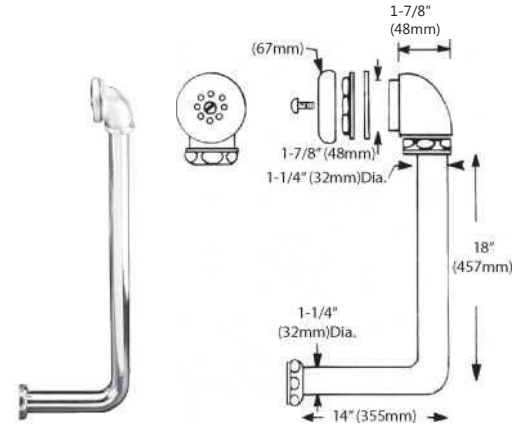

Optional Overflow Assembly for Lever, Twist & Rotary Drains

Model E50-1000

• Brass nickel plated w/stainless steel faceplate Brass nickel plated elbow 1-1/4" (32mm) O.D. tubing • 1-5/16" (49mm) Dia. opening required slip fit for 1-1/4" (32mm) O.D. tubing

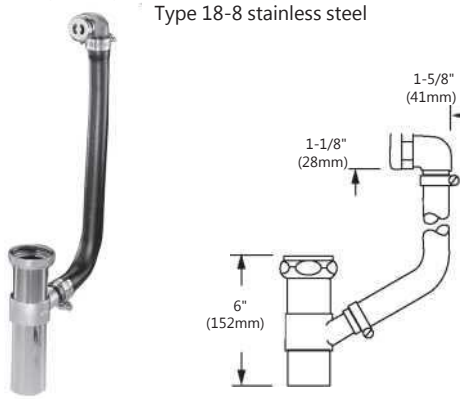

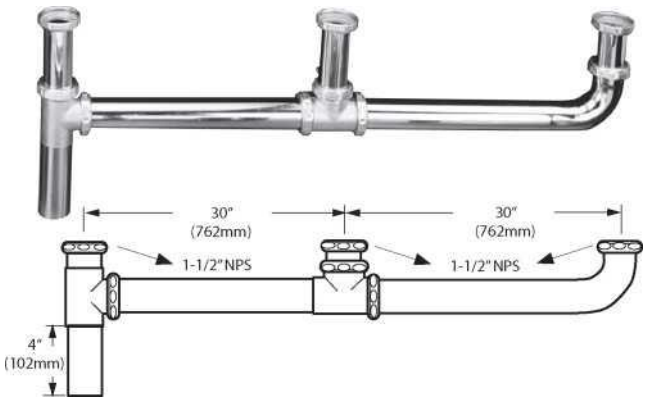

Optional Overflow Assembly for 1-1/2" (38mm) Drains		Universal Continuous Waste	
Model E51-1		**Model**	E30-7703

For use with lever/twist handle drains, basket drains and sink drains • Rubber O-ring • Economical • Easy installation • Eliminates overflow tubes • Maximizes sink space

Overflow consists of nickel plated brass branch tailpiece sub assembly, (2) stainless steel clamps, 32" (815mm) long rubber hose and chrome plated ABS overflow head. 7/8 hole punch for overflow.

• Chrome plated brass • End outlet, 3 compartment

Overflow Head Assembly for Mini Lever Drain

Model E50-1010

Brass and Nickel Plated Brass Tailpiece Assemblies for 1-1/2" (38mm) and 2" (51mm) Drains			
Model	**Size**	**Length**	**Material**
E22-4070	1" NPS	2" (51mm)	Brass
E22-4071	1" NPS	2" (51mm)	Brass N.P.
E22-4120	1-1/2" NPS	4" (102mm)	Brass
E22-4121	1-1/2" NPS	4" (102mm)	Brass N.P.
E22-4130	2" NPS	4" (102mm)	Brass
E22-4131	2" NPS	4" (102mm)	Brass N.P.

Note: All tailpieces are furnished with gasket and slipnut.

Iwo Group s.r.o.
IČO: 27558843
DIČ: CZ27558843

IMPERA PARK Hovorčovice
Hlavní 828,Hovorčovice
250 64, Česká republika

+420 602 558 254
www.iwogroup.eu
sales@iwogroup.eu